United States Patent

[11] **3,599,713**

[72] Inventor **Thomas D. Jenkins**
Harvey, La.

[21] Appl. No. **856,116**
[22] Filed **Sept. 8, 1969**
[45] Patented **Aug. 17, 1971**
[73] Assignee **Fishing Tools, Inc**

[54] **METHOD AND APPARATUS FOR CONTROLLING THE FILLING OF DRILL PIPE OR THE LIKE WITH MUD DURING LOWERING THEREOF**
6 Claims, 2 Drawing Figs.

[52] **U.S. Cl.** **166/224,** 175/317
[51] **Int. Cl.** **E21b 41/00**
[50] **Field of Search** 166/224, 177, 164; 175/317, 320

[56] **References Cited**

UNITED STATES PATENTS

2,616,502	11/1952	Lenz	166/224 X
2,638,167	5/1953	Jones	166/224 X
2,799,349	7/1957	Clark	166/244
2,855,943	10/1958	Moller et al.	166/224 X
3,029,875	4/1962	Moller	166/224
3,123,517	3/1964	Davis	166/224

Primary Examiner—David H. Brown
Attorney—Pravel, Wilson & Matthews

ABSTRACT: A method and apparatus for controlling the filling of drill pipe or the like with mud or other liquid during the lowering thereof into a pipe or casing having the mud or other liquid therein so as to prevent or inhibit such mud or liquid from spilling onto the derrick floor, and for subsequently opening the drill pipe to a full inside diameter for performing well operations therethrough.

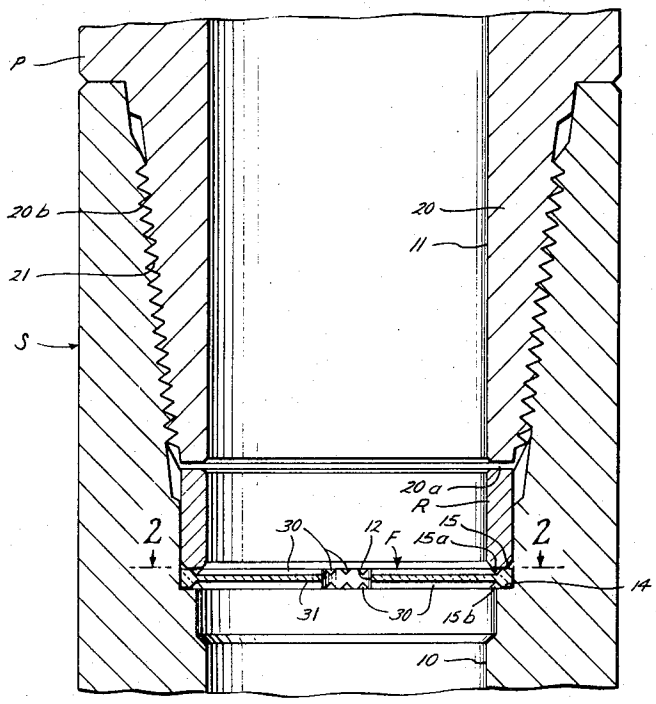

Fig. 1

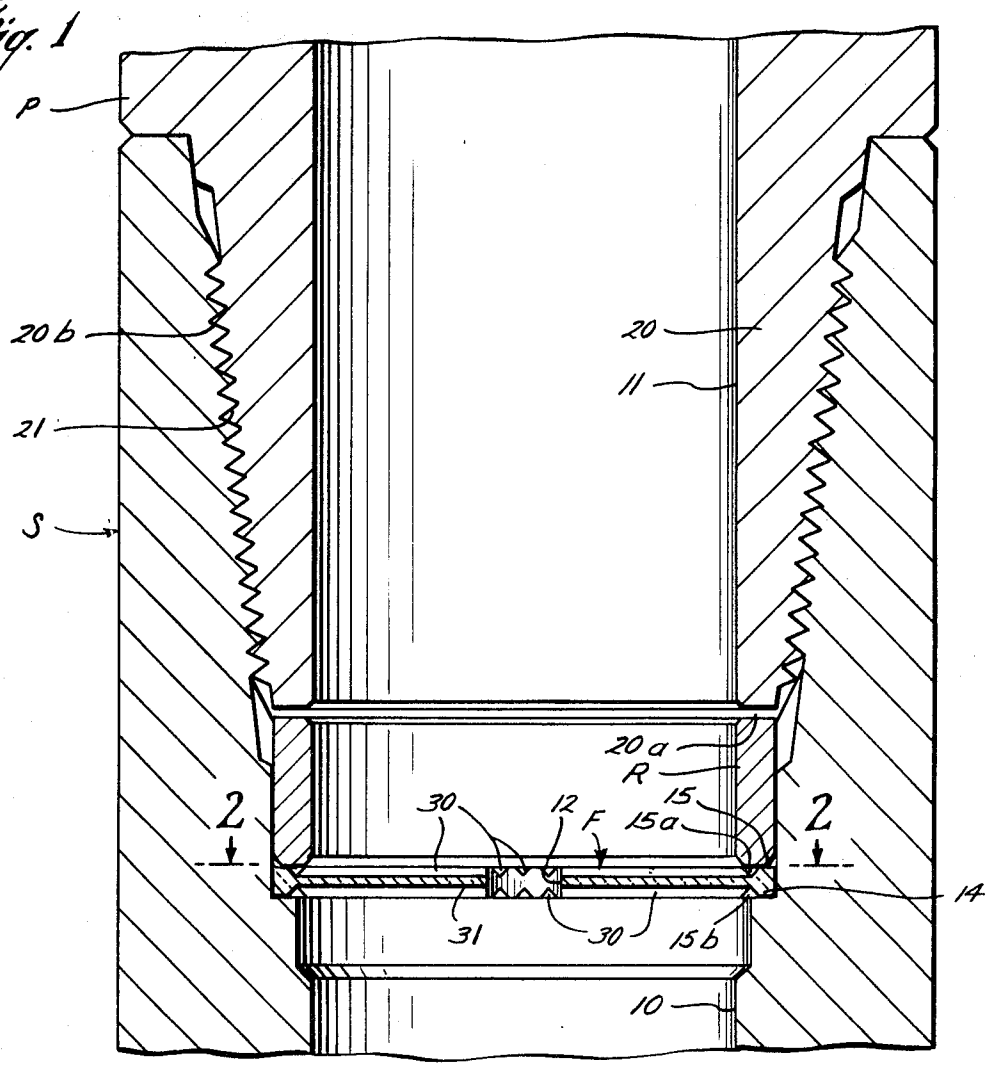

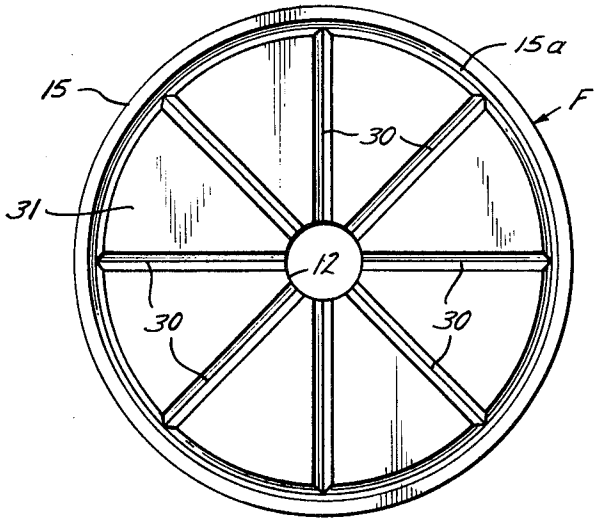

Fig. 2

Thomas D. Jenkins
INVENTOR

BY

Pravel Wilson & Matthews
ATTORNEYS

METHOD AND APPARATUS FOR CONTROLLING THE FILLING OF DRILL PIPE OR THE LIKE WITH MUD DURING LOWERING THEREOF

BACKGROUND OF THE INVENTION

The field of the invention is methods and apparatus for controlling the filling of drill pipe or the like during the lowering thereof into well pipe or casing having mud or other liquids therein.

Heretofore, when drill pipe has been run into a well pipe or casing having drilling mud or other liquid therein, the mud or other liquid has often been forced upwardly through the drill pipe during the lowering of such pipe, resulting in a spilling of the mud or liquid on the derrick floor of the well. Such mud or liquid on the derrick floor is extremely dangerous because it is very slippery and therefore, it presents a hazard to the men working on the derrick floor. The hazard is increased because of the usually high location of the derrick floor above the ground, so that if a man slips on the derrick floor, he could fall to the ground some 15 to 20 feet below. In addition, the mud used in drilling is relatively expensive and the loss of the mud by the spilling out at the derrick floor with prior art procedures is costly, even if no accidents to the personnel occur.

In some instances, the spilling of mud on the derrick floor has been controlled in the past by a removable bleedoff valve which has been threaded into each stand of pipe before lowering, and then after checking for pressure buildup, has been unthreaded after the stand is lowered and the slips are set. Such procedure has not only been time consuming, but it has also been dangerous since the bleedoff valve is large and heavy and sometimes has fallen on the men working on the rig.

SUMMARY OF THE INVENTION

The present invention relates to a method and apparatus for controlling the filling of drill pipe or the like with mud or other liquid in a well pipe or casing as the drill pipe is lowered therein, and for subsequently opening the drill pipe to its full bore so that well tools may pass therethrough without obstruction.

The method is carried out by installing a special sub on the lower end of drill pipe, tubing, or other pipe string or above a washover pipe or any tool such as an overshot to be lowered into a well pipe or casing having drilling mud or other liquid therein, wherein such sub has a frangible choke which permits a restricted amount of the drilling mud or liquid to flow into the pipe string or tools as it is lowered, and which is adapted to be sheared and pumped out by fluid pressure supplied from the surface downwardly through the pipe string or tool so as to thereafter provide a full-open bore in the sub.

BRIEF DESCRIPTION OF THE DRAWING

FIG. **1** is a vertical sectional view illustrating the form of the apparatus of this invention; and

FIG. **2** is a plan view taken on line **2–2** of FIG. **1** to further illustrate the invention.

DESCRIPTION OF THE PREFERRED EMBODIMENT

In the drawings, the letter S designates generally the adapter sub or body of the apparatus of this invention which is utilized for controlling the filling of a drill pipe string or other pipe string during the lowering of same into a well pipe or casing having drilling mud or other liquids therein. Only the upper portion of the sub S is illustrated in FIG. **1**, and it is shown connected to the lower portion of the drill string or other pipe string P.

In the preferred form of the invention, the apparatus includes a frangible disk F which is made of any suitable frangible materials such as plastic, glass or brittle metals. The frangible disk F is disposed across the full width of the bore **10** of the sub S so as to also close the bore **11** of the pipe string P

thereabove. However, the frangible disk F has one or more orifice ports or choke openings **12** therethrough so as to provide a restricted flow of mud or other liquid in a well pipe upwardly through such orifice port or choke opening **12** and into the bore **11** of the pipe string P at a controlled rate. The amount of the mud or liquid which passes through the port or ports **12** depends upon the size of the port or ports and the rate at which the pipe string P is lowered into the mud or other liquid in the well pipe (not shown). The restriction provided by the orifice port or ports **12** should be enough to prevent the mud or other liquid which enters the bore **11** from spilling over at the upper end of the pipe string P to thereby prevent such mud or other liquid from spilling onto the floor of the well derrick. On the other hand, the size of the orifice port or ports **12** must be great enough to permit some of the mud or liquid to enter and substantially fill the pipe string P to facilitate the lowering of the pipe string P into the mud or liquid. If such filling does not occur, and the lower end of the pipe string P were completely closed off, the air within the pipe string P would render it buoyant and it would tend to float in the drilling mud or other liquid within the well pipe so as to make it difficult to lower the pipe string P in the well pipe.

The frangible disk F is preferably disposed on an annular shoulder **14** within the bore **10** of the sub or body S. Such shoulder **14** may be machined in the top of an existing rotary sub or in the top sub in an overshot, washover safety joint or other similar tools that are run at the lower end of a pipe stand. The sub or body S is normally disposed at or near the lower end of the pipe string P, although it could be located at an intermediate point in the pipe string P for receiving only a partial benefit of the present invention.

The upper annular edge **15** of the frangible disk F is engaged by a spacer ring R which is disposed below the lower annular end **20*a*** of the lower portion of the threaded pin **20** at the lower end of the pipe string P.

The sub S has a threaded box formed at its upper end which has internal threads **21** formed therein for threaded engagement with external pin threads **20*b*** on the lower threaded pin **20** of the pipe string P. The sub S and the pin **20** are made up so that the lower end **20*a*** of the pin **20** is spaced above the ring **20**, whereby the frangible disk F is confined in its seated position on the shoulder **14** (FIG. **1**), but is not normally clamped under any compression. Such construction allows some latitude for variations in the lengths of the pin **20** which is used.

The frangible disk F preferably is formed with a plurality of V-shaped notches **30** in the body **31**. The central opening **12**, usually about one-half inch in diameter, provides for fluid flow through the disk F, as will be more fully explained. The entire frangible disk F may be molded or otherwise preformed into a unitary element or unit for insertion into position as shown in FIG. **1**.

The disk F preferably has an annular V-shaped groove **15*a*** and a lower annular V-shaped groove **15*b*** which together with the grooves **30**, serve as weakened areas for facilitating the fracturing of the disk F into small pieces when such fracturing is desired. Normally, the fracturing of the disk F occurs by the pumping of fluid under pressure downwardly through the bore **11** of the pipe string P, as will be more evident hereinafter.

In carrying out the method of this invention, a drill string or pipe string P is provided with the sub S at or near its lower end, and frangible disk F is disposed within the sub S as illustrated in FIG. **1** and as described above. Thereafter, the pipe string with the frangible disk F at or near its lower end is lowered into the mud or other liquid in a well pipe or casing of any conventional construction (not shown). As the pipe string P is forced downwardly into the mud or liquid, either by its own weight or by additional force, the mud or other liquid within the well pipe is caused to move through the orifice or choke opening or openings **12** in the frangible disk F so that such mud or liquid enters the bore of the pipe string P. Because of the predetermined size of the opening or openings **12**, the mud

or other liquid in the well pipe is restricted in its flow into the bore **11** of the pipe string P so that it does not fill same so fast that it spills over the upper end of the pipe string P. Thus, enough of the mud or liquid enters the pipe string P to prevent it from being buoyant or floating in the mud or other liquid in the well pipe, but at the same time, the amount of mud or other liquid is controlled so that it does not create a danger or hazard by spilling out onto the derrick floor from the upper end of the pipe string P.

When the pipe string P has been lowered to its desired elevation in the well pipe, the frangible disk is then fractured or sheared into relatively small pieces. This can be done mechanically, but in the present invention, it is preferably done by developing a relatively high fluid pressure within the bore of the pipe string, utilizing fluid pumps at the surface of the well. The pump pressure within the pipe string P will thus be sufficient to rupture and break the frangible disk F into small pieces which can then be washed downwardly below the pipe string P so as to leave the full bore **11** and the full bore **10** open for the subsequent passage of well tools or other operations in the well. For example, the sub with the frangible disk F and spacer R may be installed at the lower end of a string of drill pipe just above a washover string. After the pipe is lowered to a predetermined depth in the vicinity of a stuck pipe or fish, the disk F is fractured to give the full opening through the sub. The stuck pipe or fish is then washed over as the pipe is lowered, and thereafter a wire line tool such as a free point indicator is run downwardly through the string and into the stuck pipe or fish to determine if it has been loosened by the washover operation.

It should also be noted that the frangible disk F may be sheared by pump pressure should the hole **12** become plugged with debris. If such shearing is necessary, a new sub with a new frangible disk F is installed and the operation is continued.

The foregoing disclosure and description of the invention are illustrative and explanatory thereof, and various changes in the size, shape, materials as well as in the details of the illustrated construction may be made without departing from the spirit of the invention.

I claim:

1. A method of controlling the filling of a pipe string during the lowering thereof in a well pipe having liquid therein, comprising the steps of:

disposing a frangible choke near the lower end of a pipe string;

lowering the pipe string into the liquid in the well pipe;

forcing liquid in restricted amounts through the frangible choke into the pipe string as the pipe string is lowered while avoiding overflowing the liquid from the upper end of the pipe string; and

thereafter removing the frangible choke to provide a fully open bore through the pipe string.

2. The method set forth in claim **1**, wherein the removing of the frangible choke includes:

pumping fluid under pressure into the pipe string so as to develop a predetermined pressure to fracture the frangible choke and pump the pieces thereof outwardly from the pipe string.

3. An apparatus for controlling the filling of a pipe string during the lowering thereof in a well pipe having liquid therein, comprising:

a pipe string having a bore which is open throughout its full length;

a sub in said pipe string and having means for connecting same near the lower end of the pipe string;

choke means mounted in said sub for controlling fluid flow upwardly into said pipe string and constituting the only restriction to flow into the pipe string;

said choke means including a frangible disk made of a material which is adapted to be broken into relatively small pieces and disposed in said sub and extending across the full width of the bore of said sub to close fluid flow through the bore and the pipe string;

means for retaining said frangible disk in said sub; and

said frangible disk having a restricted choke opening therethrough of a diameter smaller than the diameter of the pipe string in which it is mounted for the flow of liquid through said frangible disk and into said pipe string upon a lowering of said pipe string in the liquid in the well pipe.

4. The structure set forth in claim **3**, wherein:

said frangible disk has a plurality of weakened areas capable of withstanding the force of fluid therebelow during the lowering of the drill string into the well pipe but being weak enough to shear upon the application of a predetermined fluid force within the pipe string.

5. The structure set forth in claim **3**, wherein:

said sub has an upper internally threaded box which is adapted to receive an externally threaded pin on the pipe string; and

said sub has an annular shoulder below said threaded box upon which said frangible disk is disposed.

6. The structure set forth in claim **6**, wherein:

said means for retaining said frangible disk in said sub includes a spacer ring disposed between the outer annular edge of said frangible disk and the lower end of said threaded pin.