(12) INTERNATIONAL APPLICATION PUBLISHED UNDER THE PATENT COOPERATION TREATY (PCT)

(19) World Intellectual Property Organization
International Bureau

(43) International Publication Date
20 November 2014 (20.11.2014)

WIPO | PCT

(10) International Publication Number
WO 2014/186536 A3

(51) International Patent Classification:
B65D 65/46 (2006.01) *A23L 1/212* (2006.01)
B65D 25/04 (2006.01)

(21) International Application Number:
PCT/US2014/038123

(22) International Filing Date:
15 May 2014 (15.05.2014)

(25) Filing Language: English

(26) Publication Language: English

(30) Priority Data:
61/855,396 15 May 2013 (15.05.2013) US

(72) Inventors; and
(71) Applicants : **TRINH, Albert, Long** [US/US]; 8671 Creekwood Lane, Maineville, OH 45039 (US). **TRINH, Dennis, Sam** [US/US]; 8671 Creekwood Lane, Maineville, OH 45039 (US). **TRINH, Toan** [US/US]; 8671 Creekwood Lane, Maineville, OH 45039 (US).

(74) Agent: **NESBITT, Daniel, F.**; Hasse & Nesbitt LLC, 8837 Chapel Square Drive, Suite C, Cincinnati, OH 45249 (US).

(81) Designated States *(unless otherwise indicated, for every kind of national protection available)*: AE, AG, AL, AM, AO, AT, AU, AZ, BA, BB, BG, BH, BN, BR, BW, BY, BZ, CA, CH, CL, CN, CO, CR, CU, CZ, DE, DK, DM, DO, DZ, EC, EE, EG, ES, FI, GB, GD, GE, GH, GM, GT, HN, HR, HU, ID, IL, IN, IR, IS, JP, KE, KG, KN, KP, KR, KZ, LA, LC, LK, LR, LS, LT, LU, LY, MA, MD, ME, MG, MK, MN, MW, MX, MY, MZ, NA, NG, NI, NO, NZ, OM, PA, PE, PG, PH, PL, PT, QA, RO, RS, RU, RW, SA, SC, SD, SE, SG, SK, SL, SM, ST, SV, SY, TH, TJ, TM, TN, TR, TT, TZ, UA, UG, US, UZ, VC, VN, ZA, ZM, ZW.

(84) Designated States *(unless otherwise indicated, for every kind of regional protection available)*: ARIPO (BW, GH, GM, KE, LR, LS, MW, MZ, NA, RW, SD, SL, SZ, TZ, UG, ZM, ZW), Eurasian (AM, AZ, BY, KG, KZ, RU, TJ, TM), European (AL, AT, BE, BG, CH, CY, CZ, DE, DK, EE, ES, FI, FR, GB, GR, HR, HU, IE, IS, IT, LT, LU, LV, MC, MK, MT, NL, NO, PL, PT, RO, RS, SE, SI, SK, SM, TR), OAPI (BF, BJ, CF, CG, CI, CM, GA, GN, GQ, GW, KM, ML, MR, NE, SN, TD, TG).

Published:

— *with international search report (Art. 21(3))*

— *before the expiration of the time limit for amending the claims and to be republished in the event of receipt of amendments (Rule 48.2(h))*

(88) Date of publication of the international search report:
8 January 2015

(54) Title: HEALTHY SANDWICH PRODUCT

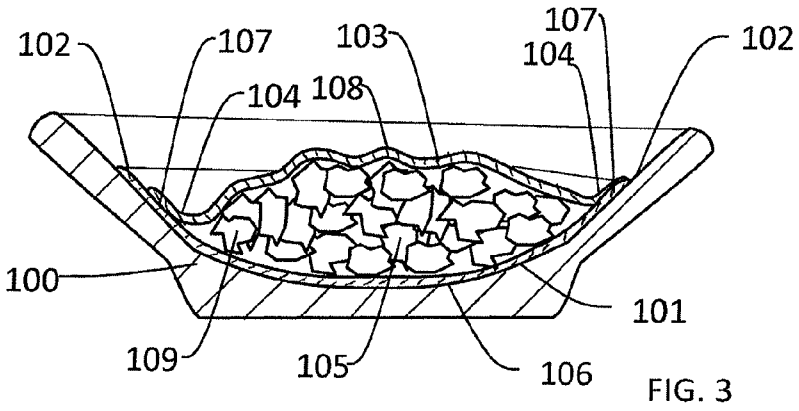

FIG. 3

(57) Abstract: New sandwich product, particularly a fast food sandwich product that contains appreciable amounts of salad ingredients, and to a salad insert suitable for use in such sandwich product to improve the diet of the consumer. The sandwich product can include a layer of a meat or protein portion with the layer of a wrapped salad portion that are placed on or enclosed between a bread portion. The wrapped salad portion uses an edible wrapper to enclose the salad ingredients. The edible wrapper can be an edible processed wrapper such as rice paper or soy paper, or an edible natural wrapper such as a lettuce leaf or cabbage leaf, or a combination thereof.

WO 2014/186536 A3

INTERNATIONAL SEARCH REPORT

International application No.
PCT/US14/38123

A. CLASSIFICATION OF SUBJECT MATTER
IPC(8) - B65D 65/46, 25/04; A23L1/212 (2014.01)
CPC - B65D 65/46, 65/463; A23L 1/0067
According to International Patent Classification (IPC) or to both national classification and IPC

B. FIELDS SEARCHED

Minimum documentation searched (classification system followed by classification symbols)
IPC(8): A23L1/00, 1/212; B65D 25/04, 65/46 (2014.01)
CPC: A23L 1/0067, 1/007; B65D 65/46, 65/463 USPC: 426/115, 138, 410, 415

Documentation searched other than minimum documentation to the extent that such documents are included in the fields searched

Electronic data base consulted during the international search (name of data base and, where practicable, search terms used)
MicroPatent (US-G, US-A, EP-A, EP-B, WO, JP-bib, DE-C,B, DE-A, DE-T, DE-U, GB-A, FR-A); Google Scholar; Google; ProQuest; edible, comestible, eatable, wrapper, covering, paper, leaf, shell, enclosing, surrounding, encompassing, holding, containing, comprising, salad, lettuce, onions, cucumber, tomatoes, pepper, mushroom, cheese, nuts, olives, mushrooms, products, ingredients, burger, romaine

C. DOCUMENTS CONSIDERED TO BE RELEVANT

Category*	Citation of document, with indication, where appropriate, of the relevant passages	Relevant to claim No.
X --- Y	US 5,853,778 A (MAYFIELD, WG) 29 December 1998; abstract; column 3, lines 26-32; column 4; lines 1-17, 33-65; column 5, lines 1-4, 25-39, 51-54; column 6, lines 2-16, 27-55; column 7, lines 5-24, 40-50; column 8, lines 47-49; figures 1A, 2; claims 1-3, 9-12	1, 3-5,11, 20, 22-23, 25-28, 33 --- 2, 6-10, 12-17, 21, 24, 30-32, 34-37, 39-46
Y	GB 2 457 957 A (POLLARD, D et al.) 02 September 2009; abstract; page 1, lines 30-32, page 2, line 19; figure 3; claims 3, 5	2, 7-10, 15, 21, 24, 34-37, 39-42
Y	US 2006/0134273 A1 (PROPER, KV et al.) 22 June 2006; paragraphs [0007]-[0008], [0069], [0076]-[0079], [0083]-[0085]	6-9, 12, 30-32, 39-46
Y	US 2002/0034475 A1 (RIBI, HO) 21 March 2002; paragraphs [0122], [0129]	12, 16-17, 37, 45-46
Y	US 2010/0306872 A1 (MOOR, CM) 02 December 2010; paragraphs 12, 19, 21, 25; claim 1	40-41
Y	US 4,795,648 A (CAPY, G et al.) 03 January 1989; column 2, lines 3-5; column 3, lines 17-28, 42-45; claims 1, 36	13-14
A	US 4,765,998 A (PAK, TS et al.) 23 August 1988; abstract; column 1, lines 65-68; column 2, lines 21-23, 48-51; figures 1, 3-5; claim 1	1-18, 19-46
A	US 4,938,981 A (HEE, DL) 03 July 1990; abstract; column 4, lines 22-24; column 5, lines 35, 43; figure 1; claim 1	1-18, 19-46
E, Y	US 8,727,171 B1 (ONG, M) 20 May 2014; entire document	1-18, 19-46

☐ Further documents are listed in the continuation of Box C. ☐

* Special categories of cited documents:
"A" document defining the general state of the art which is not considered to be of particular relevance
"E" earlier application or patent but published on or after the international filing date
"L" document which may throw doubts on priority claim(s) or which is cited to establish the publication date of another citation or other special reason (as specified)
"O" document referring to an oral disclosure, use, exhibition or other means
"P" document published prior to the international filing date but later than the priority date claimed
"T" later document published after the international filing date or priority date and not in conflict with the application but cited to understand the principle or theory underlying the invention
"X" document of particular relevance; the claimed invention cannot be considered novel or cannot be considered to involve an inventive step when the document is taken alone
"Y" document of particular relevance; the claimed invention cannot be considered to involve an inventive step when the document is combined with one or more other such documents, such combination being obvious to a person skilled in the art
"&" document member of the same patent family

Date of the actual completion of the international search	Date of mailing of the international search report
20 August 2014 (20.08.2014)	06 NOV 2014
Name and mailing address of the ISA/US Mail Stop PCT, Attn: ISA/US, Commissioner for Patents P.O. Box 1450, Alexandria, Virginia 22313-1450 Facsimile No. 571-273-3201	Authorized officer: Shane Thomas PCT Helpdesk: 571-272-4300 PCT OSP: 571-272-7774

Form PCT/ISA/210 (second sheet) (July 2009)

INTERNATIONAL SEARCH REPORT

International application No.
PCT/US14/38123

Box No. II Observations where certain claims were found unsearchable (Continuation of item 2 of first sheet)

This international search report has not been established in respect of certain claims under Article 17(2)(a) for the following reasons:

1. ☐ Claims Nos.:
because they relate to subject matter not required to be searched by this Authority, namely:

2. ☐ Claims Nos.:
because they relate to parts of the international application that do not comply with the prescribed requirements to such an extent that no meaningful international search can be carried out, specifically:

3. ☐ Claims Nos.:
because they are dependent claims and are not drafted in accordance with the second and third sentences of Rule 6.4(a).

Box No. III Observations where unity of invention is lacking (Continuation of item 3 of first sheet)

This International Searching Authority found multiple inventions in this international application, as follows:

-***-Please See Supplemental Page-***-

1. ☐ As all required additional search fees were timely paid by the applicant, this international search report covers all searchable claims.

2. ☐ As all searchable claims could be searched without effort justifying additional fees, this Authority did not invite payment of additional fees.

3. ☐ As only some of the required additional search fees were timely paid by the applicant, this international search report covers only those claims for which fees were paid, specifically claims Nos.:

4. ☒ No required additional search fees were timely paid by the applicant. Consequently, this international search report is restricted to the invention first mentioned in the claims; it is covered by claims Nos.:
Group I: Claims 1-18 and 20-46

Remark on Protest

☐ The additional search fees were accompanied by the applicant's protest and, where applicable, the payment of a protest fee.

☐ The additional search fees were accompanied by the applicant's protest but the applicable protest fee was not paid within the time limit specified in the invitation.

☐ No protest accompanied the payment of additional search fees.

INTERNATIONAL SEARCH REPORT

International application No.
PCT/US14/38123

-***-Continued from Box III: Observations where unity of invention is lacking-***-

-Continued from 1. (ii):

This application contains the following inventions or groups of inventions which are not so linked as to form a single general inventive concept under PCT Rule 13.1. In order for all inventions to be examined, the appropriate additional examination fees must be paid.

Group I: Claims 1-18 and 20-46 are directed toward wrapped salad products and a method for preparing the products.

Group II: Claim 19 is directed toward a method for loosening and safely removing the iceberg lettuce leaves from a lettuce head.

Group III: Claim 47 is directed toward a method for handling or stacking of a wrapped product.

Group IV: Claims 48-49 are directed toward methods for improving the resistance to drying of a moistened rice paper.

Group V: Claim 50 are directed toward a method for improving the tackiness and stickiness of handling a wrapper product.

The inventions listed as Groups I-V do not relate to a single general inventive concept under PCT Rule 13.1 because, under PCT Rule 13.2, they lack the same or corresponding special technical features for the following reasons: the special technical features of Group I include a sandwich product combining a meat or protein portion layer and a wrapped salad portion layer that are enclosed between a bread portion, wherein the wrapped salad portion layer comprises an edible wrapper enclosing one or more salad ingredients, and a method for preparing a wrapped salad portion, comprising the steps: (1) placing a first edible wrapper on a flat or concave surface of a template; (2) placing a plurality of salad ingredients into a heap in a middle portion of the first edible wrapper; (3) optionally adding a salad dressing to the salad ingredients; (4) folding at least one edge of the first edible wrapper over the salad ingredients, to fully enclose the salad ingredients within the edible wrapper to form the wrapped salad portion; and (5) releasing the wrapped salad portion from the template, which are not present in Groups II-V; the special technical features of Group II include a method for loosening and safely removing the iceberg lettuce leaves from a lettuce head comprises at least one of the steps of: (1) coring the central stem to which the leaves are attached using a sharp pointed and thin-bladed serrated knife, a powered long drill bit, or other sharp bladed devices to cut a cone shaped portion of the central stem to release the leaves; (2) heating the whole head of lettuce whose central stem has been removed in a microwave oven at full power for about 30 sec to about 1 min to make the outside leaves warm and somewhat softened and more resilient, but not completely wilted, and optionally still crunchy enough to be readily bitten; (3) removing about two or four leaves as treated in step (2) one by one from the lettuce head; (4) heating the lettuce head resulting from step (3) as in step (2); and (5) repeating the method until all the suitable leaves for forming a wrap are removed, which are not present in Groups I and III-V; the special technical features of Group III a method for handling or stacking of a wrapped product comprising a moistened rice paper, comprising the step of placing a sheet of a wax paper or similar release paper, under, over or between adjacent wrapper products, to prevent sticking and to improve handling in the assembly or storage of the wrapped product, which are not present in Groups I-II and IV-V; the special technical features of Group IV include a method for improving the resistance to drying of a moistened rice paper, comprising the step of adding an edible humectant into the source of water used for moistening a dried sheet of a rice paper, and moistening the rice paper in the source of water comprising the edible humectants, and the step of placing an edible product made with a rice paper wrapper into a humidifier, which are not present in Groups I-III and V; the special technical features of Group V include a method for improving the tackiness and stickiness of handling a wrapper product wrapped in moistened rice paper, comprising placing a nitrile glove on the hand or hands used to handle the moistened rice paper and the wrapper product made therefrom, which are not present in Groups I-IV.

The common technical features of Groups I-V are an edible wrapped product; lettuce; and handling a wrapped product comprising a moistened rice paper.

These common technical features are disclosed by the book 'The Maui Onion Cookbook' by (SANTOS). Santos discloses an edible wrapped product (Maui onion rice paper spring rolls; page 12); lettuce (8 lettuce leaves; page 12); and handling a wrapped product comprising a moistened rice paper (soak rice paper in water (moistened) and roll (handle) each rice paper like a burrito; page 13).

Since the common technical features are previously disclosed by Santos, these common features are not special and so Groups I-V lack unity.