Jan. 2, 1934. D. S. GUSTIN ET AL 1,941,984

CUT-OUT FOR SERIES LAMPS

Original Filed June 18, 1929

Fig. 1.

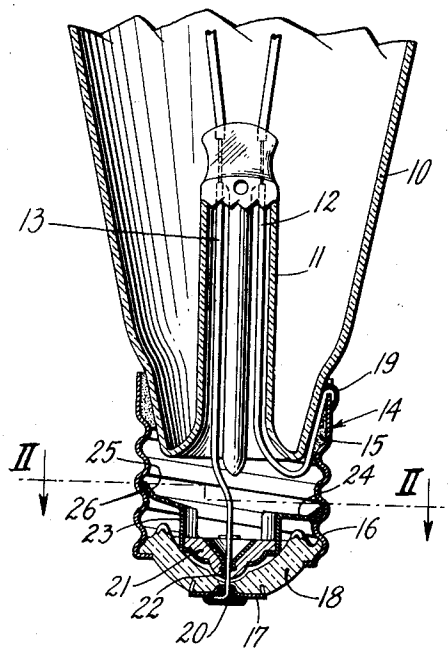

Fig. 2.

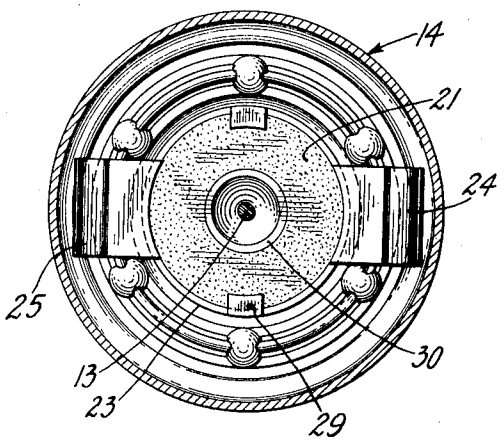

Fig. 3.

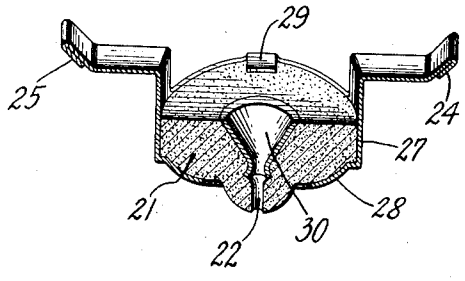

Fig. 4.

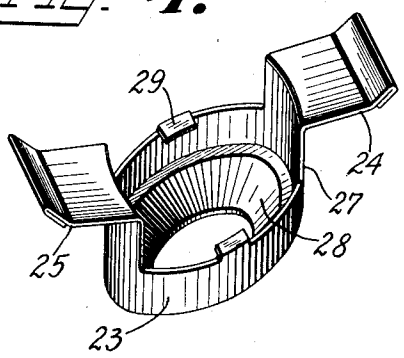

INVENTORS
D. S. GUSTIN
E. DIETZ
BY M. F. Regee
ATTORNEY

Patented Jan. 2, 1934 1,941,984

UNITED STATES PATENT OFFICE

1,941,984

CUT-OUT FOR SERIES LAMPS

Daniel S. Gustin and Ewald Dietz, Bloomfield, N. J., assignors to Westinghouse Lamp Company, a corporation of Pennsylvania

Original application June 18, 1929, Serial No. 371,821. Divided and this application September 10, 1931. Serial No. 562,038

8 Claims. (Cl. 176—24)

This invention relates to the manufacture of incandescent electric lamps which are burned when connected in series and is a division of application Serial No. 371,821 filed June 18, 1929.

In certain types of incandescent lamps such for example as lamps employed for our lighting, street series or for Christmas tree lighting, a given number of lamps are connected so that the combined voltage of the lamps is equal to the voltage of current supply.

It has been found that when using a plurality of lamps connected in series considerable inconvenience occurs upon the failure of one of the lamps if a filament breaks or the lamp structure otherwise fails to operate since such failure terminates the continuity of the circuit and the rest of the lamps are extinguished. It is difficult to determine by inspection which lamp has failed and it becomes necessary, in order to select the lamp which is defective, to test by trial until the defective lamp has been discovered, which procedure is obviously time consuming and inconvenient.

The present invention provides a lamp of the series type in which a means is provided as an integral part of a base to permit a flow of current upon the failure of the filament or other defect which might prevent the normal flow of current through the lamp. By the provision of the said means the lamp which fails may be immediately detected inasmuch as the remaining lamps will continue in operation.

Mediums of various characters have heretofore been proposed for the purpose above set forth but have not been found entirely satisfactory from a practical standpoint. For example, it has been suggested to use aluminum powder disposed within a lamp stem so as to be in contact with the two leading-in conductors which supply electrical energy to the filament.

The aluminum powder functioned as a cut out medium which was normally resistant to the flow of current at a given voltage by reason of an oxide film surrounding each particle of the powder. Upon a failure of the filament, however, the full voltage of the lamp being impressed upon the powder, the oxide film was broken down causing current to flow from one lead to the other. Various other materials may have been proposed in which an oxide forms around the particles. It has been found that particles having thereon what might be termed, a naturally formed oxide, provide an insulating layer of either too great or too small degree for practical commercial purposes.

Atmospheric conditions play an important part in determining the resistability of the oxide insulation and thus an uncontrolled variable exists which makes it impossible to provide a reliable and positively operable device. Other materials of a nature very similar to aluminum powder have been employed and it has been proposed to use a cut out material in which copper powder is treated so that the particles thereon became coated with a layer of copper sulphide. This material which did not depend upon a natural oxide on the particles of the powdered material gave satisfactory and reliable results; the present invention is, however, in the nature of an improvement over materials such as the copper sulphide coated copper particles.

In practicing the present invention a cut out element is formed of finely divided copper powder impregnated with or the particles thereof coated with sodium silicate. The powdered copper particles may or may not have a layer of an oxide thereon. Preferably the particles are clean or free from oxide when coated with sodium silicate.

It has been found that by combining sodium silicate and powdered copper a cut out element in the form of a pellet or button may be constructed by the application of pressure to the powder when in a suitably formed mold. The proportion of sodium silicate to the copper powder may vary in accordance with the voltage of the lamp. It has been found, however, that for use in lamps of from 8 to 70 volts the following procedure will give a practical cut out element: 100 grams of metallic copper powder of No. 150 mesh are mixed with 15 grams of 1.55 specific gravity sodium silicate containing approximately 14% alkali and dehydrated at 130° centigrade and stirred for 16 hours, after which the mixture is screened through 60 mesh screen. A button or pellet is then formed from this mixture by taking 100 grams of the same and adding thereto 12 grams of sodium silicate and applying a pressure of 3200 pounds per square inch and drying at 180° centigrade for 3 hours.

The break down voltage of a pellet formed by the above method may be varied, for example, an increase of pressure lowers the break down voltage, whereas less pressure will raise the break down voltage so that a pellet may be made for a given break down voltage for use in a given type of lamp.

It will be understood that when producing a cut out medium in accordance with the above method the metallic powder when mixed with

sodium silicate and dried while in loose powder form, may be used as a shunt or breakdown resistance in a lamp. If used in loose powder form the medium may be packed in the stem tube and around the lead wires so that upon a failure of current to pass the filament an overload will be impressed on the powder permitting a current flow.

When used in button or pellet form as a compact mass the dehydrated particles of metallic powder having a sodium silicate coating are combined by a binder of sodium silicate and compressed at the pressure of about 3200 pounds per square inch as above set forth.

It is believed that a heat treatment of the silicate and metallic particles results in coating the particles with a layer of a complex copper silicate which has been found to serve as an insulation of the required degree, i. e. one which will oppose a flow of current at a given voltage and break down at a predetermined excess voltage.

When a cut out medium of the present character is incorporated in a lamp and the filament fails, causing the electrical energy to flow across the cut out medium, a copper silicate slag is formed and a path provided over which the electrical energy flows.

Although copper powder and sodium silicate has been found preferable as a cut out, a medium for this purpose may be produced by using aluminum powder and sodium silicate or iron powder and sodium silicate may be used.

It will be understood that the present invention is directed broadly to the combination of an insulating material which is artificially applied to metallic particles as distinguished from a naturally produced layer of insulation as when an oxide forms naturally or is forced as by heat. The present invention may be practiced by using conductive particles encased in layers of insulating material such as a bakelite solution or other non-conductive varnishes or coatings may be used.

The application of the pellet to a lamp base will be more fully understood by reference to the accompanying drawing in which;

Fig. 1 is a vertical sectional view of a portion of a lamp bulb with a base attached thereto.

Fig. 2 is an enlarged transverse cross sectional view of the base taken on line II—II in Fig. 1.

Fig. 3 is a perspective view of a pellet and holder partly in cross section, and

Fig. 4 is a perspective view of a cup or supporting member for holding a pellet in position in a base.

Although the present material may be used as a cut out medium by disposing the same in various positions in a lamp, it has been found practical to employ the cut out material in the form of a pellet surrounding one of the lead wires of the lamp.

As illustrated a lamp 10 having the usual stem 11 and lead wires 12 and 13 may be connected to a base 14 by cement 15. The base 14 is generally composed of a shell 16 having a bottom contact member 17 supported in a ring 18 of insulative material such as glass. The lead wire 12 may be connected by solder 19 to the brass shell 16 and the leading in wire 13 may extend through the base and be secured by solder 20 to the contact 17.

In accordance with the present invention a pellet 21 is disposed in the base and the lead wire 13 extends through an aperture 22 in the pellet. The said pellet is carried in a support member or bracket 23 having spring arms 24 and 25 which extend outwardly and engage the internally threaded portion 26 of the base. By reason of the formation of the arms 24 and 25 the pellet may be screwed into the base and in contact with the insulative ring 18. The bracket 23 may be constructed in the form of a cup having an annular flange 27 and a bottom flange 28. A plurality of clips 29 may be provided to engage the pellet and hold it in position or the said clips may extend from the flange 27 and may be embedded in the pellet during its formation as when molded in the cup under pressure.

The lead wire 13 may extend through the aperture 22 of the pellet and make direct contact therewith. It has been found preferable, however, to provide the aperture 22 with a conical or flared mouth to receive the conical shaped metallic contact element 30. Thus the lead wire 13 may readily be threaded through the aperture 22 and it may engage with the contact 30. By reason of the said contact the effective contact area between the lead wire 13 and the pellet 21 is greater than would be the case if the lead wire made direct contact with the wall of the aperture 22. When a pellet has been incorporated in a base and the filament of the lamp fails so that the entire load is thrown across the pellet, current will flow from contact 17 through the lead 13 through contact element 30, thence through the pellet material and the metallic support 23 which is in direct contact with the shell 16. A complete circuit is thus provided and as the pellet offers the proper degree of resistance the continuity of the flow of energy would be maintained and the remaining lamps of the series will continue to operate. When producing a cut out element for the above purpose the method hereinbefore described may be utilized and the mixed sodium silicate and copper powder may be placed in the bracket or cup 23 and molded to form under the required pressure.

Although it has been found practical and convenient to use a disc or pellet it is obvious that the present material consisting of a metallic powder mixed with or impregnated with sodium silicate may be employed as a cut out in various ways. For example, the entire base may be filled with the cut out material or a quantity or body of the said material may be disposed within the stem 11 so as to surround the lead wires 12 and 13, and although the present illustration sets forth a preferred embodiment of the invention, other modifications may suggest themselves without departing from the spirit and scope of the present invention as set forth in the appended claims.

What is claimed is:

1. An incandescent electric lamp comprising a base, a pellet consisting of a compact mass of metallic powder and sodium silicate disposed in said base, a metallic support for said pellet, a lead wire of said lamp in contact with one portion of said pellet, an electrical conductor in contact with another portion of said pellet and in contact with said base, said support serving to carry said pellet and for holding said pellet removably within said base.

2. An incandescent electric lamp comprising a base, a pellet having a given electrical resistance, a metallic support for said pellet, said support and pellet constituting a unit for disposition in said base, means extending from said support for engagement with said base to hold said unit

and a lead wire of said lamp in contact with said pellet.

3. An incandescent electric lamp comprising a base, a removable resistance element including a disk resistant to the flow of electrical energy at a given voltage and a metallic support for said disk, said disk having an aperture to receive a contacting lead wire of said lamp and means for electrically connecting said support with said base.

4. A cut out element for an incandescent electric lamp comprising a compact mass of resistance material, a conductive member embedded in said mass and conductive members in electrical contact with said mass and extending therefrom for engagement with the wall of a lamp base.

5. A resistance element for disposition in the base of an incandescent electric lamp comprising a pellet of compact resistance material, a conductive member embedded in said pellet for contact with a lead wire of a lamp and conductive extensions for engaging the wall of said base to support said pellet and for electrically connecting said pellet with the base of said lamp.

6. A resistance element for a lamp base comprising a pellet of a resistance material, a contact element embedded in said material and supporting electrical conductors for electrically connecting and supporting said pellet in space relation to the wall of the base.

7. An incandescent electric lamp comprising a base, a disk resistant to the flow of electrical energy at a given voltage, metallic members extending from said disk to electrically connect and support said disk in spaced relation to the wall of said base and a tubular contact member embedded in said disk to receive a lead wire of said lamp.

8. An incandescent electric lamp comprising a base having a bottom contact, a resistance element consisting of a compact mass of resistance material, means for supporting said mass in spaced relation to the wall of the base, a metallic eyelet in said mass to provide a passage therethrough, one of the lead wires of said lamp extending through said eyelet and in electrical contact with the wall thereof, said lead wire being electrically connected to said bottom contact.

DANIEL S. GUSTIN.
EWALD DIETZ.