673364

AUSTRALIA

Patents Act 1990

NOTICE OF ENTITLEMENT

We, ALLERGAN, INC., of 2525 Dupont Drive, Irvine, California, 92715, United States of America, the Applicant in respect of Application No. 43959/93, state the following:

1 ALLERGAN, INC. is the Nominated Person in respect of the application.

2 The actual inventors of the invention, the subject of the application, are ZANGER, Frank; SURBER, Tim and LEHMER, Don.

3 The Nominated Person is entitled to the grant of a patent in respect of the application because the said Nominated Person derived title to the invention from the actual inventors by assignment.

4 The Nominated Person is entitled to claim priority from the application listed in the declaration under Article 8 of the PCT because the Nominated Person is the assignee of the applicant in respect of the application listed in the declaration under Article 8 of the PCT, and because the application was the first application made in a Convention country in respect of the invention.

Dated this 12th day of September, 1996.

A member of the firm of
DAVIES COLLISON CAVE
for and on behalf of the applicant.

AU9343959

(12) PATENT ABRIDGMENT (11) Document No AU-B-43959/93
(19) AUSTRALIAN PATENT OFFICE (10) Acceptance No 673364

(54) Title
PRESSURE TRANSDUCER INTERFACE

International Patent Classification(s)
(51)[5] G01L 009/14 A61F 009/00
(51)[3] A61B 005/03 G01L 019/00

(21) Application No. 43959/93 (22) Application Date 27.05.93

(87) PCT Publication Number WO93/24817

(30) Priority Data

(31) Number	(32) Date	(33) Country
893331	03.06.92	US UNITED STATES OF AMERICA

(43) Publication Date 30.12.93

(44) Publication Date of Accepted Application 07.11.96

(71) Applicant(s)
ALLERGAN, INC.

(72) Inventor(s)
FRANK ZANGER; TIM SURBER; DON LEHMER

(74) Attorney or Agent
DAVIES COLLISON CAVE , GPO Box 3876, SYDNEY NSW 2001

(56) Prior Art Documents
US 4867268
EP 220178

(57) Claim

1. A pressure measurement system comprising:

a diaphragm;

means for exposing one side of said diaphragm to a fluid;

force transducer means for measuring force exerted by said fluid on said one side of said diaphragm with minimal movement of diaphragm position; and

means for removably coupling said force transducer means to an opposite side of said diaphragm, the means for removably coupling comprising a ferromagnetic plate attached to said diaphragm and magnet means, attached to said force transducer means, for removably engaging the ferromagnetic plate.

OPI DATE 30/12/93 APPLN. ID 43959/93
AOJP DATE 10/03/94 PCT NUMBER PCT/US93/05075

AU9343959

INTERNATIONAL APPLICATION PUBLISHED UNDER THE PATENT COOPERATION TREATY (PCT)

(51) International Patent Classification 5 :
G01L 19/00, A61B 5/03

A1

(11) International Publication Number: WO 93/24817

(43) International Publication Date: 9 December 1993 (09.12.93)

(21) International Application Number: PCT/US93/05075

(22) International Filing Date: 27 May 1993 (27.05.93)

(30) Priority data:
07/893,331 3 June 1992 (03.06.92) US

(71) Applicant: ALLERGAN, INC. [US/US]; 2525 Dupont Drive, Post Office Box 19534, Irvine, CA 92713-9534 (US)

(72) Inventors: ZANGER, Frank ; 3590 Thompson Place, Hayward, CA 94541 (US). SURBER, Tim ; 2015 Luna Avenue, San Leandro, CA 94578 (US). LEHMER, Don ; 687 Woodmont Avenue, Berkeley, CA 94708 (US).

(74) Agents: LAMBERT, Howard, R. et al.; Allergan, Inc., 2525 Dupont Drive, Post Office Box 19534, Irvine, CA 92713-9534 (US).

(81) Designated States: AU, CA, JP, European patent (AT, BE, CH, DE, DK, ES, FR, GB, GR, IE, IT, LU, MC, NL, PT, SE).

Published
With international search report.
Before the expiration of the time limit for amending the claims and to be republished in the event of the receipt of amendments.

673364

(54) Title: PRESSURE TRANSDUCER INTERFACE

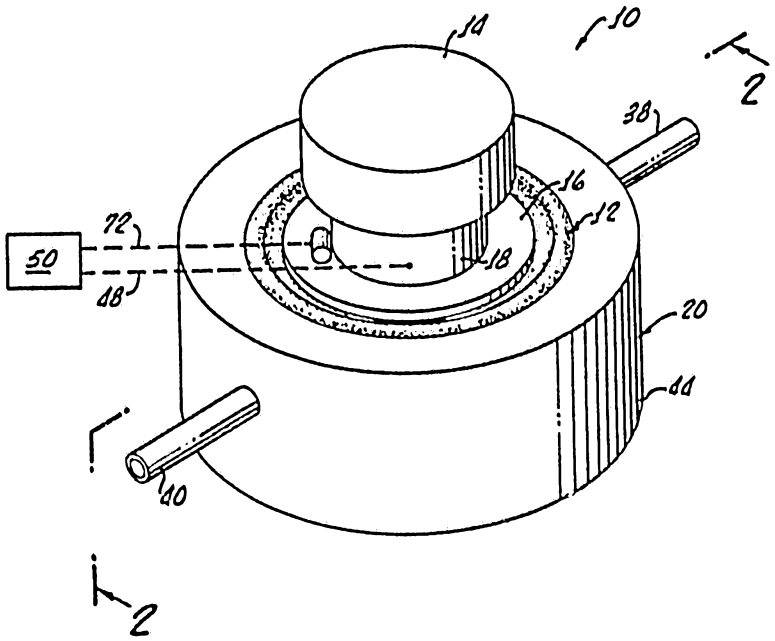

(57) Abstract

A pressure measurement system includes a diaphragm (12) and a chamber (30) for exposing one side of the diaphragm to a fluid. A force transducer (14) is provided for measuring force exerted by the fluid on the one side of the diaphragm independent of diaphragm position. A ferromagnetic plate (16) is attached to the diaphragm (12) to enable removable coupling of the diaphragm (12) to a magnet (18) permanently attached to the force transducer (14).

PRESSURE TRANSDUCER INTERFACE

FIELD OF THE INVENTION

The present invention generally relates to a pressure measurement system and more particularly is related to a pressure monitoring system for opthalmic instruments such as a Phaco instrument for removing the crystalline lens from an eye.

Typically, cataracts, or crystalline manifestations, in an eye are removed by fragmentation thereof which may include an ultra-sound driven hollow needle inserted into the eye through a small incision in the sclera. Removal of the fragmented lens is effected through a center hole in the needle and involves continuous circulation of fluid through the eye which is provided by the hollow needle inserted therein.

While eye pressure must be carefully maintained to prevent collapse of the eye chamber, over-pressure may be necessary at times to remove a blockage in the hollow needle which may be caused by a fragmented lens. In addition, fluid flow in the needle may be reversed to reflux the fluid and dislodge the fragmented lens from the hollow needle. During this operation, it is, of course, necessary to monitor and maintain eye pressure preselected absolute maximum level.

Failure to measure and control fluid pressure during the removal process may result in the formation of a large void in the plastic tubing system leading from the needle to a pump utilized in providing the fluid circulation. In addition, a sudden release of

blockage could result in the reduction of pressure in the eye as the void is filled by the liquid from the eye which may not be replaced with sufficient speed, thereby resulting in the collapse of the cornea as hereinabove pointed out.

Conversely, if there is poor control during the reflux process, a large over-pressure may be generated in the eye which would cause inflation of the eye when the blockage breaks free.

A number of peristaltic pumps have been developed for use with Phaco instruments such as described in co-pending U.S. Patent Application entitled Reduced Pulsation Tapered Ramp Pump Head, Serial No. 07/892,788, filed June 3, 1992 assigned to the assignee of the present application. This above-referenced patent application is incorporated herewith by specific reference thereto.

Heretofore, pressure measurement systems have utilized a diaphragm for the isolated measurement of pneumatic or hydraulic pressure have incorporated the diaphragm in a number of different structural configurations.

First, the diaphragm has been attached to known spring systems in order to determine the motion of the diaphragm in response to pneumatic and/or hydraulic pressure. This is a traditional method of measuring pressure and is commonly used in many mechanical gauges and pressure transducers. However, since unlimited diaphragm motion is not possible, saturation may occur. This condition effectively puts a maximum pressure measurement limitation on the system.

Further, this system requires accurate position measurements and diaphragm characteristics also affect the linear performance of the measurement system.

Other prior art systems have utilized a second, closed pneumatic or hydraulic system on an opposite side of the diaphragm and apparatus for measuring the pressure in the second system caused by motion of the diaphragm in response to a primary fluid.

In this system, the secondary fluid in the closed pneumatic system eliminates the position requirement on the diaphragm necessitated by the spring system, but is still subject to saturation. However, it also adds a requirement of an absolutely no-leak system, since any volume lost on the nonsterile side of the diaphragm, after the diaphragm is first attached, is lost.

This loss of volume makes saturation more likely, and if there is also the possibility of compressing the volume on the nonsterile side of the diaphragm as it is installed, creating a pressure offset.

A similar prior art system utilizes a second, closed pneumatic system on the nonsterile side of the diaphragm. However, in this system, pressure is generated in the second closed system to maintain a constant position of the diaphragm. Measurement of the pressure in this second system is a measurement of the pressure on the sterile side of the diaphragm.

It should be obvious that this last-mentioned system eliminates the need for a no-leak system and the possibility of saturation. However, it

reintroduces the position measurement requirement and, in addition, adds the requirement of a controllable pressure source. This secondary pressure source and controlled system also can induce the possibility of servo oscillation.

The apparatus in accordance with the present invention enables the measurement of pressure through the use of force measurement devices without the necessity of position measurement systems. In addition, precise measurement of the diaphragm position is not required.

It is also necessary that system must be sterile and either disposable or autoclavable and further must operate to transmit the pressure data while keeping the liquid system sterile.

SUMMARY OF THE INVENTION

A pressure measurement system in accordance with the present invention generally includes a diaphragm and means for exposing one side of the diaphragm to a fluid. A force transducer provides means for measuring force exerted by the fluid on the one side of the diaphragm independent of the diaphragm position. This force measurement eliminates a number of practical problems associated with the changing characteristics of the diaphragm as a function of its position. That is, the actual diaphragm displacement is not, in fact, measured; rather, the force exerted on the diaphragm is directly measured which relates to a true measure of the pneumatic or hydraulic pressure exerted on the other side of the diaphragm.

Naturally, since displacement is not measured, the need for a calibrated spring, for example, to relate force displacement is not required.

Importantly, means are also provided in accordance with the present invention for removably coupling the forced transducer means to an opposite side of the diaphragm. This feature enables the measurement portion of the system to be removed from the diaphragm which may thereafter be sterilized by autoclaving or, if it is a disposable system, replaced by a new, sterile diaphragm.

More particularly, a chamber for disposing the one side of the diaphragm to remove it may include a fluid inlet and a fluid outlet, and the diaphragm may be sealably disposed across an opening in the chamber. A ferromagnetic plate attached to the diaphragm and a magnet attached to the force transducer means provides a means for removably coupling the force transducer means to an opposite side of the diaphragm.

The magnet may be a permanent magnet or an electromagnetic device, and means may be provided for detecting positive magnetic coupling between the magnet and the plate. While unnecessary to the operation of the present invention, this device acts as a security system for ensuring that signals from the force transducer are, in fact, caused by pressure exerting in the diaphragm.

With specific reference to the chamber, it may include a cylindrical shape with the opening sealed by the diaphragm being disposed in the flat end of the chamber. In this configuration, the fluid inlet and

outlet means are disposed in curved portions of the chamber.

BRIEF DESCRIPTION OF THE DRAWINGS

The advantages and features of the present invention will be better understood by the following description when considered in conjunction with the accompanying drawings in which:

Figure 1 is a perspective view of the pressure measurement system in accordance with the present invention showing a chamber, diaphragm, force transducer and magnet system for coupling the force transducer to the diaphragm; and

Figure 2 is a cross-sectional view of the pressure measurement system shown in Figure 1 taken along the Section 2-2.

DETAILED DESCRIPTION OF THE DRAWINGS

Turning now to Figure 1, there is shown a pressure transducer measurement system 10 in accordance with the present invention generally showing a diaphragm 12, a force transducer 14, a ferromagnetic plate 16, a magnet 18, and a chamber 20.

The chamber 20, which may be formed from any suitable material, may have a diameter of about 1 1/4 inches and provides a means for exposing one side 26 of the diaphragm 12 to a fluid disposed in an inside 30 of the chamber 20.

As hereinafter described in greater detail, the ferromagnetic plate 16 and magnet 18 provide a means

for removably coupling the force transducer 14 to an opposite side 34 of the diaphragm 12.

In providing a means for exposing the one side 26 diaphragm to the fluid, the chamber 20 includes a fluid inlet 38 and a fluid outlet 40 disposed in opposing positions in a curved portion 44 of the chamber 20. The magnet 18 is permanently attached to the transducer 14 and may be of any suitable type, either electromagnetic or permanent magnet. If an electromagnet is used, suitable coupling by means of wire 48 to a control unit 50 may be utilized for interrupting the current flow to the electromagnet, thus decreasing, or eliminating, the magnetic coupling to the plate 16 for enabling separation of the magnet 18 and transducer 14 from the plate 16.

After removal of the magnet 18 and the transducer 14 from the plate 16, the chamber 20 and diaphragm may be autoclaved or otherwise sterilized without affecting the transducer 14 and permanent magnet 18. After sterilization, the transducer 14 and magnet 18 may be recoupled to the plate 16 as shown in Figures 1 and 2. Alternatively, in a disposable system, a replacement chamber (not shown) identical to the chamber 20 shown in the figures may be coupled to the transducer 14 via the permanent magnet 18 as described. Thereupon, selection of the permanent magnet and the coupling force between the magnet 18 and the plate 16, a ferromagnetic substance, may be determined by easy experimentation and, of course, will vary with the dimensions of the diaphragm, plate and transducer 14 requirements.

As shown, the diaphragm 12 is disposed across a circular opening 56 and sealed thereto along an inside surface 60 of the chamber 12. This attachment may be by adhesive or any other bonding system which provides a leak-tight engagement between the surface 60 and the diaphragm 12.

Similarly, the opposite side 34 of the diaphragm 12 is permanently attached to the plate 16 by means of adhesive or any suitable means for bonding of the plate 16 to the diaphragm 12 in a manner enabling autoclaving of the diaphragm 12 without separation. Such bonding techniques are well-known in the art.

While the diaphragm 12 may be formed from any suitable material, it is expected that it would be formed from a thin silicon material, for example, about 13 mils thick. In order to enable free movement of the diaphragm in response to the pressure of the fluid within the chamber 20, a circular pleated portion 64 may be formed in the diaphragm 12, with the pleated portion having a diameter greater than the plate 16 diameter.

Because the transducer 14 responds to force exerted by the diaphragm thereon, through the magnet 18, the exact position of the diaphragm 12 with respect to the opening 56 and remaining chamber interior 30 is not important in the operation of the device. This is a significant improvement over prior art devices.

While not necessary to the operation, the present system 10, a magnetic detector 70 may be installed in a position sensitive to the presence of the plate 16.

This detector 70 may be of any suitable type and may be operated by sensing the magnetic flux of the magnet 18. When the magnet is properly coupled to the plate 16, the magnetic flux exterior to the magnet 18 and plate 16 is significantly less than when the magnet 18 and the plate 16 are separated.

This provides a means for determining proper coupling. The detector 70 may be interconnected by wires to the control system 50 for this purpose. The control system 50 may be any appropriate state-of-the-art electronic circuit suitable for interconnection with the magnetic detector 70 and either indicating a noncoupled configuration and/or providing a signal for interrupting fluid flow into the chamber 20 when a coupling is not proper.

Thus, the system 10 in accordance with the present invention provides a method of measuring pressure through the use of a force transducer 14 which basically allows the diaphragm 12 to remain stationary. That is, there are no position measurement requirements necessary as in prior art systems. In addition, the nonsterile side of the diaphragm 12 is free from pneumatic or hydraulic contact with many prior art systems involving a secondary closed pneumatic or hydraulic system.

Further, the force transducer 14, which may be a strain gauge, such as, for example, Model MTX220A manufactured by Motorola, is not subject to mechanical overload and inherently remains stable for long periods of time.

With proper selection of a diaphragm and transducer, the system can measure pressures both greater or less than atmospheric pressure, and saturation will not occur if the force transducer 14 is sealed properly.

Because the diaphragm is uniformly supported and sealed across the opening 56, when no pressure is present in the chamber 20, the resilient nature of the silicon diaphragm 12 will automatically center within the opening which eliminates any long term drift or permanent offset of the diaphragm.

Although there has been hereinabove described a specific pressure measurement system in accordance with the present invention, for the purpose of illustrating the manner in which the invention may be used to advantage, it should be appreciated that the invention is not limited thereto. Accordingly, any and all modifications, variations, or equivalent arrangements which may occur to those skilled in the art, should be considered to be within the scope of the present invention as defined in the appended claims.

PCT/US 93/05075
IPEA/US 18 AUG 1994

WHAT IS CLAIMED IS:

1. A pressure measurement system comprising:

a diaphragm;

means for exposing one side of said diaphragm to a fluid;

force transducer means for measuring force exerted by said fluid on said one side of said diaphragm with minimal movement of diaphragm position; and

means for removably coupling said force transducer means to an opposite side of said diaphragm, the means for removably coupling comprising a ferromagnetic plate attached to said diaphragm and magnet means, attached to said force transducer means, for removably engaging the ferromagnetic plate.

2. The system according to claim 1 wherein said means for exposing one side of said diaphragm to a fluid comprises a chamber having a fluid inlet and a fluid outlet and said diaphragm is sealably disposed across an opening in said chamber.

3. The system according to claim 2 wherein said magnet means comprises an electromagnet.

4. The system according to claim 2 wherein said magnet comprises a permanent magnet.

5. The system according to claim 4 wherein said chamber has a cylindrical shape and said opening is disposed in a flat end of the chamber.

AMENDED SHEET

AUSTRALIAN PATENT OFFICE

6. The system according to claim 5 wherein said opening, diaphragm and plate are circular.

7. The system according to claim 6 wherein said fluid inlet and outlet are disposed in a curved portion of said chamber.

8. The system according to claim 7 further comprising means for detecting magnetic coupling between the magnet and the plate.

9. A fluid pressure measurement system comprising:

a chamber having a fluid inlet and a fluid outlet, said chamber further including means for defining an opening therein;

a diaphragm sealably disposed across said opening;

force transducer means for measuring force exerted on said diaphragm by the fluid in the chamber; and

means for removably coupling said force transducer means to said diaphragm, the means for removably coupling comprising a ferromagnetic plate attached to said diaphragm and magnet means, attached to said force transducer means, for removably engaging the ferromagnetic plate.

10. The system according to claim 9 wherein said magnet comprises an electromagnet.

11. The system according to claim 9 wherein said magnet comprises a permanent magnet.

AUSTRALIAN PATENT OFFICE

12. The system according to claim 11 wherein said chamber has a cylindrical shape and said opening is disposed in a flat end of the chamber.

13. The system according to claim 12 wherein said opening, diaphragm and plate are circular.

14. The system according to claim 13 wherein said fluid inlet and outlet are disposed in a curved portion of said chamber.

15. The system according to claim 14 further comprising means for detecting magnetic coupling between the magnet and the plate.

AUSTRALIAN PATENT OFFICE

FIG. 1.

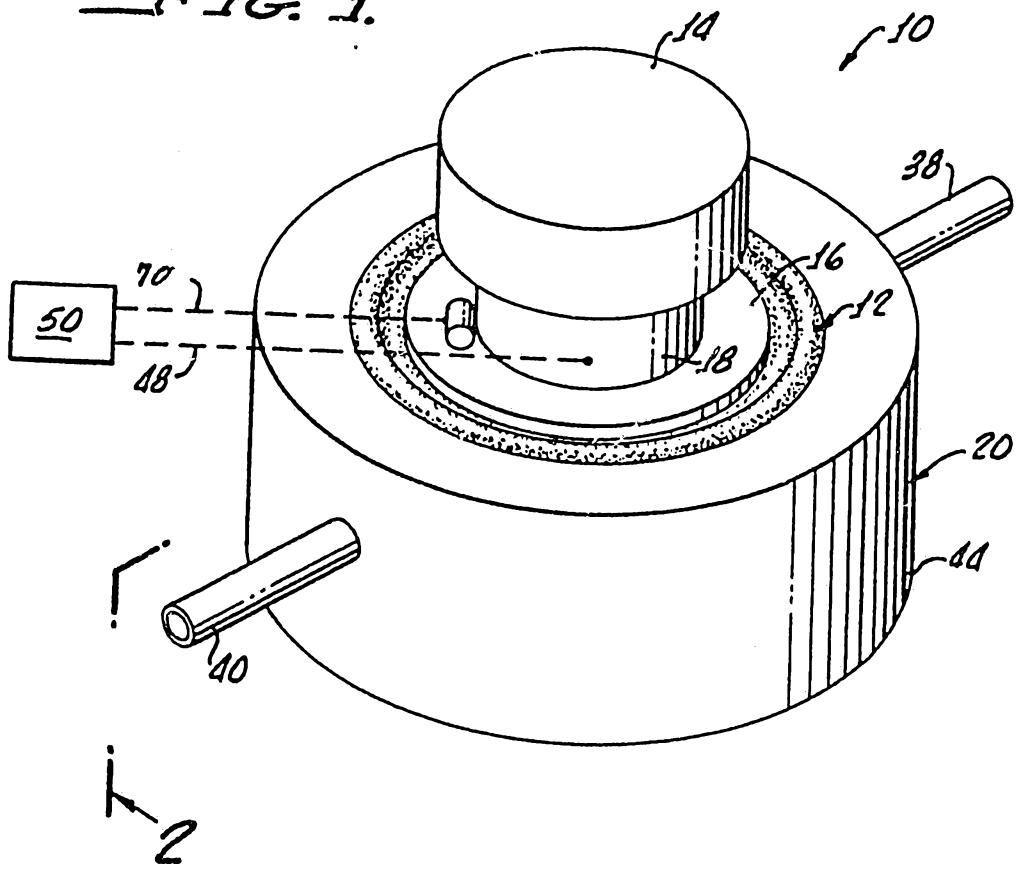
14
10
2
38
70
50
48
16
12
18
20
44
40
2

FIG. 2.

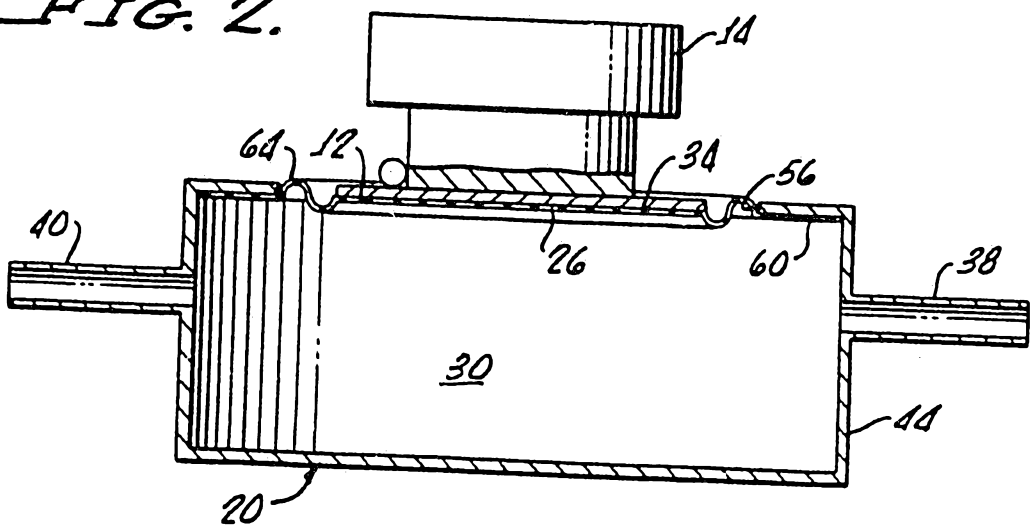
14
64
12
34
56
40
26
60
38
30
44
20

INTERNATIONAL SEARCH REPORT

International Application No
PCT/US 93/05075

A. CLASSIFICATION OF SUBJECT MATTER
IPC 5 G01L19/00 A61B5/03

According to International Patent Classification (IPC) or to both national classification and IPC

B. FIELDS SEARCHED

Minimum documentation searched (classification system followed by classification symbols)
IPC 5 G01L A61B

Documentation searched other than minimum documentation to the extent that such documents are included in the fields searched

Electronic data base consulted during the international search (name of data base and, where practical, search terms used)

C. DOCUMENTS CONSIDERED TO BE RELEVANT

Category *	Citation of document, with indication, where appropriate, of the relevant passages	Relevant to claim No.
X	DE,C,888 933 (C. ULRICH) 7 September 1953	1,2,6-8
X	see page 2, line 6 - page 3, line 1	10,14-16
X	EP,A,0 208 955 (PETER VON BERG) 21 January 1987	1,2,6-8
X	see page 2, line 30 - page 3, line 16 see page 12, line 27 - page 13, line 24	10,14-16
A	US,A,4 867 268 (I. A. ULERT) 19 September 1989	1,3,5,7
A	see column 2, line 58 - column 3, line 61	11,13,15
A	EP,A,0 228 178 (TDK CORP.) 8 July 1987	1,3,5-7
A	see column 2, line 19 - line 52	10,11
A	see column 4, line 43 - column 5, line 4	13-15
A	US,A,4 014 319 (R. FAVRE) 29 March 1977	1,5,7,10
A	see column 1, line 51 - column 3, line 33	13,15

☐ Further documents are listed in the continuation of box C.

☒ Patent family members are listed in annex.

* Special categories of cited documents :

"A" document defining the general state of the art which is not considered to be of particular relevance

"E" earlier document but published on or after the international filing date

"L" document which may throw doubts on priority claim(s) or which is cited to establish the publication date of another citation or other special reason (as specified)

"O" document referring to an oral disclosure, use, exhibition or other means

"P" document published prior to the international filing date but later than the priority date claimed

"T" later document published after the international filing date or priority date and not in conflict with the application but cited to understand the principle or theory underlying the invention

"X" document of particular relevance; the claimed invention cannot be considered novel or cannot be considered to involve an inventive step when the document is taken alone

"Y" document of particular relevance; the claimed invention cannot be considered to involve an inventive step when the document is combined with one or more other such documents, such combination being obvious to a person skilled in the art.

"&" document member of the same patent family

Date of the actual completion of the international search	Date of mailing of the international search report
7 October 1993	08. 11. 93
Name and mailing address of the ISA European Patent Office, P.B. 5818 Patentlaan 2 NL - 2280 HV Rijswijk Tel. (+31-70) 340-2040, Tx. 31 651 epo nl, Fax (+31-70) 340-3016	**Authorized officer** RIEB, K

Form PCT/ISA/210 (second sheet) (July 1992)

INTERNATIONAL SEARCH REPORT

Information on patent family members

International Application No
PCT/US 93/05075

Patent document cited in search report	Publication date	Patent family member(s)	Publication date
DE-C-888933		NONE	
EP-A-0208955	21-01-87	DE-A- 3525536	29-01-87
		JP-A- 62019151	27-01-87
US-A-4867268	19-09-89	NONE	
EP-A-0228178	08-07-87	JP-C- 1620744	09-10-91
		JP-B- 2044533	04-10-90
		JP-A- 62155833	10-07-87
		US-A- 4765321	23-08-88
US-A-4014319	29-03-77	CH-A- 579899	30-09-76
		DE-A,C 2509165	18-09-75
		FR-A,B 2262953	03-10-75
		GB-A- 1469364	06-04-77
		JP-A- 50152580	08-12-75