(No Model.)

G. T. WILLIAMS.

COMBINED SAND BAND AND THILL COUPLING.

No. 456,389. Patented July 21, 1891.

Fig. 1.

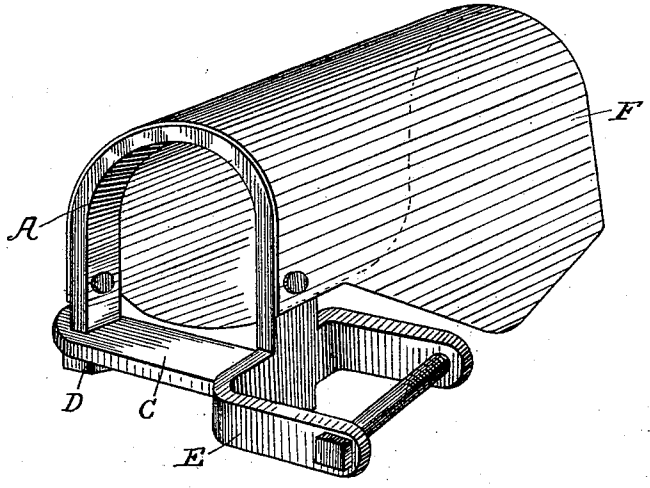

Fig. 2.

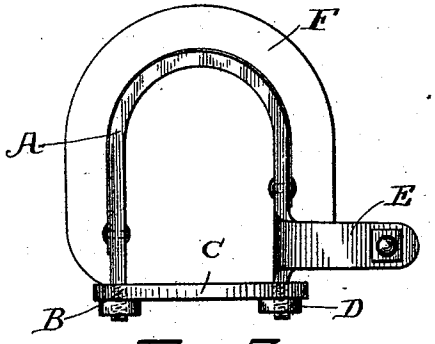

Fig. 3.

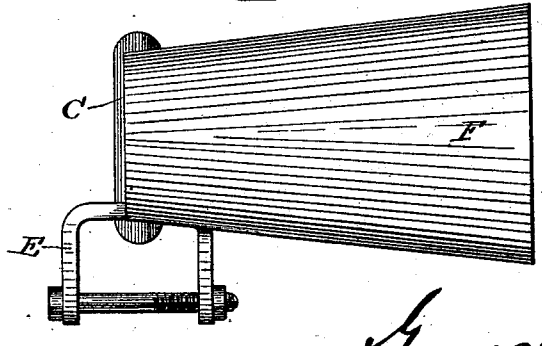

Witnesses
Albert Popkine.
Thomas G. Miller.

Inventor
George T. Williams
By his Attorney
David A. Gourick

THE NORRIS PETERS CO., PHOTO-LITHO., WASHINGTON, D. C.

UNITED STATES PATENT OFFICE.

GEORGE T. WILLIAMS, OF ROCKFORD, OHIO.

COMBINED SAND-BAND AND THILL-COUPLING.

SPECIFICATION forming part of Letters Patent No. 456,389, dated July 21, 1891.

Application filed October 27, 1890. Serial No. 369,492. (No model.)

To all whom it may concern:

Be it known that I, GEORGE T. WILLIAMS, a citizen of the United States, residing at Rockford, in the county of Mercer and State of Ohio, have invented a new and useful Shackle and Shield for Vehicles, of which the following is a specification.

The object of this invention is to provide a combined thill-coupling and sand-band for vehicles.

The above-mentioned objects are attained by the means illustrated in the accompanying drawings, in which—

Figure 1 represents a perspective view of my invention, showing the sand-shield attached to one of the clips of the forward axle of a vehicle. Fig. 2 represents a front view thereof, and Fig. 3 represents a top view of the same.

Referring to the drawings, the letter A indicates one of the clips of a vehicle-axle, which is of the ordinary inverted-U shape and provided with the usual screw-threaded projections B at its extremities for the reception of the cross-bar C and the nuts D, by means of which it is fastened to the axle. From the arms of said clip extend forwardly the arms E of a clip, to which the thills of the shafts are coupled.

The letter F indicates the sand or dust guard, which is a truncated section of an approximately conical sheet of metal, and which is secured at its narrower end to the clip A in any convenient manner. In practice I prefer to construct the clips and shield integral, so that they can be applied directly to the axle of the vehicle. This may be accomplished by forming the whole device of cast metal; or the clips and shield may be struck up or formed of malleable iron, thus lessening the expense of manufacture and forming a more compact and durable article.

The shield, when in place, extends over the joint between the hub and the shoulder on the axle and effectually prevents the entrance of sand, dust, or grit between the bearing-surfaces of the hub and the axle.

It is evident that various sizes of guards may be employed for different characters of vehicles. In practice I propose to employ three sizes—constructing the shield for buggies to extend three inches over the hub, for carts to extend four inches over the hub, and for spring-wagons and hacks to extend five inches over the hub. It is evident, however, that other dimensions may be used without departing from the spirit of my invention.

Having thus described my invention, what I claim, and desire to secure by Letters Patent, is—

The combination, with an axle-clip, of a thill-coupling arranged integral with one of its members, and a sand-band attached to the bow of the clip and arranged at right angles to the thill-coupling, substantially as shown and described.

GEORGE T. WILLIAMS.

Witnesses:
J. P. SYMONS,
C. S. MAUK.