No. 610,972. Patented Sept. 20, 1898.

N. M. POWELL.

SEAT RECORDING DEVICE FOR PASSENGER CARS.

(Application filed Sept. 24, 1897.)

2 Sheets—Sheet 1.

(No Model.)

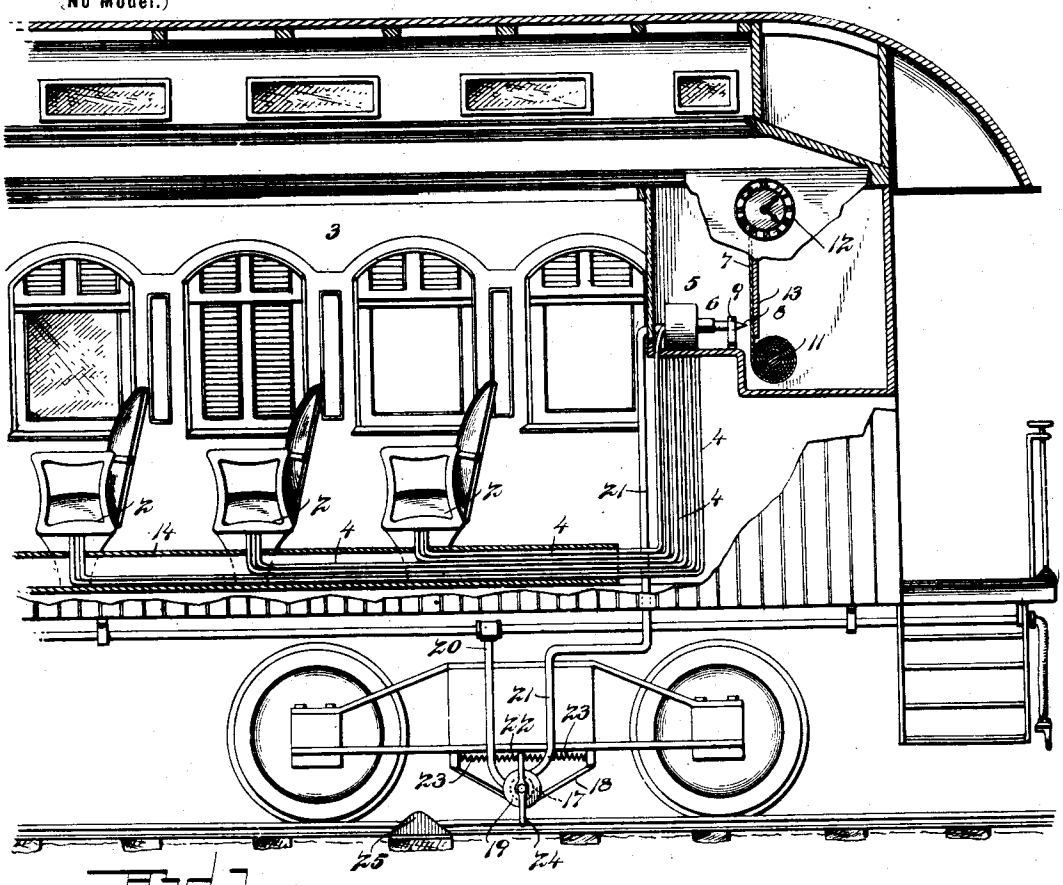

Fig. 1.

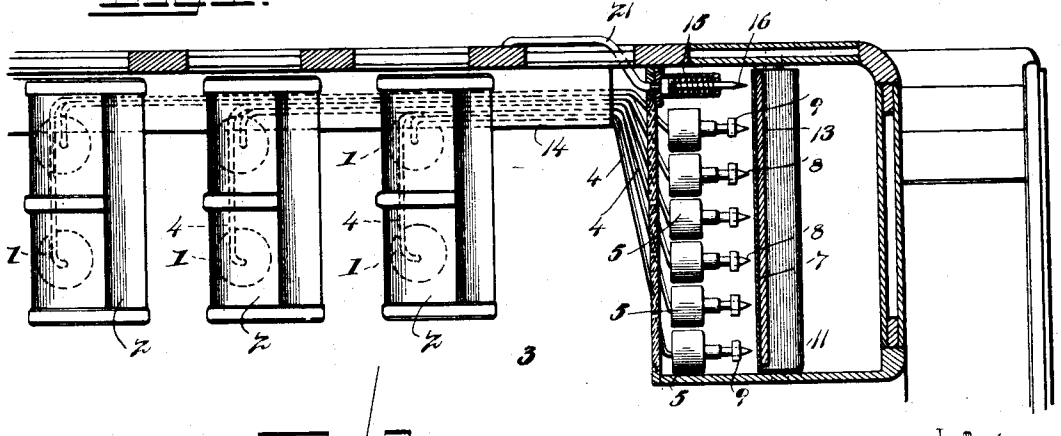

Fig. 3.

Inventor
Noah M. Powell

Witnesses
E. K. Stewart
H. F. Riley

By Wood Attorneys,
C. A. Snow & Co.

THE NORRIS PETERS CO., PHOTO-LITHO., WASHINGTON, D. C.

No. 610,972. Patented Sept. 20, 1898.

N. M. POWELL.

SEAT RECORDING DEVICE FOR PASSENGER CARS.

(Application filed Sept. 24, 1897.)

(No Model.) 2 Sheets—Sheet 2.

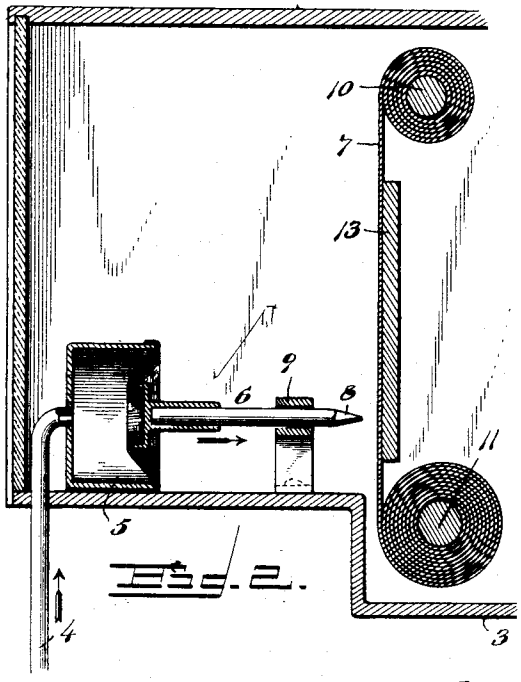

Fig. 2.

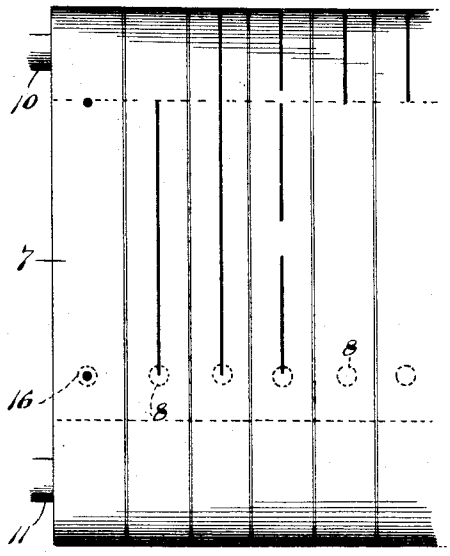

Fig. 4.

Fig. 5.

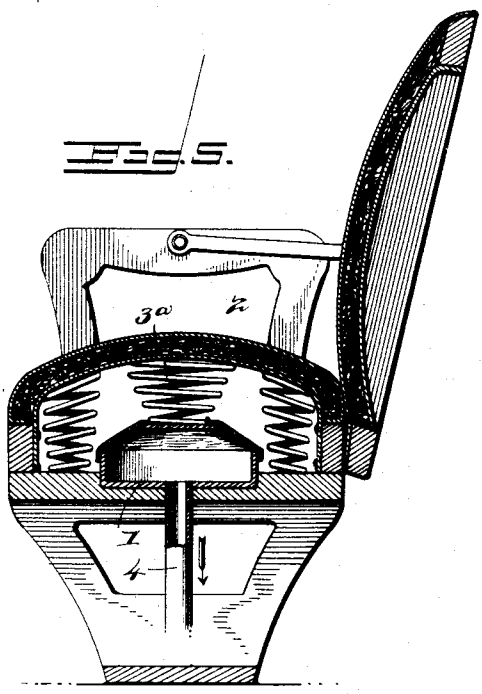

Fig. 6.

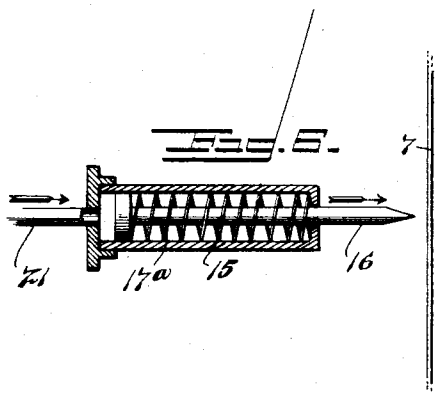

Inventor
Noah M. Powell

Witnesses
E. K. Stewart.
H. J. Riley

By his Attorneys,
C. A. Snow & Co.

THE NORRIS PETERS CO., PHOTO-LITHO., WASHINGTON, D. C.

UNITED STATES PATENT OFFICE.

NOAH MONROE POWELL, OF EDINA, MISSOURI, ASSIGNOR OF TWO-THIRDS TO FRED B. PARSONS AND ORVILLE D. JONES, OF SAME PLACE.

SEAT-RECORDING DEVICE FOR PASSENGER-CARS.

SPECIFICATION forming part of Letters Patent No. 610,972, dated September 20, 1898.

Application filed September 24, 1897. Serial No. 652,918. (No model.)

To all whom it may concern:

Be it known that I, NOAH MONROE POWELL, a citizen of the United States, residing at Edina, in the county of Knox and State of Missouri, have invented a new and useful Seat-Recording Device for Passenger-Cars, of which the following is a specification.

The invention relates to improvements in seat-recording devices for passenger-cars.

The object of the present invention is to provide for passenger-cars and analogous conveyances a simple and comparatively inexpensive device for automatically recording the occupancy of each seat and for indicating the various stations, so that the record may be compared with the returns of the conductor in order to ascertain whether he is rendering true and accurate returns to the auditor of the railway.

The invention consists in the construction and novel combination and arrangement of parts, as hereinafter fully described, illustrated in the accompanying drawings, and pointed out in the claims hereto appended.

In the drawings, Figure 1 is a side elevation of a portion of a railway-coach provided with a seat-recording device constructed in accordance with this invention, the car-body being partly broken away to illustrate the connection between the station-indicating device and the mechanism for operating the same. Fig. 2 is a longitudinal sectional view of a portion of the car. Fig. 3 is a horizontal sectional view. Fig. 4 is a detail view of the record-sheet. Fig. 5 is a sectional view of a car-seat, illustrating the manner of mounting the seat-bulb. Fig. 6 is a detail sectional view of the station-indicator.

Like numerals of reference designate corresponding parts in all the figures of the drawings.

1 designates a compressible air-bulb designed to be arranged beneath each seat 2 of a passenger car or coach 3 and connected with the seat 2 by a spiral spring 3^a, whereby when the seat is occupied sufficient pressure will be exerted to compress the air-bulb; but instead of employing a compressible air-bulb a cylinder or similar device adapted to force air through an air-pipe 4 may be employed. The air-pipe 4 extends from the seat-bulb 1 to a bulb 5, which is normally deflated to a greater or less extent and which is adapted to be expanded by the air forced through the pipe 4 to actuate a marking device 6 for carrying the same into contact with a movable record-sheet 7. The marking device may, as illustrated in the accompanying drawings, consist of a reciprocating pencil 8, mounted in a suitable guide 9 and fitting in a socket of the bulb 5; but any form of stylus or a tracing-wheel may be employed. Instead of employing the bulb 5 a cylinder may of course be used similar to that heretofore mentioned in connection with the seat.

The guide 9, which may be of any suitable construction, is preferably in the form of a bracket provided with an eye receiving the pointed end of the pencil.

The record-sheet 7, which may be located in any convenient position, preferably at an end of the car, is carried by rolls 10 and 11, disposed one above the other, for causing the record-sheet to move vertically; but it can be arranged horizontally, if desired. A clock mechanism 12 is employed for actuating the record-sheet, and the shaft or arbor which carries the minute-hand is coupled with the upper roll 10, which makes one rotation every hour and gradually advances the record-sheet. Between the upper and lower rolls the record-sheet is supported by a board 13, which forms a part of the supporting-frame of the upper and lower rollers, and it will be apparent that when a seat is occupied the marking device will be carried into contact with the record-sheet, and the movement thereof will produce a continuous line or mark on it during the occupancy of the seat.

The recording device of each seat is similar to that just described, and the air-tubes 4 between the bulbs 1 and 5 are preferably arranged within a protecting pipe or conduit 14. All of the marking devices may, if convenient or desirable, be arranged to record on a single recording-sheet; but separate recording-sheets may be employed and arranged at the ends of the car, so as to receive the marking devices of the adjacent seats.

In order to indicate the various stations automatically, a cylinder 15 is employed and is arranged adjacent to the recording-sheet,

with its piston-rod 16 in position to engage the record-sheet and perforate the same. After the piston-rod is actuated by the means hereinafter described to puncture the record-sheet, and thereby indicate a station, it is returned to its initial position by a coiled spring 17^a, located within the cylinder 15 and interposed between the front cylinder-head and the piston-head.

The mechanism for operating the station-indicating device is the same as that shown and described in my application for patent for improvements in photographic registers for railway-coaches filed July 12, 1897, Serial No. 644,328, and embodies an automatic valve 17, arranged beneath the body of the coach or car and preferably carried on the car-truck in any suitable way. It is supported by a hanger or bracket 18, and a valve-casing 19 is connected with one end of the air-pipe 20, which is led along the car to connect with the brake-cylinder or with any other suitable part of the air-brake mechanism. The valve proper is of the type known as "turning-plug" valves, and it is seated in its casing tightly to prevent leakage of air through the valve 17, the latter being normally in free communication with the air-brake by means of the pipe 20. From the valve-casing 19, at a point opposite the connection of the pipe 20 with the said valve-casing, leads a pipe 21, which is connected with the cylinder. The valve 17 is equipped with means which tend to hold it normally in a closed condition to prevent air from the brake mechanism from passing to the station-indicating device, and this means consists of a rocking arm 22, suitably attached to the valve and operatively connected with holding-springs 23, supported in the hanger 18. As shown, two springs are employed to bear against opposite sides of the arm 22, said springs exerting equal pressure on the said arm to hold the same in equilibrium, but capable of yielding or giving to the motion of the valve-arm when the valve is operated by its tappet devices.

The tappet mechanism consists of an arm 24 and a series of tappets or detents placed at suitable intervals along the railway-track between the stations of the railway. One of these tappets is shown at 25 in Fig. 1 of the accompanying drawings as consisting of a block with inclined faces for the tappet-arm 24 to ride against as the train passes over the track. The tappet-arm 24 is attached or connected with the valve 17 to operate the latter when the tappet-arm is raised by engaging with the fixed tappet 25. When the valve is operated by the tappet-arm, communication is established between the air-pipe 21 and the air-pipe of the brake mechanism, and air is admitted to the cylinder, and the station-indicating device is thereby operated.

The invention has the following advantages: The apparatus is simple and comparatively inexpensive in construction and is adapted to be readily applied to a passenger car or coach and is capable of automatically indicating the occupancy of the seats. The stations are automatically indicated by it, and the record-sheet will afford accurate information for enabling the auditor of a railway to ascertain whether the conductors are rendering true and accurate returns.

Changes in the form, proportion, and minor details of construction may be resorted to without departing from the spirit or sacrificing any of the advantages of this invention.

What I claim is—

1. In a seat-recording device for railway-cars, the combination of a marking device for engaging a movable record-sheet, a station-indicating device comprising a cylinder having a piston-rod arranged to engage the record-sheet and mark the same, and means for automatically operating the station-indicating device at intervals, substantially as described.

2. In a seat-recording device for railway-cars, the combination of upper and lower rolls adapted to carry a record-sheet, a series of marking devices arranged to engage the record-sheet, means for automatically operating the marking devices when the seats of a car are occupied, a station-indicating device arranged adjacent to the said marking devices and adapted to engage the record-sheet, and operating mechanism for automatically operating the station-indicator at intervals, substantially as described.

In testimony that I claim the foregoing as my own I have hereto affixed my signature in the presence of two witnesses.

NOAH MONROE POWELL.

Witnesses:
H. D. RHOADER,
J. W. ELLIS.