Dec. 27, 1966 W. W. MARTINMAAS 3,293,800

STOCK-PROOF GATEWAY

Filed Dec. 20, 1963 2 Sheets-Sheet 1

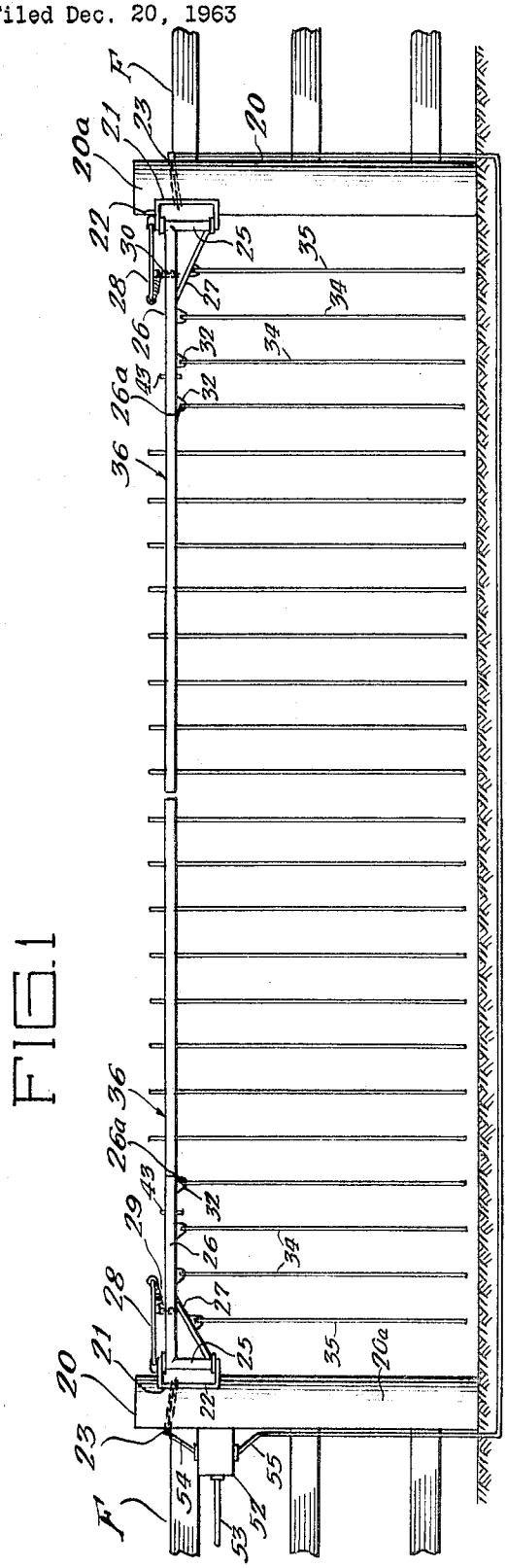

FIG. 1

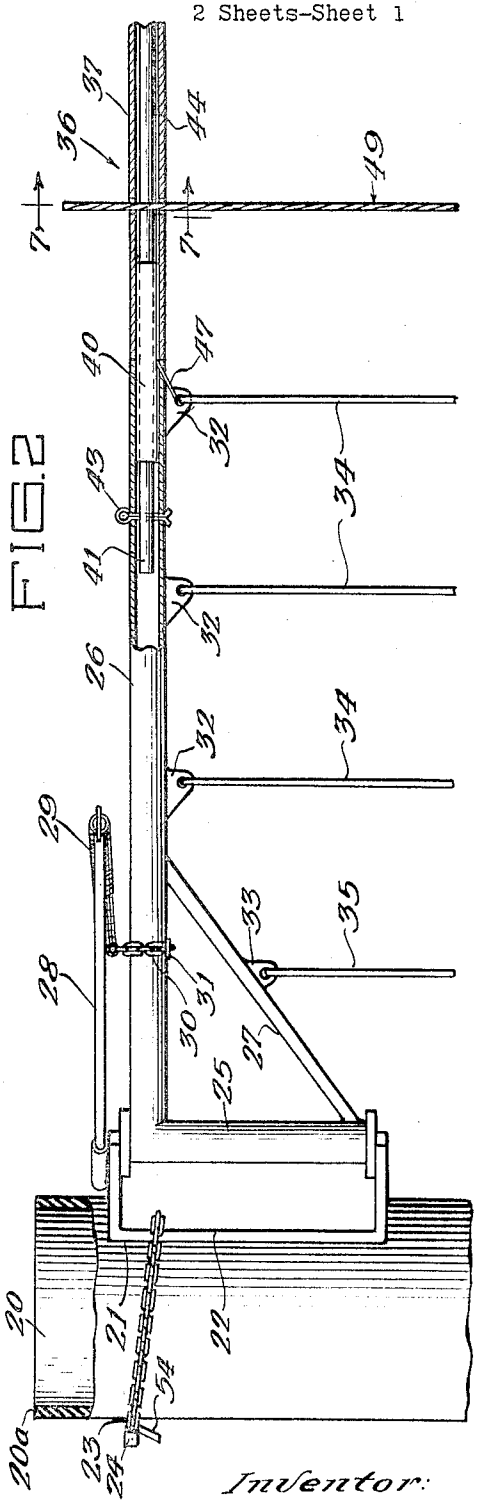

FIG. 2

Inventor:
Werner W. Martinmaas
By: Hofgren, Wegner, Allen, Stellman & McCord
Attorneys

Dec. 27, 1966 W. W. MARTINMAAS 3,293,800

STOCK-PROOF GATEWAY

Filed Dec. 20, 1963 2 Sheets-Sheet 2

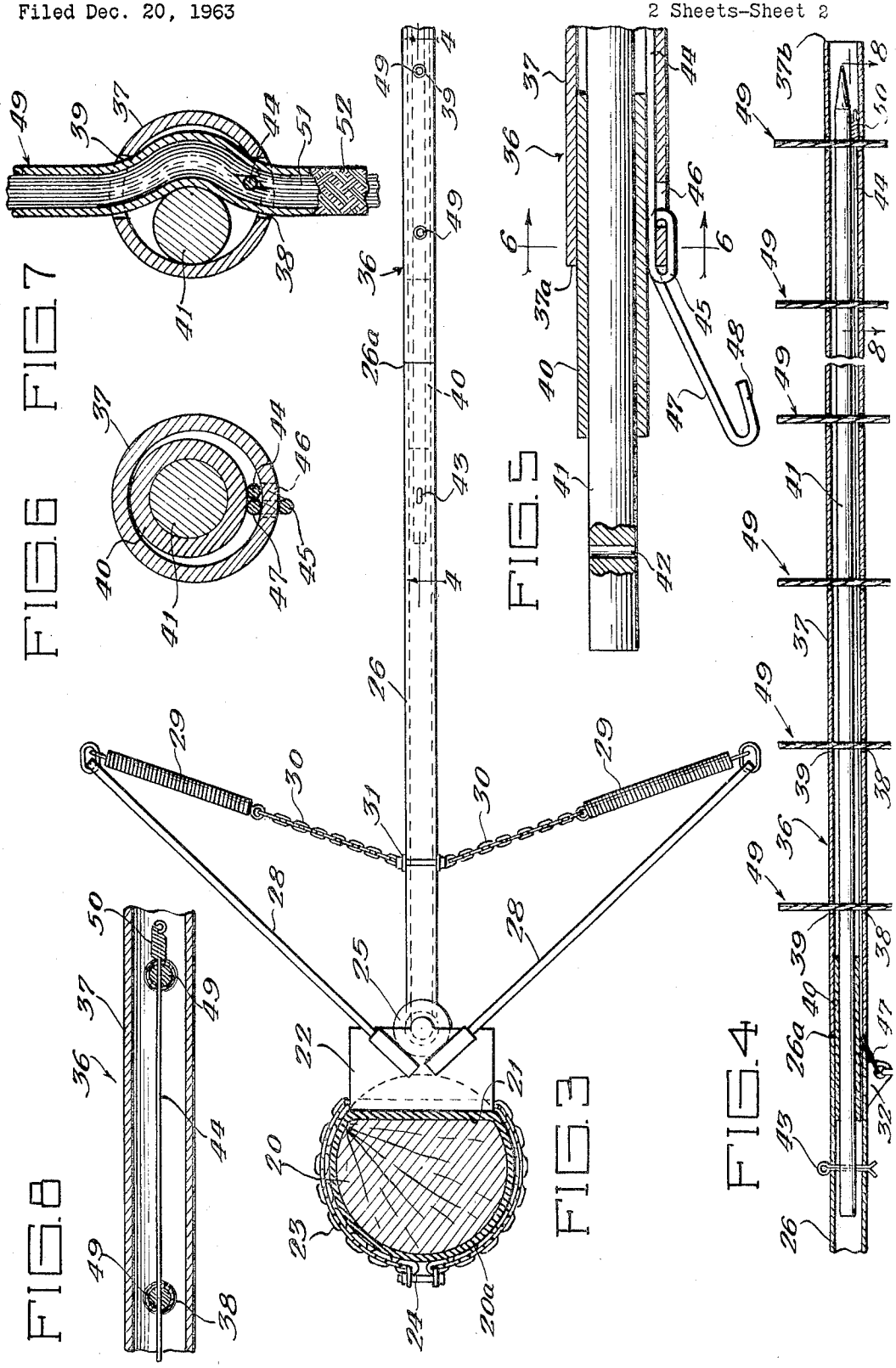

United States Patent Office 3,293,800 Patented Dec. 27, 1966

3,293,800

STOCK-PROOF GATEWAY

Werner W. Martinmaas, Watertown, S. Dak., assignor to Arthur E. Thompson and Eugene B. Koehn, Watertown, S. Dak.

Filed Dec. 20, 1963, Ser. No. 331,993
12 Claims. (Cl. 49—59)

This invention relates to a stock-proof gateway, and in particular it relates to a gateway which permits the free passage of motor vehicles of all kinds, while preventing livestock from passing through.

There have been efforts to build stock-proof gates which will permit free passage of vehicles without the need for an occupant of the vehicle to get out and open the gate and then get back in after the vehicle passes through the gateway.

Some gates have been designed to be pushed open by a vehicle; and there are some which have utilized charged wires to repel livestock. However, no device of the above-defined type has been satisfactory either because it might damage the finish of a motor vehicle or because it was not adequately stock-proof.

In accordance with the present invention, a bar extends effectively continuously between a pair of posts that define the sides of a gateway. Freely suspended from the bar is a plurality of spaced, pliable, electrically conductive stock-repelling cables. Each cable includes electrically conductive means, and a relatively soft, smooth-surfaced body covering the conductive means, the body being electrically permeable to permit transmission of electricity from the conductive means to an object touching the cable. The soft, smooth body permits the cable to drag over a painted vehicle body without damaging the paint, so that an automobile or other vehicle may drive through the gateway without hindrance or damage, either to the vehicle, or to a person in the vehicle. The electrically conductive means in the cable is charged with a pulsating electric current from a conventional fence charging device. Thus, livestock are repelled by the pulsating electrical charge in the cables.

Preferably, the pliable, smooth-surfaced cables are used only in a central area of the gateway which affords a vehicle passage, while between the vehicle passage and the gateposts there are rigid, stock-repelling rods freely suspended from the gate bar means. The rods may be made heavy enough so that they do not tend to be blown from a vertical position in a high wind, and thus momentarily leave space between a rod and a post through which livestock might pass.

The preferred embodiment of the invention has a pair of opposed pivoted pipes that extend outwardly to points near the edges of the roadway; and smooth surfaced gate bar elements which are telescoped in the ends of the pipes carry the stock repelling cables. The gate bar elements may slide freely out of the pipes and are retained by expendable shear pins so that if a cable is caught on a vehicle it will pull the gate bar element free of the pipe and not break anything but the shear pin. Likewise, the electrical conductor from the electric fence charger to the gate bar element may be separated by endwise pull on said element.

In the invention the gate arrangement itself is conventional, with separate gate bars hung on two posts, and centering springs normally retaining the gate bars in alignment with one another and in the plane of the posts.

The invention is illustrated in a preferred embodiment in the accompanying drawings, in which:

FIG. 1 is a front elevational view, partially in section, illustrating a preferred embodiment of the invention;

FIG. 2 is a fragmentary elevational view, partially in section, on an enlarged scale, to illustrate the structure of a gate bar;

FIG. 3 is a fragmentary plan view on the same scale as FIG. 2;

FIG. 4 is a fragmentary, vertical central sectional view of one gate bar, taken generally as illustrated along the line 4—4 of FIG. 3, but extending to the free end of the gate bar;

FIG. 5 is a fragmentary section on an enlarged scale showing details of the inner end of a separate prefabricated portion of the gate bar;

FIG. 6 is a sectional view on an enlarged scale taken substantially as illustrated along the line 6—6 of FIG. 5;

FIG. 7 is a fragmentary sectional view on an enlarged scale taken substantially as illustrated along the line 7—7 of FIG. 2; and

FIG. 8 is a fragmentary section on an enlarged scale taken substantially as illustrated along the line 8—8 of FIG. 4.

Referring to the drawings in greater detail, a fence F is provided with a pair of conventional wooden gateposts **20** which are notched at **21** to receive hinge brackets **22** that are secured to the post by chains **23** and clamp bolt assemblies **24**, in a known manner. As best seen in FIGS. 2 and 3, the hinge bracket **22** provides a pivotal mounting for a pintle **25** at the upper end of which is an integral metal pipe **26** that extends at right angles to the pintle, and a brace **27** extends diagonally from the bottom of the pintle to a point intermediate the ends of the pipe **26**. A pair of spring carrying arms **28** are mounted on the top of hinge bracket **22** and extend outwardly from the post at angles of approximately 45 degrees on opposite sides of a plane projected through the pintles **25** on the two posts **20**. Centering springs **29** for the gate pipe section **26** are pivotally connected at one end to the arm **28**, and chains **30** connected the springs to a U-clamp **31** by means of which the two springs are adjustably connected to the pipe **26**. Thus, the springs act to normally hold the gate bar, that includes the pipe section **26**, in the plane of the two pintles **25**. As best seen in FIG. 2, the pipe sections **26** have eyes **32** spaced along their lower surfaces, the diagonal braces **27** have eyes **33** in their lower surfaces, and rigid, stock-repelling rods **34** are freely suspended from the eyes **32**, while a similar but shorter rod **35** is freely suspended from the eye **33**. The rods are heavy enough that they hang in a vertical position even in a reasonably high wind, so that the rods **35** may not be blown away from the posts **20** a sufficient distance to permit livestock to pass between the post and the displaced rod.

A pair of separate gate bar elements, indicated generally at **36**, slide into the open outer ends **26***a* of the pipes **26**, and the space between said open outer ends, which is barricaded by the gate bar elements **36**, affords a vehicle passage in the central area of the gateway.

Referring now more particularly to FIGS. 4 to 8, inclusive, the element **36** consists of a length of polyethylene tubing **37** that has aligned holes **38** and **39** spaced at intervals along its length. A plastic bushing **40** that projects from the inner end **37***a* of the polyethylene tube **37** centers a fiberglass rod **41** that projects outwardly of the bushing **40** and has a bore **42** to receive an expendable shear pin **43** by means of which the bar element **36** is releasably retained in position with the inner end **37***a* of the polyethylene tube abutting the outer end **26***a* of the pipe **26**. As seen in FIG. 4, the fiberglass rod **41** extends substantially to the outer, or free end **37***b* of the polyethylene tube.

An electric conductor wire **44** extends the length of the polyethylene tube **37** alongside the fiberglass rod **41**, and a loop **45** formed in the conductor **44** passes around an end portion of the tube **37**, through a hole **46** in the tube,

and terminates in an outwardly extending shank 47 having a hook 48 that is adapted to be engaged in the outermost eye 32 on the pipe 26.

The conductor wire 44 is soft enough that any pull on the gate bar element 36 which breaks the shear pin 43 can straighten the hook 48 and permit the element 36 to pull out of the pipe 26. When the gate bar element is reinserted in the pipe the wire 44 can again be engaged with the eye 32 and bent into a hook.

A plurality of pliable stock repelling electrical conductor cables, each indicated generally at 49, are best seen in FIG. 7 to extend through the aligned holes 38 and 39 in the polyethylene tube 37, and each of the cables 49 is impaled by the electrical conductor wire 44 and clamped into the polyethylene tube 37 by the fiberglass rod 41. As seen in FIG. 4, the conductor wire 44 has a pigtail 50 at its outer end that prevents it from being disconnected from the stock-repelling cable 49.

Each of the cables 49 includes electrically conductive means 51, and a relatively soft smooth surfaced body 52 covering the conductive means. The body 52 is electrically permeable to permit transmission of electricity from the conductive means 51 to an object touching the surface of the body. Conveniently the electrically conductive means 51 takes the form of a wire core, and the body 52 is braided polyethylene that is sufficiently porous for electricity to pass through it from the core. Alternatively fine wire strands may be braided with the polyethylene, provided the entire outer surface of the body is soft and smooth so as to avoid scratching or marring the finish of an automobile. It is likewise possible for the cable to have a body of polyethylene or like soft, smooth material that contains enough finely divided electrically conductive material, such as metal powder or graphite, to make the entire cable conductive without giving it a surface that could scratch or mar the finish of an automobile.

Referring again to FIGS. 1 and 2, a standard commercially available electric fence charging unit 52 is mounted on one of the gate posts 20 in the usual way and has an electrical supply wire 53. A near side electrical connector wire 54 extends from the fence charging unit 52 and is electrically connected with the chain 23 so that the intermittent electric current emitted by the charging unit 52 passes through the chain 23 and the bracket 22 into the pintle 25, the pipe 26, the rods 34 and 35, the electrical conductor wire 44 and the electrically conductive cores 51 of the stock repelling cables 49. A far side electrical connector wire 55 extends from the charging device 52 downwardly along the post 20, underground beneath the gateway to the opposite post 20, and upwardly to the fastening chain 23 on the opposite post so as to charge the other half of the gate. To prevent current leakage through the posts 20, especially when they are wet, the upper ends of the posts have insulating jackets 20*a*, insulating the chains 23 and brackets 22 from the posts.

It is apparent from the foregoing description of the structure that if an animal contacts the rods 34 or 35, or the stock repelling cables 49, he will receive a brief violent electric shock as in any electric fence structure, and thus will be repelled from passing through the gateway. On the other hand, a person driving a motor vehicle may pass directly through the vehicle passage in the central area of the gateway, and the polyethylene tubing and smooth jacketed stock repelling cables 49 will slide over the surface of the motor vehicle without scratching or damaging it in any way. Likewise, a pedestrian may grasp the polyethylene tube 37 and swing the gate open without being shocked, provided he stays clear of the cables 49, rods 34 or 35, and pipe 26.

The foregoing detailed description is given for clearness of understanding only and no unnecessary limitations should be understood therefrom, as modifications will be obvious to those skilled in the art.

I claim:

1. In a stock-proof gateway, in combination: upright posts defining the sides of the gateway; bar means mounted on the posts a predetermined distance above the bottoms of the posts and extending effectively continuously across the gateway, said bar means comprising a tube having a plurality of holes; means supporting an end of the tube on a post; an electric conductor wire in the tube; a plurality of spaced, pliable, stock-repelling electric conductor cables which have their upper ends extending through the holes into the tube and impaled by the conductor wire so that the conductor cables are freely suspended from said bar means, each such cable having electrically conductive means, and a relatively soft, smooth-surfaced body covering the conductive means, said body being electrically permeable to permit transmission of electricity from the conductive means to an object touching the cable, and being adapted to drag over a painted vehicle body without damaging the paint; and means for delivering a pulsating electrical charge to the cables, whereby a person in a vehicle may drive through the gateway without hindrance or damage to the person or vehicle, while livestock are repelled by the pulsating electrical charge in the cables.

2. The device of claim 1 in which the tube has pairs of aligned holes, the upper end of each cable extends through a pair of aligned holes, and a longitudinal keeper rod is placed in the tube alongside the conductor wire and clamps the upper ends of the cables against the inside of the tube.

3. In a stock-proof gateway in combination: upright posts defining the sides of the gateway; bar means mounted on the posts a predetermined distance above the bottom of the posts and extending effectively continuously across the gateway, said bar means comprising a pipe mounted on a post, and a smooth surfaced tube which has an end portion slidably received in the pipe; an electrical conductor wire in the tube which is electrically connected with the pipe and detachable therefrom by endwise movement of the tube with respect to the pipe; a plurality of spaced, pliable, stock-repelling electric conductor cables freely suspended from said bar means, each such cable having electrically conductive means, and a relatively soft, smooth-surfaced body covering the conductive means, said body being electrically permeable to permit transmission of electricity from the conductive means to an object touching the cable and being adapted to drag over a painted vehicle body without damaging the paint; and means for delivering a pulsating electrical charge through the pipe and the electric conductor wire to the cables, whereby a person in a vehicle may drive through the gateway without hindrance or damage to the person or vehicle, while livestock are repelled by the pulsating electrical charge in the cables.

4. In a stock-proof gateway, in combination: upright posts defining the sides of the gateway; bar means mounted on the posts a predetermined distance above the bottoms of the posts and extending effectively continuously across the gateway, said bar means comprising a tube having a plurality of holes; means supporting an end of the tube on a post; an electric conductor wire in the tube; a plurality of spaced, pliable, stock-repelling electrical conductor cables which have their upper ends extending through the holes into the tube and impaled by the conductor wire so that said cables are freely suspended from said bar means, said cables being only in a central area of the gateway which is spaced from both said posts to define a vehicle passage area, each such cable having electrically conductive means and a relatively soft, smooth surfaced body covering the conductive means, said body being electrically permeable to permit transmission of electricity from the conductive means to an object touching the cable and being adapted to drag over a painted vehicle body without damaging the paint; a plurality of heavy rigid, wind-stable stock-repelling rods freely suspended from said bar means between the sides of the

vehicle passage area and the posts; and means for delivering a pulsating electrical charge to the cables and to the rods, whereby a person in a vehicle may drive through the vehicle passage area of the gateway without hindrance or damage to the person or the vehicle, while livestock are repelled by the pulsating electrical charge in the cables and the rods.

5. The device of claim 4 in which the means supporting an end of the tube comprises a metal pipe, the means for delivering a pulsating electrical charge is electrically connected to the pipe and the stock-repelling rods are hung on and electrically connected to the pipe, in which the bar means consists of a smooth surfaced dielectric tube in alignment with the pipe and detachable therefrom by endwise movement, and in which the electric-conductor wire in the tube has an outwardly projecting end portion that hooks directly onto the pipe and may be disconnected therefrom by said endwise movement of the tube.

6. In a stock-proof gateway, in combination: a post defining a side of the gateway; a metal pipe pivoted on the post and having a generally horizontal end portion; a dielectric tube supported on said end portion in alignment therewith and detachable therefrom by endwise movement; means for delivering a pulsating electric current to the pipe; and electrical conductor wire extending longitudinally within the tube, said wire having an end portion electrically connected with the pipe and detachable therefrom by said endwise movement of the tube; and a plurality of pliable, electrically conductive stock-repelling cables freely suspended from the tube, said cables being electrically connected to the conductor wire in the tube.

7. The combination of claim 6 in which the tube has a smooth surface which may drag over a painted surface without damage to said painted surface.

8. The combination of claim 6 in which the tube has pairs of aligned holes, the upper end of each cable extends through a pair of aligned holes, and a longitudinal keeper rod is placed in the tube alongside the conductor wire and clamps the upper ends of the cables against the inside of the tube.

9. The combination of claim 8 in which each cable includes a core wire which is impaled by the conductor wire in the tube.

10. The combination of claim 6 in which the cables include electrically permeable bodies having soft, smooth surfaces, and the tube is smooth surfaced, so the tube and cables may drag over a painted surface without damage to the surface.

11. The combination of claim 8 in which each cable includes a core wire which is impaled by the conductor wire in the tube.

12. A prefabricated gate bar element for a stock-proof gate, said element comprising: a smooth surfaced dielectric tube having a plurality of aligned holes spaced along its length; a core member in said tube and having an end portion projecting a short distance from one end; an electrical conductor wire in said tube and having an end portion projecting a short distance from the tube alongside the projecting portion of the core member for attachment to a source of electric current; and a plurality of electrically conductive pliable stock repelling cables each of which has an end portion extending through one of the holes in the tube and electrically connected to the conductor wire.

References Cited by the Examiner

UNITED STATES PATENTS

1,157,344	10/1915	Thomson	174—110
1,656,329	1/1928	Sievert et al.	174—110
1,794,467	3/1931	Lucas.	
1,956,639	5/1934	Dana et al.	
2,476,233	7/1949	Wood	256—10
2,642,683	6/1953	Meyer	39—92 X
2,731,744	1/1956	Schnell	39—84
2,960,964	11/1960	Murphy	39—92 X
3,100,136	8/1963	D'Ascoli et al.	174—102.2 X
3,223,796	12/1965	Willoughby	256—10 X

FOREIGN PATENTS

546,419	7/1942	Great Britain.
925,683	5/1963	Great Britain.

REINALDO P. MACHADO, *Primary Examiner.*

HARRISON R. MOSELEY, *Examiner.*

D. L. TAYLOR, *Assistant Examiner.*