J. MILLER.

GRINDING MACHINE.

APPLICATION FILED OCT. 1, 1917.

1,262,540. Patented Apr. 9, 1918.

FIG. 1.

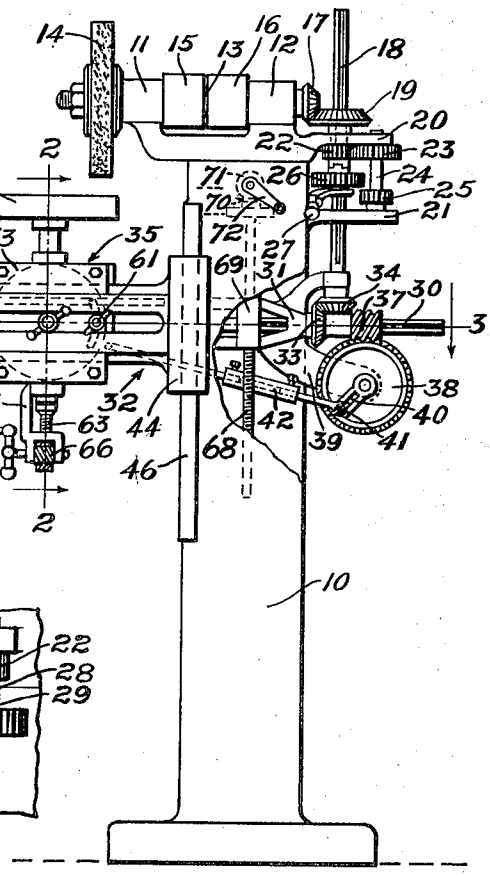

FIG. 2.

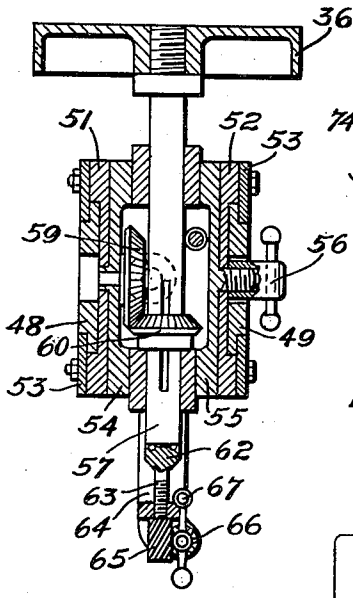

FIG. 4.

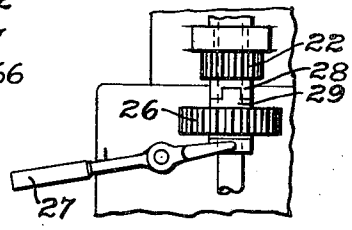

FIG. 3.

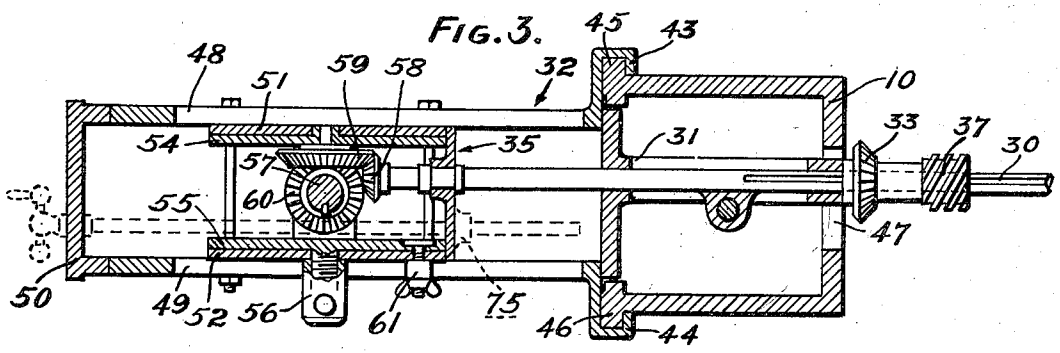

INVENTOR

JULIUS MILLER

BY Hazard and Miller

ATT'YS.

UNITED STATES PATENT OFFICE.

JULIUS MILLER, OF LOS ANGELES, CALIFORNIA.

GRINDING-MACHINE.

1,262,540. Specification of Letters Patent. Patented Apr. 9, 1918.

Application filed October 1, 1917. Serial No. 194,268.

To all whom it may concern:

Be it known that I, JULIUS MILLER, a citizen of the United States, residing at Los Angeles, in the county of Los Angeles and State of California, have invented new and useful Improvements in Grinding-Machines, of which the following is a specification.

This invention relates to a grinding machine and particularly pertains to a machine for grinding and polishing tools such as cutting knives and the like.

The principal object of this invention is to provide a machine which is adapted for grinding and polishing knives, both straight and circular, and the like, and which is fitted with universal adjustment whereby the contour of the knife may be readily ground during the automatic operation of the machine.

Other objects will appear hereinafter.

The invention is illustrated, by way of example, in the accompanying drawings in which:

Figure 1 is a view in side elevation illustrating the completely assembled grinding machine with which the present invention is concerned and particularly disclosing it with parts broken away to more clearly show its interior construction.

Fig. 2 is a view in vertical section on the line 2—2 of Fig. 1 illustrating the mounting of the chuck plate, the manner in which it is driven, and also the means by which it is universally adjusted.

Fig. 3 is a view in horizontal section on the line 3—3 of Fig. 1 illustrating more particularly the drive of the chuck plate.

Fig. 4 is an enlarged fragmentary view in elevation illustrating the speed changing mechanism.

Referring more particularly to the drawings, 10 indicates a pedestal forming the body portion of the machine and upon the top of which boxes 11 and 12 are mounted. A horizontally disposed drive shaft 13 is positioned within these boxes. Secured at one end of the shaft is a grinding wheel 14 formed of some suitable abrasive material, interposed between the two boxes and upon the shaft are pulleys 15 and 16, while at the opposite end of the shaft is secured a bevel driving gear 17. The bevel gear 17 is adapted to drive a vertical splined shaft 18 by means of a complementary bevel gear 19 with which it is in mesh. The gear 19 is supported above a horizontally extending bracket 20 which is formed alongside the pedestal and through which the shaft 18 extends. Another similar bracket 21 is disposed beneath the bracket 20 and in spaced parallel relation thereto. A set of speed changing gears is mounted between these two brackets. This gear set consists of a small gear 22 fixed to a sleeve through which the shaft 18 slides and upon which the gear 19 is fixed and positioned directly beneath the bracket 20 and in continuous mesh with a larger gear 23 fixed upon an auxiliary shaft 24 held between the outer ends of the brackets 20 and 21. and parallel to the shaft 18. A small pinion 25 is secured to the lower end of this shaft and directly above the bracket 21, a speed changing gear 26 being slidably mounted upon the shaft 18 to be moved into and out of engagement with the pinion 25 by means of a shifting lever 27. It will be noted that the gear 22 is formed with a downwardly extending clutch hub 28 which may be engaged by a similar hub 29 upon the upper side of the change gear 26. Thus by manipulation of the lever 27 the speed of rotation of the splined shaft 18 may be varied.

The shaft 18 is provided to drive a horizontal splined shaft 30 which is mounted within a suitable bearing bracket 31 secured to the carriage arm 32 of the machine. This horizontal shaft is fitted with a bevel gear 33 in mesh with a gear 34 upon the lower end of the vertically splined shaft 18. The gear 33 is, of course, splined upon the horizontal shaft 30 and permits the shaft to reciprocate as the carriage 35 of the chuck plate 36 is horizontally moved.

A reciprocating feed mechanism is also driven by the horizontally splined shaft. This consists of a worm gear 37 in mesh with a worm wheel 38 secured upon a bracket 39 formed integral with the carriage arm 32. A slotted crank portion 40 is formed upon the outer face of this wheel to receive an adjustable crank pin 41. This pin connects with one end of a pitman rod 42, the opposite end being fastened to the carriage 35. Suitable means are provided for allowing the length of the pitman rod to be adjusted as desired, this means being independent of the stroke mechanism comprising the pin 41 and the slot 40. Thus as the wheel 38 rotates, the pitman will be reciprocated to impart motion to the carriage 35 upon the carriage frame-work 32.

The carriage arm is adapted to be vertically adjusted upon the pedestal, it having grooved portions 43 and 44 within which flanges 45 and 46 are adapted to slide. These flanges extend vertically along opposite sides of the pedestal and support the arm so that its bearing brackets 31 and 39 may extend through the pedestal and an opening 47 in the opposite wall thereof. The arm consists of a pair of parallel horizontally disposed spaced plates 48 and 49 which are secured together at their outer ends by an end plate 50. Between these plates the carriage 35 is mounted for horizontal movement. As particularly shown in Fig. 2, this carriage has side plates 51 and 52 which bear against the inner faces of the spaced plates 48 and 49 of the carriage arm and have recessed portions within which the plates of the arm are seated. A series of clamping plates 53 are provided to overlap the upper and lower edges of the arm plates 48 and 49 and hold the carriage upon the arm. Interposed between the two side plates 51 and 52 of the carriage are body plates 54 and 55. These plates are formed with central outwardly extending projections which permit the plates to be rotatably held by the side plates 51 and 52 and to be locked by a locking lever 56. These plates are bolted together so that they will form a housing through which a chuck plate shaft 57 is rotatably held. This shaft is driven by the main driving mechanism through the vertical and horizontal shafts, the last-named one of which is fitted with a bevel gear 58 in mesh with a bevel idler gear 59 within the carriage. This gear is in turn in mesh with a chuck shaft gear 60 by which the shaft is driven. This last-named gear is splined upon the shaft so that the chuck plate 36 may have a limited vertical movement. The lower end of the chuck plate shaft 57 is supported upon a thrust bearing 62 which in turn is held upon a screw 63 mounted within a bracket 64 secured beneath the carriage and thereto. The screw 63 is formed with a worm portion 65 in mesh with a worm 66 which is rotated by a handle 67 and will cause the chuck plate 36 with its shaft to be raised and lowered as desired. By means of the drive here shown and the adjustment provided the carriage the chuck plate 36 may be swung to and fro as desired and may thereafter be adjusted and locked by the lock-nut 61 which is mounted upon a screw extending outwardly from the inner portion of the carriage and through an arcuate slotted opening in the side plate 55.

The carriage and its arm may be vertically adjusted by a vertical adjusting screw 68 which extends downwardly within the pedestal 10 and through a threaded sleeve 69 formed upon the bracket portion of the carriage arm. The upper end of the screw 68 is provided with a bevel gear 70 in mesh with a complementary gear 71 which is rotated by a crank 72 accessible from the outside of the pedestal.

In operation, the chuck plate 36 is fitted with clamping members or a jaw chuck of common construction is substituted therefor. A blade to be sharpened or polished is then secured by the said chuck, or a magnetic chuck clamping means. If the blade is a flat disk the cutting edge thereof is disposed beneath the grinding wheel 14 and the carriage swung to dispose the disk at an angle to the surface of the grinding wheel, thus causing a beveled face to be ground around the disk. The carriage is then locked in its angularly adjusted position by the locking means 56 and 61. The carriage arm and the carriage may be then vertically adjusted by rotation of the crank 72 and the adjusting screw 68. The edge of the disk may then be correctly disposed beneath the cutting edge of the grinding wheel by rotation of the horizontal feed screw 73 which is mounted between the plates of the carriage arm and may be rotated by a hand lever 74. Suitable means are provided within a sleeve 75 for engaging and releasing the screw 73 so that after the device has been properly adjusted rotation of the worm wheel 38 will actuate the pitman rod 42 and horizontally reciprocate the carriage. In case the disk is not to be vibrated while the grinding operation is taking place, the pitman rod is disconnected from the carriage. This will allow the chuck plate 36 to be rotated without horizontal reciprocation. In case the speed of rotation of the chuck plate is to be varied, speed changing gear 26 may be adjusted upon the shaft 18 to increase or decrease the speed as desired by either bringing its clutch member to mesh with the clutch member of the gear 22 or its teeth to mesh with the teeth of pinion 25.

It will thus be seen that by the use of the various adjustments here provided, articles of a variety of shapes may be polished or ground in a uniform manner and by an automatic operation.

While I have shown the preferred construction of my grinding machine as now known to me, it will be understood that various changes in the combination, construction and arrangement of parts may be made by those skilled in the art without departing from the spirit of my invention as claimed.

I claim:

1. A grinding machine having a pedestal, a grinding member rotatably mounted thereupon, a grinding carriage mounted for horizontal and vertical movement in relation to the grinding member, a continuously operating pitman for reciprocating the carriage, a

chuck plate disposed upon said carriage, and means whereby the chuck plate may be rotated irrespective of the horizontal and vertical adjustment of the carriage in relation to the pedestal.

2. A grinding machine having a pedestal, a grinding member rotatably mounted thereupon, a grinding carriage mounted for horizontal and vertical movement in relation to the grinding member, means for continuously reciprocating the carriage, a chuck plate disposed upon said carriage, means whereby the chuck plate may be rotated irrespective of the horizontal and vertical adjustment of the carriage in relation to the pedestal, and means whereby the chuck plate may be disposed at angles to the grinding member.

3. A grinding machine comprising a pedestal, a grinding member rotatably disposed thereupon, a carriage arm extending outwardly from the pedestal beneath the grinding member and adapted to be vertically adjusted in relation thereto, a carriage supported by said arm for horizontal adjustment therealong, means for reciprocating the carriage, a chuck plate mounted upon the carriage subjacent the grinding member, and drive means whereby the grinding member and chuck plate may be simultaneously driven irrespective of their adjusted relation to each other.

4. A grinding machine comprising a pedestal, a grinding member rotatably disposed thereupon, a carriage arm extending outwardly from the pedestal beneath the grinding member and adapted to be vertically adjusted in relation thereto, a carriage supported by said arm for horizontal adjustment therealong, means for reciprocating the carriage, a chuck plate mounted upon the carriage subjacent the grinding member; drive means whereby the grinding member and chuck plate may be simultaneously driven irrespective of their adjusted relation to each other, and means for disposing the chuck plate at angles to the horizontal without interrupting the transmission of power thereto.

5. A grinding machine comprising a pedestal, a grinding member rotatably disposed thereupon, a carriage arm extending outwardly from the pedestal beneath the grinding member and adapted to be vertically adjusted in relation thereto, a carriage supported by said arm for horizontal adjustment therealong, means for reciprocating the carriage, a chuck plate mounted upon the carriage subjacent the grinding member, drive means whereby the grinding member and chuck plate may be simultaneously driven irrespective of their adjusted relation to each other, means for disposing the chuck plate at angles to the horizontal without interrupting the transmission of power thereto, and means for horizontally reciprocating the carriage and chuck plate in relation to the grinding member.

6. A grinding machine comprising a pedestal, a grinding member rotatably disposed thereupon, a carriage arm extending outwardly from the pedestal beneath the grinding member and adapted to be vertically adjusted in relation thereto, a carriage supported by said arm for horizontal adjustment therealong, a chuck plate mounted upon the carriage subjacent the grinding member, drive means whereby the grinding member and chuck plate may be simultaneously driven irrespective of their adjusted relation to each other, means for disposing the chuck plate at angles to the horizontal without interrupting the transmission of power thereto, means for horizontally reciprocating the carriage and chuck plate in relation to the grinding member, and means for varying the speed of rotation of the chuck plate in relation to the grinding member.

7. A grinding machine comprising a vertically disposed pedestal, bearings supported at the top thereof, a horizontally disposed shaft mounted upon said bearings and adapted to be driven by a suitable means, a grinding wheel secured at one end of the shaft, a vertically movable carriage arm extending horizontally from one side of the pedestal and beneath the grinding wheel, a carriage slidably mounted for horizontal movement upon said arm, a rotatable chuck plate supported by the carriage subjacent the grinding wheel, power transmission mechanism connecting the horizontally disposed shaft with the chuck plate whereby it may be rotated, means for vertically adjusting the carriage arm, means for horizontally adjusting the carriage, means for angularly adjusting the chuck plate, means for vertically adjusting the chuck plate upon the carriage, means whereby the carriage with its adjusted chuck plate may be horizontally reciprocated without interruption of the delivery of power from the horizontal shaft to the chuck plate, and means for varying the speed of rotation of the chuck plate in relation to the horizontal shaft.

In testimony whereof I have signed my name to this specification.

JULIUS MILLER.