Feb. 26, 1957 P. BORONOW ET AL 2,782,692

SECONDARY HEADBOX

Filed Dec. 8, 1952 3 Sheets-Sheet 1

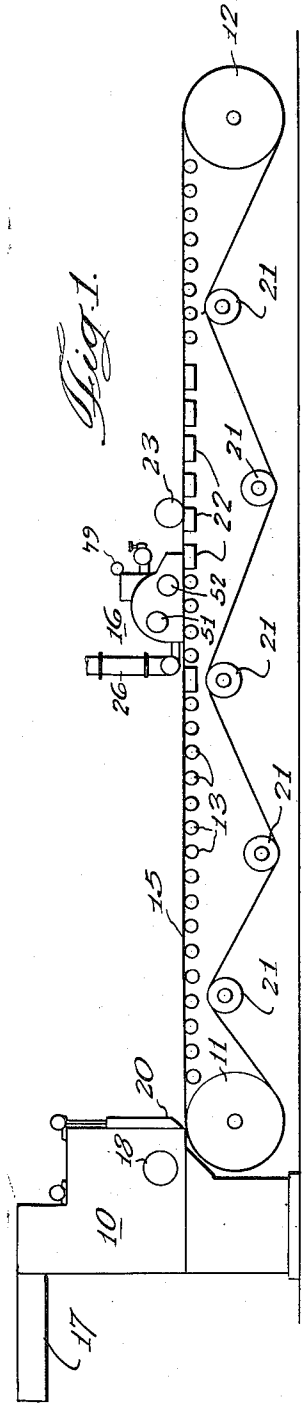

Fig. 1.

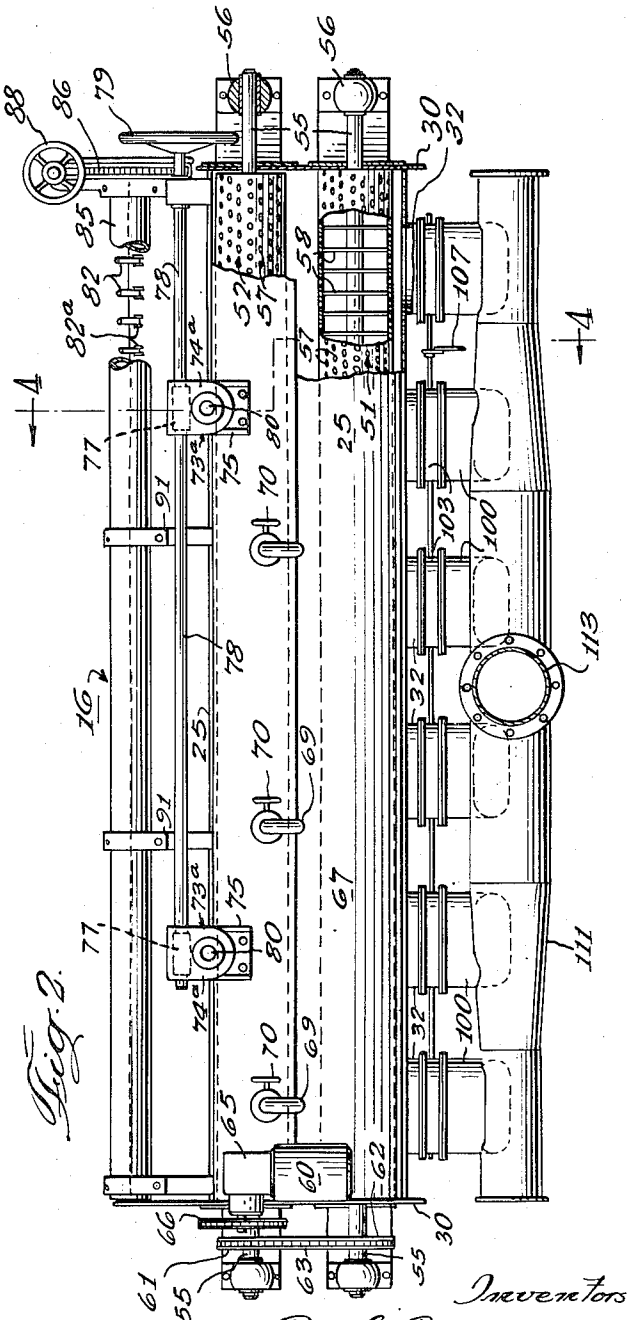

Fig. 2.

Inventors
Paul Boronow
Willard C. Notbohm
By Sears, Glaister & Anderson
attorneys

Feb. 26, 1957 P. BORONOW ET AL 2,782,692

SECONDARY HEADBOX

Filed Dec. 8, 1952 3 Sheets-Sheet 2

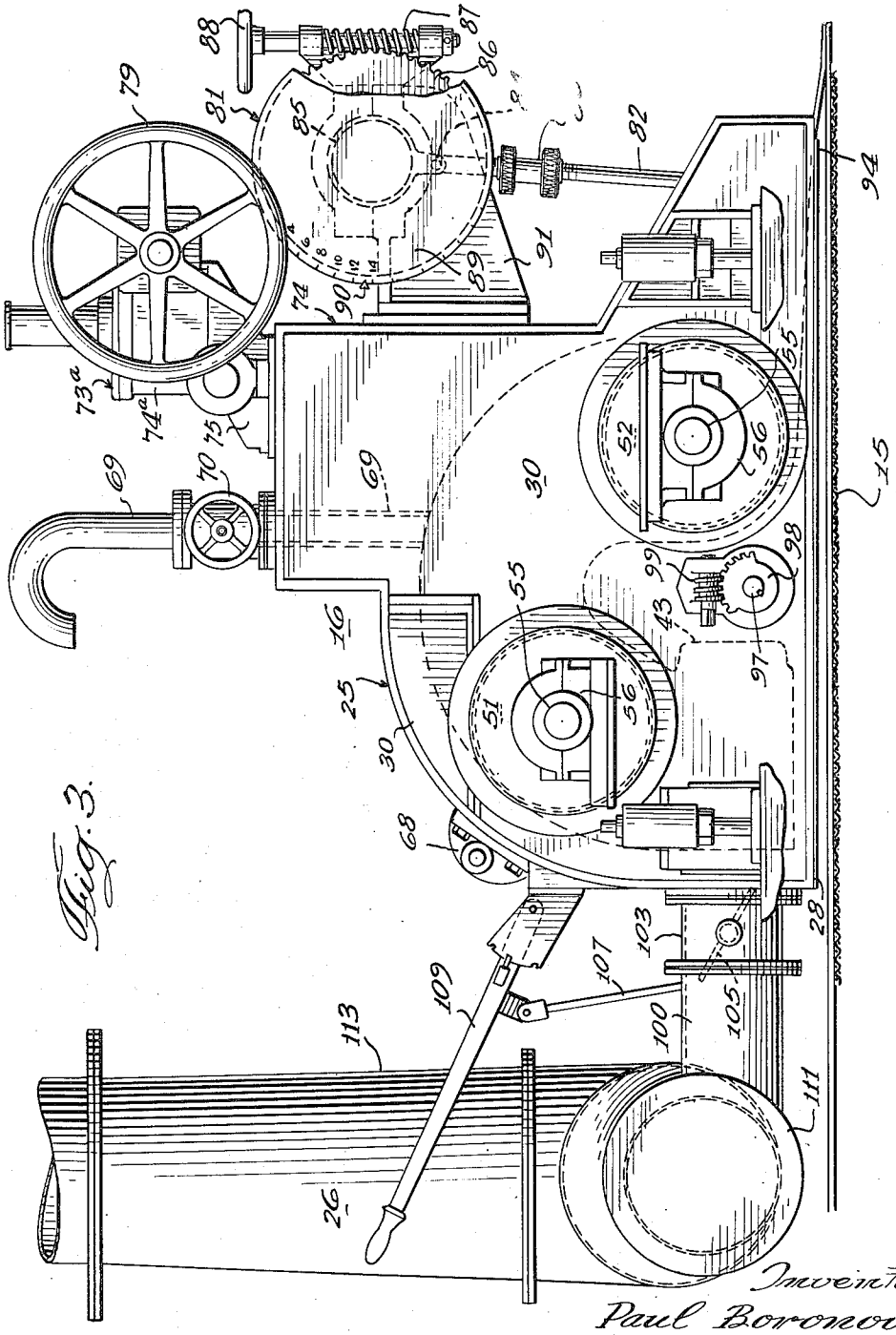

Fig. 3.

Inventors
Paul Boronow
Willard C. Notbohm
By Evans, Kirsten & Anderson
Attorneys

Feb. 26, 1957 P. BORONOW ET AL 2,782,692

SECONDARY HEADBOX

Filed Dec. 8, 1952 3 Sheets-Sheet 3

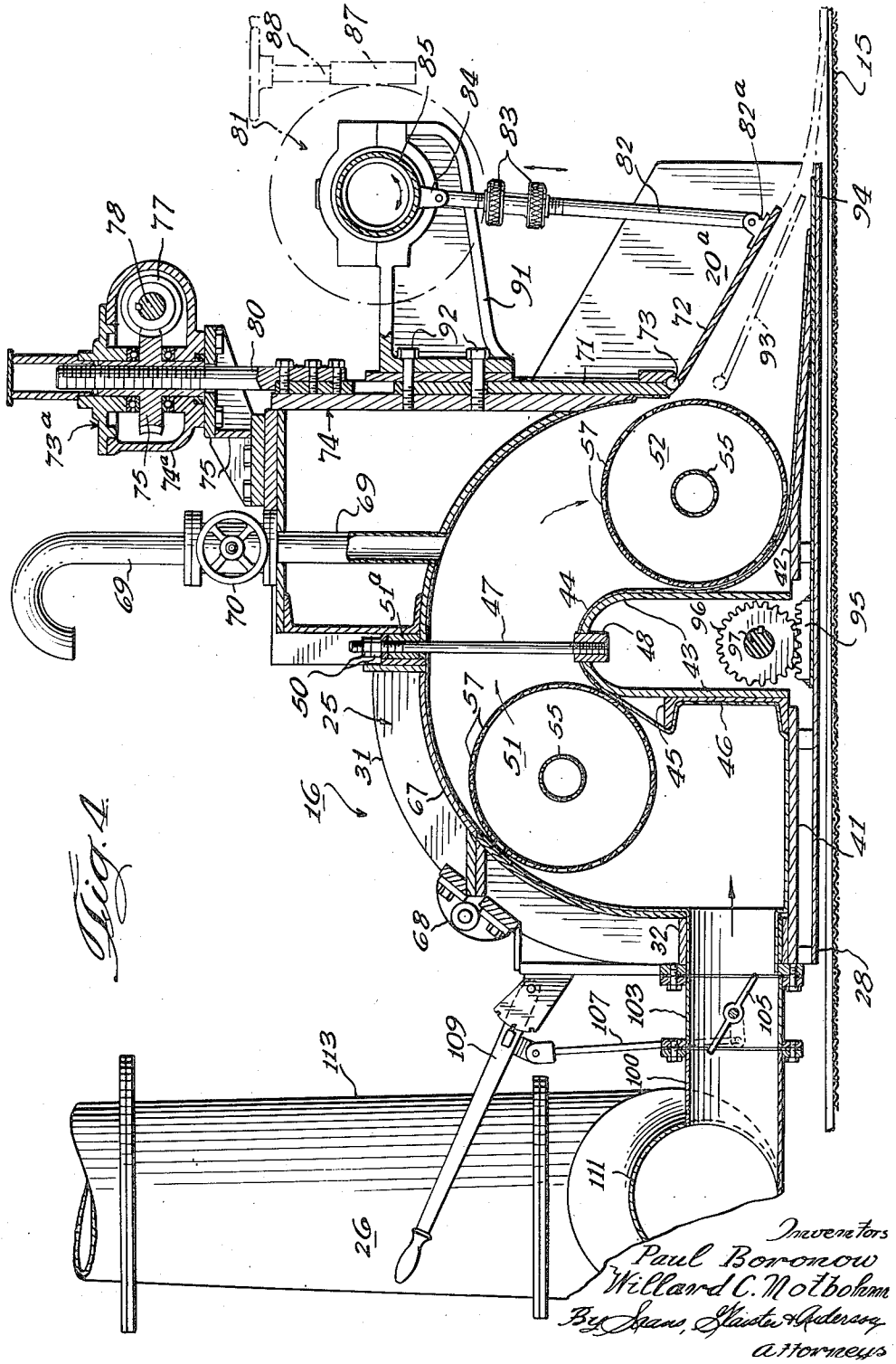

Fig. 4.

Inventors
Paul Boronow
Willard C. Notbohm
By Sears, Glaster & Anderson
Attorneys

United States Patent Office 2,782,692 Patented Feb. 26, 1957

2,782,692

SECONDARY HEADBOX

Paul Boronow, Appleton, and Willard C. Notbohm, Kaukauna, Wis., assignors to Valley Iron Works, Appleton, Wis., a corporation of Wisconsin

Application December 8, 1952, Serial No. 324,708

3 Claims. (Cl. 92—39)

This invention relates generally to paper making machines and, more particularly, relates to an improved paper making machine of a type which is adapted to lay two or more webs upon a single wire of the machine.

In the manufacture of paper, it has been the almost universal practice to initially form a sheet or web of fibers by flowing paper stock onto an endless wire screen, called the "forming wire" or "wire," whereupon the water is drained from the fibers leaving a web which is then pressed and dried to form a sheet of paper. The means for flowing the paper stock onto the wire with the proper uniformity of mixture and motion, and at the desired velocity is generally referred to as the "headbox."

It is known that in the forming of a sheet of paper a second headbox may be used for flowing stock onto a wire. When this is done, the second headbox is located downstream of a first headbox and flows stock, in superposed relation, onto the web formed on the wire by the first headbox. It will be seen that through the use of the second headbox, paper having opposite surfaces of different characteristics may be readily and economically manufactured.

While, as pointed out, it has been known that secondary headboxes are useful in manufacturing certain types of paper sheets and while such headboxes have been employed in the manufacture of various paper sheets, presently known secondary headboxes have not, in general, successfully provided satisfactory sheets of paper having the second web firmly bonded and/or formed onto the initially laid web. We believe that this has resulted from a failure to appreciate that different problems are involved in laying successive webs on a wire than are involved in laying a single web upon a wire.

A main object of the present invention is, therefore, the provision of an improved secondary headbox and a further object of the invention is the provision of a secondary headbox which is adapted to lay a uniform web upon an initially laid web in such a manner that the superposed webs are integrally associated, one with the other. As will become more apparent hereinafter, these and other objects of the invention are accomplished through provision of a pressure type secondary headbox of a particular construction to be described.

The drawings illustrate the apparatus of the invention, and in the drawings:

Figure 1 is a diagrammatic illustration of the wet end of a paper making machine showing the position of the secondary headbox of the invention;

Figure 2 is a plan view of a secondary headbox embodying the features of the invention, certain parts being broken away to more clearly show the structure;

Figure 3 is an enlarged end view of the structure shown in Figure 2, and;

Figure 4 is an enlarged sectional view taken along line 4—4 in Figure 2.

Referring to Figure 1 of the drawings showing the wet end of a paper making machine, which may be of the Fourdrinier or cylinder type, the machine comprises a

main or primary headbox **10** of the gravity flow type, a breast roll **11** disposed at the outlet of the headbox **10**, a couch roll **12** spaced in the machine direction of the web from the breast roll **11**, table rolls **13** between the breast roll **11** and the couch roll **12**, and a forming wire **15** which travels from the breast roll **11** over the table rolls **13** to the couch roll **12** and returns to the breast roll. The machine also includes a secondary headbox **16** which, as pointed out, embodies the features of the invention.

The primary headbox **10** includes a collecting trough **17** for receiving liquid stock from a supply chest (not shown), and a distributing roll **18** over which the stock passes in its flow to a vertically adjustable slice **20**. As the stock leaves the headbox **10** it flows onto the wire **15** and is carried downstream along the machine. The wire **15**, well known as the Fourdrinier wire, comprises an endless belt of woven wire on which the fibers in the liquid stock are felted upon filtration of the liquid through the wire mesh.

The table rolls **13** are disposed downstream of the breast roll **11** and transversely of the wire **15**, the rolls being spaced longitudinally of the machine to maintain the wire in a horizontal plane. The couch roll **12** is located at the downstream end of the path of the wire **15** and is driven by suitable means to provide the drive for the wire. A series of guide rolls **21** serve to suitably support and tension the wire in its return to breast roll **11**.

The machine further includes suction boxes **22** which are disposed at the downstream end of the wire, in underlying relation to the wire **15**. The suction boxes serve to assist in removing the water from the felted stock material. The usual dandy roll **23** is located, in the illustrated structure, downstream of the secondary headbox **16**.

The foregoing description is directed to conventional parts of a paper making machine and is set forth to more clearly disclose the relationship of the secondary headbox of the invention to a paper making machine, and since the present invention is directed primarily toward a particular secondary headbox structure in the illustrated paper making machine, a more detailed description of the remainder of the paper making machine is believed unnecessary, and the following description will be directed, therefore, to the secondary headbox **16** which is located downstream of the primary headbox.

Figures 2 to 4 show the details of the secondary headbox and, as illustrated, the secondary headbox **16** comprises a housing **25** disposed above and extending across the width of the wire **15**. The housing communicates with a closed conduit system **26** which conducts stock under pressure, as by means of a pump, from a stock chest or other supply source (not shown). The headbox further comprises an adjustable slice **20***a* for controlling the flow of stock from the housing **25** onto the forming wire **15**.

Considering the housing in detail, it includes a generally flat bottom plate **28** which extends in a plane parallel to the wire **15**, and a pair of transversely spaced side plates **30** which extend vertically from the bottom plate. The housing further includes a curved top member **31** which connects to the side plates **30** and which extends transversely of the wire **15**. The upstream end of the housing **25** is provided with a series of transversely spaced flanged necks **32** for connecting the housing **25** to the conduit system **26**.

Disposed in the housing **25** are a pair of transversely extending, longitudinally spaced base plates **41** and **42** (Figure 4) which are located above but adjacent the bottom plate **28** of the housing. Intermediate the base plates **41** and **42** is a weir defining section **43** which ex-

tends vertically into the housing **25** and also extends transversely to the paper making machine. This section, in cross-section, is inverted U shape and may be formed from suitable steel plate material. The weir defining section is supported in the housing **25** by a transversely extending channel member **45**, the web of the channel member being attached to the up stream side of the weir defining section **43** and one flange being connected to the up stream base plate **41**.

In order to provide a fluid tight housing, a liner **46** is provided which extends from the flanged necks **32**, over the base plate **41**, around the channel member **45**, and across the top of the weir defining section **43**. The liner **46** curves away from the section **43** and tangentially contacts the downstream base plate **42**, the liner following this plate **42** to the downstream edge.

A series of transversely spaced rods **47** join the weir defining section **43** with the top structure **31** of the headbox **16**, and each rod **47** is preferably adjustably and detachably connected by means including an internally threaded block **48** which is attached to the weir defining section and which receives the lower end of the rod **47**, this end being suitably threaded as shown. The upper end of each rod **47** is also threaded and extends through the top structure **31** of the housing **25**. The rods **47** are carried by nuts **50** which seat on brackets **51***a*, the brackets being mounted on the top structure.

In order to insure proper uniformity of stock and of distribution of the stock, we have provided a pair of distributing rolls **51** and **52** which are disposed on opposite sides of the weir defining section **43**. The distributing roll **51** is preferably placed adjacent the top of the weir defining member **43** on the upstream side and the other roll **52** is placed adjacent to the slice **20***a* with a portion of its surface closely aligned with the curved portion of the liner **46** on the downstream side of the weir defining member. The distributing rolls are each carried on a shaft **55**, the shaft being journalled in suitable bearings **56** (Figure 2) carried by the side plates **30**. Each of the rolls **51** and **52** includes a perforated cylindrical shell **57** supported on the shaft **55** by means of a series of axially spaced discs **58**.

It is important that the shell be perforated in order to have proper distribution of the stock and to assure proper functioning of the secondary headbox **16**. In this connection, the perforations preferably comprise circular openings having a diameter between about ½ and about 1 inch, the openings comprising between about 50 percent and 20 percent open area and being uniformly spaced.

The distributing rolls **51** and **52** are driven at such a rate as to further assure uniform laying of a web upon a preformed web. We have found that the rolls **51** and **52** should be driven at between about 6 and 12 revolutions per minute, the speed being proportioned to the wire speed. In order to rotate the rolls **51** and **52**, as required, drive means **60** is provided for the rolls, the drive means comprising a chain and sprocket arrangement including sprockets **61** and **62** which are keyed to corresponding ends of each of the shafts **55** and connected by a chain **63**. A variable speed motor **65** may be provided to drive the rolls **51** and **52**, the motor rotating one of the shafts **55** by means of a chain **66**. It will be understood, of course, that a gear or other drive arrangement may be employed.

In order to provide access to the interior portion of the housing in order to permit cleaning of the rolls **51** and **52**, etc., a section **67** of the housing **25** is hingedly supported by hinges **68**. This section **67** is located adjacent the top of the housing **25** and permits ready access to the interior portion.

For smooth flow of the stock onto the preformed web, we have found it necessary to vent the housing **25** and for this purpose a series of vents **69** communicate with

the housing **25** at points transversely of the housing. We have found, however, that in order to secure proper flow control of the stock onto the preformed web by the secondary headbox, the headbox should not be ventilated freely, and therefore, vent control valves **70** are provided for limiting the degree of ventililation. As shown in the drawings, the vents **69** communicate with the atmosphere but it will be understood that these may connect to pipe lines or discharge into troughs for the purpose of disposing of any overflow.

The forward portion of the housing **25** carries the slice **20***a*, the slice comprising a vertical plate **71** which extends transversely along the upstream side of the housing. The plate **71** is vertically adjustable and carries a nozzle blade **72** along its lower edge, the nozzle blade **72** being connected by hinges **73** and also being adjustable. The vertical plate **71** is carried on a structure **74** mounted on the housing **25** and vertical adjustment of the plate **71** is effected by adjusting means **73***a* which is mounted on the structure **74**.

The adjusting means comprises a pair of gear housings **74***a* which are supported upon the structure **74** by brackets **75**. Each housing **74***a* journals a gear **75** which is rotated by a worm **77** carried on a transversely extending shaft **78**. The shaft is turned by a manually adjustable wheel **79**. The gears **75**, which are actuated by the worm **77**, threadedly engage rods **80** at their upper end and these rods **80** carry the vertically adjustable plate **71**. Thus, by adjustment of the wheel **79** the plate **71** may be adjusted vertically as desired.

As was pointed out above, the nozzle blade **72** is hingedly supported upon the lower end of the vertically adjustable plate **71** and is adjustable. The upstream end of the nozzle blade **72** may be adjusted by vertical positioning of the plate **71** while the downstream end may be adjusted by a blade adjusting means **81** which permits both coarse and fine adjustment of the nozzle blade in order to assure proper flowing of stock onto the initially formed web.

The blade adjusting means **81** is connected to the blade **72** by means of rods **82** which are connected, at their lower end, adjacent the downstream end of the blade **72** by means of brackets **82***a*. The rods **82** are adjustably lengthened or shortened, as desired, by means of adjusting screws **83** which make possible fine adjustment of the nozzle blade **72**. At their upper end, the rods **82** are connected to lugs **84** carried on a rotatable beam **85**.

In addition to the rods **82** and rotatable beam **85**, the blade adjusting means **81** includes a worm wheel **86** which is keyed to the rotatable beam **85** and which is driven by a worm gear **87**, the worm gear being controlled by a hand wheel **88**. For convenience of adjustment, a stationary indicator plate **89** may be used and a pointer **90** keyed to the rotatable beam so that the desired position of the nozzle blade may be rapidly adjusted.

The rotatable beam is journalled in brackets **91** carried on the housing **25**, the brackets being bolted to the housing by means of bolts **92** which extend through slots (not shown) in the vertically adjustable plate **71**.

It will be seen from the foregoing that the nozzle blade **72** may be adjusted by raising or lowering the adjustable plate **71** or by adjustment of the blade adjusting means **81**. It will be apparent that the nozzle blade may likewise be adjusted by control of both the plate **71** and adjusting means **81**. This multiple adjustment of the blade is quite important in order to assure proper felting of the second web to the initially formed web.

The wide range of adjustment of the nozzle blade **72** is illustrated by the blade shown in dotted outline at **93** in Figure 4 at an extreme position.

The nozzle blade **72** coacts with a lower nozzle blade **94** which is longitudinally adjustable so as to permit proper laying of a secondary web upon an initially formed web. The lower nozzle blade is slidably carried between the bottom plate **28** of the housing **25** and the upstream

base plate 42. For purposes of adjusting the position of the lower nozzle blade 94, racks 95 are carried on the rearward end of the blade, the racks engaging pinions 96 which are keyed to a transversely extending shaft 97 located in the weir defining member 43. The position of the shaft 97, and consequently the lower nozzle blade 94, is controlled by a segmental gear 98 (Figure 3) which is keyed to the shaft and which is driven by a worm 99. The worm may be rotated by a crank (not shown).

As before pointed out, the housing connects to a closed conduit system 26 through flanged necks 32. It is important that the stock be uniformly supplied to the housing in order to assure proper forming of the secondary web. For this purpose, we have employed six necks of oval shape across a housing having a transverse length of 157 inches, each neck measuring 5 inches along the minor axis and measuring 15 inches along the major axis.

The flanged necks 32 connect to flanged sections 100 through valve sections 103. The valve sections 103 have butterfly valves 105 (Figures 3 and 4) disposed therein. These valves are connected by a linkage 107 to a lever 109 which may be adjusted to position the valves 105 at any desired position. It will be noted that these valves are located away from the opening into the main portion of the housing 25.

The flanged sections 100 communicate with a manifold 111 which is supplied by a feed conduit 113 located centrally of the manifold 111. It is important that the manifold be proportioned so that the pressure of the stock to each neck 32 is approximately equal and, for this purpose, the manifold converges toward opposite ends. In this connection, the diameter of the manifold has a diameter at the center of 14 inches and converges down to a diameter of 10 inches at the ends.

As has been pointed out, the structure of the invention is particularly adapted for laying fibers onto an initially formed web and provides a sheet having two webs integrally bonded together. This is made possible through the particular arrangement of the structural elements of the headbox and through control of these elements. The coacting relation of the perforated rolls 51 and 52 in their particular relation in the headbox with the weir defining member 43 and with the adjustable nozzle blades 72 and 94 permits effective laying of a web onto an initially formed web.

In operation of the secondary headbox, stock is supplied to the feed conduit 113 which discharges into the manifold 111. The stock enters the housing 25 through the butterfly valves 105. In the housing, the stock passes through the roll 51 and over the weir defining member 43. The second distributing roll 52 then acts upon the stock which is discharged between the nozzle blades 72 and 94 onto the forming wire 15.

The position of the butterfly valve 105 is adjusted and the speed of rotation of the rolls 51 and 52 are varied to accommodate the headbox for different wire speeds and pressures in the feed conduit 113. Similarly, the weir forming member 43 and nozzle blades 72 and 94 are adjusted to properly lay a second web onto an initially formed web.

The various features of the invention which are believed to be new are set forth in the following claims.

We claim:

1. A secondary headbox for a paper making machine comprising, in combination, a base plate, a pressure tight housing on said base plate which extends transversely to the machine, said housing being generally semi-cylindrical in cross-section and opening downwardly, means for supplying stock at a uniform pressure across the upstream end of said housing, valve means in said supply means for controlling the supply of stock to said housing, a transversely extending, generally inverted U shaped weir defining member which extends into said housing and which is disposed intermediate the upstream and downstream end of said housing so as to define a generally semi-circular path for said stock, a pair of distributing rolls supported in said housing, said distributing rolls being disposed on opposite sides of said weir defining member and extending transversely to the machine, the upstream roll being disposed adjacent the top of said weir defining member and the downstream roll being located adjacent the bottom of said weir defining member, said distributing rolls being perforated so as to have uniform openings which comprise from 50 to 20 percent of the surface area of said rolls, and means for rotating said rolls.

2. A secondary headbox for a paper making machine comprising, in combination, a base plate, a housing on said base plate which extends transversely to the machine, means for supplying stock horizontally to the upstream end of said housing, an adjustable, transversely extending nozzle blade hingedly attached to the downstream end of said housing and extending downstream from said housing, means for vertically adjusting the upstream end of said blade and means for adjusting the downstream end of said blade whereby said blade may be adjusted relative to the flow of stock from said housing, a second cooperating nozzle blade carried on said base plate below said adjustable nozzle blade, said second nozzle blade extending generally horizontally, means for moving said second nozzle blade in an upstream direction forwardly of the upstream end of said adjustable nozzle blade and in a downstream direction rearwardly of the upstream end of said adjustable nozzle blade, a transversely extending, generally inverted U-shaped weir defining member which is disposed in said housing intermediate the upstream and downstream ends of said housing, a pair of distributing rolls supported in said housing, said distributing rolls being disposed on opposite sides of said weir defining member and extending transversely to the machine, the upstream roll being disposed adjacent the top of said weir defining member and the downstream roll being located adjacent the bottom of said weir defining member, a liner extending tangentially to said upstream roll, over the top of said weir defining member and below said downstream roll to a point on said base plate downstream of said downstream roll, said distributing rolls being perforated so as to have uniform openings which comprise from 50 to 20 percent of the surface area of said rolls, and means for rotating said rolls.

3. A secondary headbox for a paper making machine comprising, in combination, a base plate which extends generally horizontally, a generaly semi-cylindrical, transversely extending housing on said base plate, a plurality of supply conduits connected to the upstream end of said housing, a manifold which communicates with said supply conduits and which is proportioned to supply stock to said supply conduits at a uniform pressure, valve means in said supply conduits for controlling the rate of flow of stock to said housing, a transversely extending, substantially inverted U shaped weir defining member which is disposed intermediate the upstream end and downstream end of said housing to define a substantially semi-circular path for the stock, means for vertically adjusting said weir defining member, a pair of perforated distributing rolls disposed on opposite sides of said weir defining member, the upstream roll being disposed adjacent the top of said member and the downstream roll being located adjacent the bottom of said member, a liner extending tangentially to said upstream roll, over the top of said weir defining member and below said downstream roll to a point on said base plate downstream of said downstream roll, an adjustable transversely extending nozzle blade hingedly attached to the downstream end of said housing and extending downstream from said housing, means for vertically adjusting the upstream end of said blade and means for adjusting the downstream end of said blade whereby said blade may be adjusted relative to the flow of stock from said housing, a second cooperating nozzle blade carried on said base plate below said adjustable nozzle blade, means for moving said second nozzle blade in an upstream

direction forwardly of the upstream end of said adjustable nozzle blade and in a downstream direction rearwardly of the upstream end of said adjustable nozzle blade, a transversely extending weir defining member which is disposed in said housing intermediate the upstream and downstream ends of said housing, a pair of distributing rolls supported in said housing, said distributing rolls being disposed on opposite sides of said weir defining member and extending transversely to the machine, said distributing rolls being perforated so as to have uniform openings which comprise from 50 to 20 percent of the surface area of said rolls, and means for rotating said rolls.

References Cited in the file of this patent

UNITED STATES PATENTS

Re. 20,667	Sale	Mar. 8, 1938
1,017,931	Waite et al.	Feb. 20, 1912
1,421,981	Murray	July 4, 1922
1,727,928	Berry	Sept. 10, 1929
2,062,471	Murray	Dec. 1, 1936
2,186,761	Malkin	Jan. 9, 1940

2,203,802	Thaler	June 11, 1940
2,225,435	Kellet	Dec. 17, 1940
2,286,942	Tuten	June 16, 1942
2,325,016	Warren	July 20, 1943
2,329,799	Thorsen	Sept. 21, 1943
2,381,286	Hornbostel et al.	Aug. 7, 1945
2,384,912	Helin	Sept. 18, 1945
2,521,261	Smith et al.	Sept. 5, 1950
2,677,316	Heys	May 4, 1954

FOREIGN PATENTS

1,078	Great Britain	of 1895
758,709	France	Jan. 22, 1934

OTHER REFERENCES

McNaughton: Paper Trade J., December 26, 1940, pp. 30–33.

Tennent: Paper Ind. and Paper World, December 1945, pp. 1357 and 1358.

Fraser: Pulp & Pulp Mag. of Canada, March 1948, p. 74.