PCT

WORLD INTELLECTUAL PROPERTY ORGANIZATION
International Bureau

INTERNATIONAL APPLICATION PUBLISHED UNDER THE PATENT COOPERATION TREATY (PCT)

(51) International Patent Classification 5 :
A61D 7/00, 7/04, A61M 11/00, 15/00, 15/06, 35/00

A1

(11) International Publication Number: WO 95/01137

(43) International Publication Date: 12 January 1995 (12.01.95)

(21) International Application Number: PCT/AU94/00355

(22) International Filing Date: 28 June 1994 (28.06.94)

(30) Priority Data:

PL 9673	29 June 1993 (29.06.93)	AU
PL 9769	2 July 1993 (02.07.93)	AU
PM 0925	31 August 1993 (31.08.93)	AU
PM 1709	8 October 1993 (08.10.93)	AU

(71) Applicant *(for all designated States except US)*: VOGES INNOVATION PTY. LTD. [AU/AU]; 5622 Harbour Terrace, Sanctuary Cove, QLD 4212 (AU).

(72) Inventor; and
(75) Inventor/Applicant *(for US only)*: VOGES, Robert, Martin [AU/AU]; 5622 Harbour Terrace, Sanctuary Cove, QLD 4212 (AU).

(74) Agent: SHELSTON WATERS; 55 Clarence Street, Sydney, NSW 2000 (AU).

(81) Designated States: AM, AT, AU, BB, BG, BR, BY, CA, CH, CN, CZ, DE, DK, ES, FI, GB, GE, HU, JP, KE, KG, KP, KR, KZ, LK, LU, LV, MD, MG, MN, MW, NL, NO, NZ, PL, PT, RO, RU, SD, SE, SI, SK, TJ, TT, UA, US, UZ, VN, European patent (AT, BE, CH, DE, DK, ES, FR, GB, GR, IE, IT, LU, MC, NL, PT, SE), OAPI patent (BF, BJ, CF, CG, CI, CM, GA, GN, ML, MR, NE, SN, TD, TG).

Published
With international search report.

(54) Title: DISPENSER

(57) Abstract

A dispenser (Fig. 1, 1) comprises a reservoir (10) of a physiologically active substance and a droplet ejection device (14), for example a bubble jet or piezoelectric device, which is controlled to issue a predetermined number of discrete droplets of the substance from ejection orifices (15) upon actuation. Device (14) may be actuated by a pressure transducer (19) responsive to inhalation and issue the droplets into an airstream (A) which enters at slot (7) and is then inhaled via mouthpiece (5). In other embodiments (Fig. 5) the dispenser is finger actuated and directed by hand for topical application. The number and/or frequency of droplets issued is programmatically controlled by a control circuit (16) whereby average and total dose of the substance are predetermined.

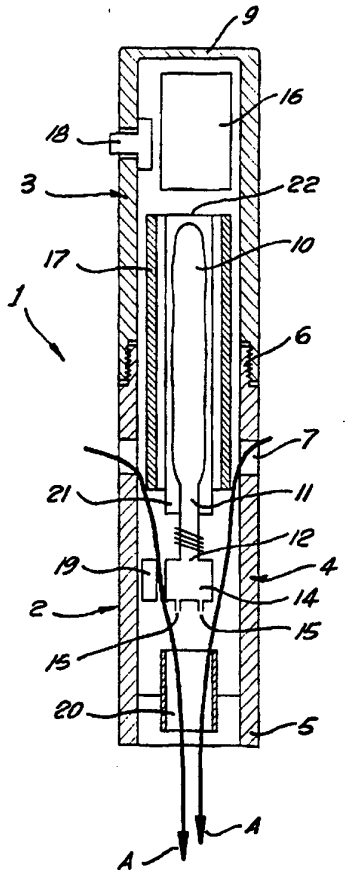

FOR THE PURPOSES OF INFORMATION ONLY

Codes used to identify States party to the PCT on the front pages of pamphlets publishing international applications under the PCT.

AT	Austria	**GB**	United Kingdom	**MR**	Mauritania
AU	Australia	**GE**	Georgia	**MW**	Malawi
BB	Barbados	**GN**	Guinea	**NE**	Niger
BE	Belgium	**GR**	Greece	**NL**	Netherlands
BF	Burkina Faso	**HU**	Hungary	**NO**	Norway
BG	Bulgaria	**IE**	Ireland	**NZ**	New Zealand
BJ	Benin	**IT**	Italy	**PL**	Poland
BR	Brazil	**JP**	Japan	**PT**	Portugal
BY	Belarus	**KE**	Kenya	**RO**	Romania
CA	Canada	**KG**	Kyrgystan	**RU**	Russian Federation
CF	Central African Republic	**KP**	Democratic People's Republic of Korea	**SD**	Sudan
CG	Congo			**SE**	Sweden
CH	Switzerland	**KR**	Republic of Korea	**SI**	Slovenia
CI	Côte d'Ivoire	**KZ**	Kazakhstan	**SK**	Slovakia
CM	Cameroon	**LI**	Liechtenstein	**SN**	Senegal
CN	China	**LK**	Sri Lanka	**TD**	Chad
CS	Czechoslovakia	**LU**	Luxembourg	**TG**	Togo
CZ	Czech Republic	**LV**	Latvia	**TJ**	Tajikistan
DE	Germany	**MC**	Monaco	**TT**	Trinidad and Tobago
DK	Denmark	**MD**	Republic of Moldova	**UA**	Ukraine
ES	Spain	**MG**	Madagascar	**US**	United States of America
FI	Finland	**ML**	Mali	**UZ**	Uzbekistan
FR	France	**MN**	Mongolia	**VN**	Viet Nam
GA	Gabon				

Title: DISPENSER

FIELD OF THE INVENTION

This invention relates to a hand held dispensing device. The device is of particular suitability for the self-administration of physiologically active substances by inhalation and will be herein described with primary emphasis on that use but may be used for other purposes.

BACKGROUND OF THE INVENTION

There are currently three main methods for drug delivery via the respiratory tract, namely metered dose inhalers, dry powder inhalers, and nebulisers.

Metered dose inhalers ("MDI") are widely used in the management of asthma. The MDI comprises a drug packaged with a propellant in a pressurised aerosol container can having a valve which releases a volumetric metered dose of aerosol upon actuation.

These devices are portable, small, and convenient to carry but deliver a dose which varies in quantity, delivery speed, and droplet size distribution as the vapour pressure of the propellant varies. The propellant pressure varies with temperature and decreases progressively as the content becomes depleted so that the range in dose variation may be substantial. Incomplete evaporation of the propellant may cause "sticking" and localised concentration of drug droplets at an impact area, and this in turn can cause undesirable side effects. For example bronchosteroids can cause local immuno-suppression and local fungal infection while local concentration of bronchodilator can lead to swallowing, with unwanted systemic affects. In addition, the use of an MDI requires a degree of synchronisation between manual valve actuation and inhalation which many users find difficult.

Dry powder inhalers ("DPI") devices rely upon a burst of inspired air to fluidise and draw a dose of an active powder into the bronchial tract. While this avoids the synchronisation problem of the MDI, DPI's are sensitive to humidity and may provoke asthma attacks in some individuals sensitive to inhaled powder. Moreover, because the force of inspiration varies from person to person, the dose administered varies.

Nebulisers generate an aerosol by atomising a liquid in a carrier gas stream and require a continuous gas compressor or bulky supply of compressed gas. In general, the droplet size of the aerosol is a function of carrier gas pressure and velocity and hence cannot be easily varied independently of concentration of the active substance in the gas stream. Inhalation reduces the pressure at the nebulizer nozzle and thus dosage and particle size are also influenced by the duration and strength of each breath. Most nebulisers operate continuously during inhalation and exhalation but special control systems can be employed to meter the aerosolised gas flow from the nebuliser to a holding chamber from which the user may draw a charge.

In general the precision of dose delivery of each of these devices is less accurate than desirable and restricts their use to drugs which have broad dosage tolerance. In each case delivery of the active agent to the intended application site is overly dependent on user technique and is variable from dose to dose and person to person. Not only is an improved delivery system required to optimise current nasal and pulmonary therapies utilising locally acting drugs but there has long been recognised a potential for the administration of many additional local and systemic drugs if a more satisfactory means of delivery were

available. Medical advances suggest that pulmonary delivery of drugs such as peptides, proteins and analgesics might be of considerable advantage compared with conventional oral or injection delivery means. For example it has been suggested that insulin for diabetics may be delivered via the pulmonary route if a suitable means of delivery were available. The deposition of drug particles on lung tissue is a function of size, shape and density of particles or droplets. For many drugs, control of one or more of these factors along with precise dose or dose rate control would be desirable. However, at the present time no means of drug delivery is available which adequately meets such requirements.

Many attempts have been made to provide a cigarette substitute which provides nicotine by inhalation but which avoids the need for combustion of tobacco. Provision of a cigarette substitute involves complexities additional to those involved in the administration of a therapeutic agent. Although it is relatively easy to administer nicotine (for example in tablet form, via transdermal patches and the like), such forms do not satisfy habitual smokers because they do not satisfy important complex physiological and psychological affinities acquired by habitual smokers of combustible cigarettes.

In an attempt to provide an acceptable

alternative, many cigarette substitutes have been proposed which provide nicotine on inhalation without combustion of tobacco. Conceptually, such devices are less harmful to the inhaler than smoking, avoid the hazards of passive smoking among bystanders and avoid the fire hazard and environmental problems associated with cigarette smoking. However, despite these major advantages, no device so far proposed has met with consumer acceptance.

Early cigarette substitutes employed a porous carrier impregnated with a liquid nicotine containing composition through which an air stream could be drawn to volatilize nicotine. This approach yielded insufficient nicotine per puff, suffered from a tendency for the carrier to dry out and delivered a variable amount of nicotine per puff, depending on factors such as air temperature, humidity, lung capacity of the user and amount of liquid composition remaining in the carrier.

Subsequent devices delivered nicotine from a pressurised aerosol container from which nicotine can be released by mechanical valve actuator. In one such device the valve is microprocessor controlled to limit the frequency and duration of actuation. However, the dose delivered varies with the vapour pressure of aerosol remaining in the container as well as with duration of valve actuation. The disposable pressure

container, aerosol valve, and CFC propellant add considerably to active substance cost. These devices share the disadvantages of MDI devices previously discussed.

In yet other devices a nicotine containing substance is heated to vapourise an amount of nicotine which is then available for inhalation. The amount of nicotine delivered by such devices is difficult to control and is temperature dependant. In one such device a plurality of nicotine-containing pellets may be heated sequentially so that each liberates a predetermined dose. However, in that case, the dose is fixed during pellet manufacture, particle size of the aerosol is uncontrolled, and temperature of the inhaled air cannot be varied independently of dose.

Factors such as the quantity of nicotine per puff, the temperature of the puff, the draw, the presence and size distribution of flavour particles in the puff and like factors are of considerable importance in satisfying habitual smokers. The various alternatives proposed to date have simply proved unacceptable to most smokers.

To date no device has provided a satisfactory means of adjusting both the quantity of nicotine delivered in each puff in response to user demand and/or maintaining adequate precision and accuracy in the dose quantum metered out. Further the devices

have failed adequately to mimic the sensations obtained during smoking.

Because the requirements for a cigarette substitute are particularly difficult to satisfy, the present invention is herein described primarily with reference to nicotine delivery, but it will be understood that the invention is more generally applicable and addresses the general need for a device which can precisely dispense doses and preferably which can dispense doses of a variety of drugs or other substances and which are adjustable from one individual to another or at different times.

Preferred embodiments of devices of the kind under consideration may be used as a less harmful form of administration of nicotine than smoking or may be used to reduce or eliminate nicotine dependence among those wishing to give up smoking.

It is, without limitation, an object of the present invention to provide a method and means for administration or self-administration of an active substance which avoids at least some of the above discussed disadvantages of prior art. It is an object of preferred embodiments of the invention to provide a method and means for dispensing the active substance for administration via inhalation.

It is an object of other preferred embodiments of the invention to provide a cigarette substitute.

DISCLOSURE OF THE INVENTION

According to one aspect the invention consists in a method for administering a substance to a human or animal subject by inhalation, said method comprising the steps of:

(i) ejecting a predetermined number of discrete droplets of the substance from at least one droplet ejection device in response to an actuation signal, and

(ii) entraining the droplets in an inhalation airstream.

According to a second aspect the invention consists in a method for topical application of a substance to a human or animal subject comprising the steps of:

(1) ejecting a predetermined number of discrete droplets of the substance from at least one droplet ejection device in response to an actuation signal, and

(2) directing the droplets at a selected area or region of the subject.

According to a third aspect the invention consists in an apparatus for administering a substance to a human or animal subject, said apparatus comprising:

a droplet ejection device containing a substance to be administered, means responsive to an actuation

signal to eject a predetermined number of discrete droplets of the substance, and

means for directing the ejected droplets at, or into, the subject.

The substance to be administered may be a therapeutic or other physiologically active agent and may be a liquid, a solution or a suspension for example a colloidal solid in a liquid carrier or an emulsion.

In preferred embodiments of the invention, the droplet ejection device ("DED") device is a piezoelectric device of the kind used in ink jet printing or is a thermal "bubble jet" device of the kind used in ink jet printing.

These devices are sometimes referred to as "droplet on demand" devices. By way of example piezoelectric devices are broadly described in "Ink-Jet Printing" [M. Doring Philips Tech Rev 40, 192-198, 1982 No. 7], while thermal devices are broadly described in "Thermal Ink-Jet Print Cartridge Designers Guide" (2nd Edition Hewlett Packard), both incorporated herein by reference.

Briefly, a typical thermal device consists of a liquid-containing chamber provided with an array of twelve coaxially divided nozzles and has twelve thin film resistors, a resistor being located directly behind each nozzle. Each nozzle supplies a droplet of

liquid from the chamber if and when the corresponding resistor is energized by a short electrical pulse. The resistors thus function as ejection means. Within a few microseconds liquid in contact with the resistor is vapourised and forms a bubble. The vapour bubble grows rapidly and imparts momentum to liquid above the bubble. Some of this liquid is ejected as a droplet from the adjacent nozzle at a velocity typically exceeding 10 meters/second. The ejected volume of liquid is automatically replaced in the chamber from a reservoir by capillary action or by atmospheric pressure acting on collapsible reservoir bladder, a piston or the like. Devices of this kind when used for printing eject a typical drop of about 50 micron diameter at velocities in excess of 10 meters/second and are capable of drop ejection frequencies of up to several thousand droplets per second. The piezoelectric device generates a droplet by means of a pressure wave in the fluid produced by applying a voltage pulse to a piezoelectric ceramic which in this device acts as the ejection means. As with the thermal device, the droplet is ejected through a fine aperture. The fluid is ejected in the form of a fine droplet whose velocity depends on the energy contained in the voltage pulse. In conventional ink jet applications, ejection velocities in excess of 2 meters/second with droplet diameters of around 150

microns and droplet ejection rates of in excess of 6,000 droplets per second can be achieved.

Although conventional "droplet on demand" or "droplet ejection" devices such as used in ink jet printers may be employed in embodiments of the invention, the droplet ejection devices for use in the invention preferably differ from those used for printing. With printheads the ejection orifices are typically arranged as a rectangular matrix of, for example, 2 x 6 or 4 x 6 orifices the droplets being expelled in parallel direction from various combinations of orifice to form characters on a paper moving past the printhead at a distance of from 0.7 mm to 1.0 mm from the orifice. Droplet size is chosen to provide optimum print quality and high dot resolution. For use in the present invention there may be a smaller or greater number of orifices than used for printing and there is no need for the orifices to be arranged in a rectangular matrix with parallel orifice axes. The droplet ejection orifices may, for example, be arranged in a circle and/or may be directed at a converging or diverging angle to the axis of each other. Also for use in the present invention it is often preferred to eject much smaller droplets than are useful for printing. Additionally, the droplet ejection orifices may differ in diameter one from another so that the particle size of the

active agent sprayed from the device may be controlled programmatically by selecting which orifices are used for droplet ejection and particle size may be varied from one time interval to another. Because the size of droplet ejected from the device in response to a predetermined signal is predetermined for a given liquid and device, and because the number and frequency of droplets ejected can be controlled with great precision, it is possible to closely control the total volume of liquid (dose) delivered in a given time interval. For example the device might deliver 1,000 droplets of 50 micron diameter in a second. This volume can in principle be increased or decreased in increments of one droplet.

In preferred embodiments of devices according to the invention the DED is provided with orifices of an aperture size selected to eject a droplet of less than 10 microns diameter and, more preferably, of from 1 to 5 microns diameter. Droplets may be emitted from the DED from a selected orifice in succession or from a plurality of orifices simultaneously.

In preferred embodiments the droplet delivery device or devices may be manually actuated or may actuate in response to an inhalation detector signal or other signal. The apparatus is provided with control means programmed to eject a predetermined number of droplets. The number may be varied in

response to stored data and/or other input signals and programme logic may control such factors as the number of droplets ejected in a predetermined time interval, frequency of droplet ejection, the total number of droplets of active substance issued within a time period, or the like. The control means may be programmed to provide many other desirable functions as hereinafter described.

The means for directing the ejected droplets at or into the subject may for example be a simple mouth piece provided with an air inlet, a nasal shroud, face mask or other spray directing means. The active agent is typically in solution and is emitted from the DED as a fine spray which may be combined with air and/or may be heated prior to inhalation.

BRIEF DESCRIPTION OF DRAWINGS

Various embodiments of the invention will now be described by way of example only and with reference to the accompanying drawings in which:

Figure 1 is a schematic part sectional perspective view of one embodiment of a dispenser (cigarette substitute) according to the invention; and

Figure 2 is a schematic section in an axial plane of the dispenser of Figure 1; and

Figures 3A, 3B and 3C are graphs showing the dispensation of an active ingredient (hatched) as a function of inhalation time in use of the embodiment

of Figure 1, and

Figure 4 is a schematic perspective view of a second embodiment of the invention, and

Figure 5 is a schematic diagram of a third embodiment of the invention.

DESCRIPTION OF PREFERRED EMBODIMENTS

With reference to Figures 1 and 2 there is shown a first embodiment of the invention consisting of a nicotine dispenser comprising a cigarette-shaped hollow tubular body 1 comprising connected body parts 2, 3. Body part 2 has a sidewall 4, a mouthpiece 5 at or adjacent one end and a threaded other end 6. A plurality of axially extending slots 7 penetrate side wall 4. Body part 3 is screw threaded at one end for connection with threaded end 6 of body part 2. Body part 3 is closed or constricted at the end 9 remote from mouthpiece 5.

Nicotine in a suitable solvent (for example water) is provided in a container 10 which is adapted by means of a spiggot shaped outlet and coupling 11, for fluid connection to an inlet port 12 of a droplet ejection device 14. In the present example, device 14 is of the kind used in a bubble jet printer and is provided with one or more droplet ejection orifices 15. Device 14 is controlled by control means 16, for example a microelectronic circuit or microprocessor means. Device 14 and control means 16 as well as

other electrically-powered parts are energised by means of a hollow cylindrical battery 17 via an on-off switch 18 extending through side wall 14 and operable by the user. When a user inhales at mouthpiece 5, a stream of air "A" is drawn into body 1 via slots 7, through body part 2, and mouthpiece 5 into the user's lungs. Slots 7 may be provided with a damper or the like (not illustrated) to control airflow or the device may be provided with a porus plug to control airflow ("draw") on inhalation at mouthpiece 5. A pressure sensor 19 detects a change in pressure in the device due to inhalation or suction at mouthpiece 5 and issues an actuation signal via cables (not illustrated) to control means 16. Control means 16 responds to the actuation signal by issuing an output signal or signals via cables (not illustrated) to device 14 according to pre-programmed parameters or algorithms as hereinafter described. The output or "dose" signal is, or includes, a set of "eject" signals for example a train of voltage pulses. Device 14 responds to the output signal or signals by issuing a plurality of droplets of nicotine solution from orifices 15 of device 14. The liquid containing nicotine issues from device 14 as a fine spray of droplets which are entrained in the inhalation airflow from slots 7 towards mouthpiece 5. The spray typically comprises fine droplets which tend to

vaporise in the airflow. Optionally, heating means 20 are provided. In that case the combination of air with nicotine droplets may be brought into thermally conductive contact with heating means 20 prior to leaving mouthpiece 5. This not only produces a sensation on inhalation similar to that obtained by smoking a combustible cigarette, but also serves to enhance the vaporisation of active substance droplets in the gas stream reducing droplet size.

In the embodiment illustrated in Figs. 1, 2 the active substance container 10 is a collapsible bladder which is housed within a protective hollow cylindrical cartridge 21 having an air vent 22. However other forms of container (for example a cylinder fitted with a piston) could be used. Cartridge 21 is optional and serves to shield bladder 10. Container 10 is disposable or replaceable and may be adapted for fluid communication with inlet 12 of device 14 by means of a threaded, bayonet, or other suitably sealing connection.

Optionally, battery 17 may be of annular form and adapted to sleeve cartridge 21 to save space. Heating means 20 may be infrared heating plates or elements, resistance elements or the like.

Control means 16 desirably comprises a programmable logic circuit for example a microprocessor together with associated Read Only

Memory (ROM), Read and Write Memory (RAM), clocks, power supply and the like and is programmed to control the quantity of nicotine delivered by the DED upon inhalation, subject to predetermined criteria.

In normal operation of the device a drop of pressure at mouthpiece 5 is detected by pressure sensor 19 which issues a signal indicative of inhalation ("actuation" signal) to control means 16 (via cables not illustrated). Control means 16 responds by issuing a "dose" signal to device 14 resulting in a spray of droplets from the device.

The dose signal typically comprises a predetermined set of drop "eject" signals which causes one or more orifices 15 of device 14 to eject a predetermined number of droplets. The dose signal may, for example, be a train of pulses (each pulse being a droplet eject signal) directed serially to one resistance heater of a thermal bubble jet device, or may be a sequence of pulses directed in parallel to a number of such resistance heaters. Since the volume of a droplet issued from a selected orifice 15 is predetermined for a given liquid and orifice, and the number of droplets ejected is controlled by the dose signal, the total volume of nicotine-containing liquid ejected in response to the actuation signal is precisely determined.

Control means 16 controls the pulse spacing,

pulse width, and pulse frequency of the "dose" signal as well as the number of pulses or droplet "eject" signals and therefore determines the time interval during which droplets enter the inhalation air stream i.e. the dose rate. The number of droplets issued and/or the droplet issue frequency may be altered by changing data stored in a control memory. Control means 16 may also be programmed to address specific resistance heaters so as to emit droplets from selected orifices which may differ one from another for example in respect of diameter or orientation.

Control means 16 may also be programmed to provide a time delay between receipt of an actuation signal indicative of inhalation from pressure sensor 19 and the issuance of a "dose signal". The time delay may be varied by changing data stored in a control memory. By controlling the time delay between the leading edge of an actuation signal and issue of the dose signal, and by controlling the frequency of droplet "eject" pulses in the dose signal, the active substance can, for example, be injected into an inhaled air stream as a spike near the start (Fig. 3A) or start and end (Fig. 3B) of an inhalation "puff", or can be spread over the puff duration (Fig. 3C), or may be confined to the leading or trailing portion of a puff. This enables the change in concentration of nicotine during a puff of a cigarette to be more

closely mimicked.

The control means can also be programmed to prevent a dose signal from issue until a predetermined "non repeat" time has elapsed after a preceding dose signal has been issued, notwithstanding receipt of a inhalation signal. This provides a minimum delay between successive doses.

The control means may also be provided with means for counting and storing the total number of dose signals issued within a predetermined time interval and if the total exceeds a predetermined limit (for example 30 doses in a 30 minute period) then the control circuit prevents further dose issue until a further period (e.g. 1 hour) has elapsed. This limits the maximum dose issued within an extended period.

In preferred embodiments of the invention the control means enters a minimum energy drain mode to conserve battery power if for example more than 5 minutes have elapsed since an inhalation was detected.

The apparatus of Fig. 1 may optionally be provided with means for signalling the doses remaining in the device for example by means of a plurality of LEDs 30 which progressively extinguish. Each LED may for example correspond to a dose equivalent to smoking one cigarette and the apparatus might initially store a dose corresponding to one (or several) packets of cigarettes. Other indicator means e.g. an LCD display

could be used.

In summary the control means allows programmable control of factors such as:

(1) Predetermined number of droplets of nicotine issued in a single dose (dose volume).

(2) Frequency of drop issue within a dose (dose rate).

(3) Synchronization of the dose relative to commencement of inhalation.

(4) Injection of dose as a function of time from commencement of inhalation. (Pulse spacing and frequency).

(5) Control of maximum frequency of issue of successive doses or non repeat time (e.g. successive doses
available at not less than 60 second intervals).

(6) Control of maximum number of doses available in a given period i.e. maximum dose rate (e.g. no more than 20 doses available per hour).

(7) Programmed variation of dose from one actuation to another (e.g. successive reduction in dose to reduce drug dependence).

(8) Programmed variation from time to time (e.g. dose to decrease from day to day).

(9) Control of nozzles from which the droplets

issue (and hence spray pattern).

(10) Discrimination for adequacy of inhalation (No dose unless accompanied by sufficient inhalation air).

It will be apparent from the above that the device can be programmed in other ways and to perform other functions by the addition of other sensors - for example temperature or humidity sensors.

In addition the control means may be provided with means by which control parameters may be altered or by which the device may be reprogrammed, for example by interfacing with a keyboard or an external computer.

As will be appreciated, the microprocessor may be pre-programmed or may be user-programmable to control the operation of various DED nozzles, the heater, the airflow or the like in various other combinations, sequences, or as functions of time, temperature, or the like.

Tubular body 1 may be made of any suitable material e.g. plastics, ceramics, precious metals or the like. Mouthpiece 5 may be integral or may be soft-tip, for example of rubber or plastics cardboard, or paper and may be independently disposable. The battery may be replaceable or rechargeable. The dispenser as a whole may be provided as a disposable item or may be reusable. In the latter case, the

product container and DED device will normally be replaceable or may be provided as a combined unit. In that case, the body portion will be separable e.g. via screw-threaded or bayonet coupling into sections to facilitate installation and removal of the product cartridge and/or battery. The product to be dispensed may be for example an aqueous solution of nicotine and may contain additional substances such as glycols, flavours or essences, for example menthol. The active substance may be in the form of a gel, melt, solution or suspension.

If desired, more than one DED 14 may be incorporated whereby to produce droplet streams of different droplet size and in this case, one stream may be fully vapourised by heating plates 20 while a second stream may be directed so that the user receives the sensation of a wet vapour in combination with a dry vapour as occurs when smoking conventional cigarettes.

It is not essential that the spray of active ingredient be combined with air prior to heating and if preferred the spray and/or the air may be separately heated and subsequently combined or the active ingredient may be preheated e.g. by heating means in thermal communication with storage container 10. By selective programming of the controller the smoking instrument can be adjusted to simulate "light"

or "ultralight" cigarette nicotine levels or can be selectively adjustable therebetween. In other embodiments the air intake may be adjusted to vary the air to active substance ratio thus further to facilitate simulation of the sensation of smoking different kinds of cigarettes. The invention is of particular application for assisting those wishing to withdraw from cigarette smoking being programmable to progressively reduce the dose of nicotine obtainable. Devices according to the invention may either be pre-programmed, may be provided with simple means enabling the user to adjust dose within predetermined limits of safety or may be adapted to be programmed by a user e.g. by connection via an interface to a computer.

Although use of a battery is preferred other energization means for example photo cells, may be employed.

It will be understood that the apparatus described may be provided in a different form, for example with a mouthpiece which is flexible whereby the body may be held in a different orientation from the mouthpiece. Similarly the battery need not be annular and may be of any suitable shape.

With reference to Figure 4, there is shown another embodiment of the invention intended to dispense a bronchodilator. Parts in Figure 4 which

correspond in function to parts in Figure 1 are identified with the same numerals. If the substance to be dispensed is heat sensitive it is preferred to use a piezoelectric DED. Disposable cartridge 10 of the embodiment of Figure 4 contains for example, salbutamol. The embodiment of Figure 4 differs from that of Figure 1 in that the body is of rectangular cross-section and in that of the shape and arrangement of components differs.

A further difference is that in the embodiment of Figure 4 the mouthpiece portion 5 is moveable hingedly between a storage position "A" in which it is in alignment with the body (shown in ghost outline in Figure 4) and an active position "B" in which it is inclined at an angle to the body portion.

The mouthpiece may swivel about a swivel pin 40 and the swivel motion may itself actuate an on/off switch to energize the electronic control systems 16.

If desired the apparatus may be provided with manual actuation (e.g. a push-button switch, not illustrated) instead of a pressure-sensitive switch, to control the operation and initiate a "actuation" signal.

In cigarette substitute apparatus according to figure 1, droplet sizes of the order of 1-10 micron diameter or more are acceptable. For pulmonary administration of drugs a small droplet size is

preferred. For this purpose droplet size distribution is normally described as mass median aerodynamic diameter (MMAD), with a standard deviation to indicate the degree of poly dispersity. Particles with MMAD > 5 micron tend to impact on the delivery system and do not readily follow respiratory passages.

For practical purposes droplets of below 10 micron diameter and more preferably of below 5 micron diameter are therefore preferred. If necessary, droplet size can be reduced after ejection from the DED device by directing droplets at each other or at a suitable target designed to further fragment the droplets, or by injecting the droplets into an inhaled stream in a suitable manner. Optionally heating devices can be employed to vapourise the liquid and reduce droplet size.

Suitable drugs for delivery by the apparatus described include, by way of example only, analgesics, peptides and proteins. Other suitable agents include

(i) $ß_2$-bronchodilators - salbutamol, terbutaline sulphate, fenoterol hydrobromide, pirbuterol, reproterol hydrochloride, rimiterol hydrobromide, salmeterol (used extensively for treatment of acute asthma attacks and in prophylactic asthma therapy).

(ii) Antimuscarinic bronchodilators - Ipratropium bromide, oxitropium bromide (used in management of chronic bronchitis).

(iii) Corticosteroids - beclomethasone dipropionate, budesonide: used in prophylactic asthma therapy.

(iv) Sodium chromoglycate, nedocromil sodium (used in prophylactic asthma therapy).Antibiotic Therapy:

(v) Pentamidine isethionate - (antibiotic for the prophylaxis and treatment of pneumonia due to Pneumocystis carinii, a common secondary infection in HIV/AIDS patients).

Local Action:

(vi) Range of proprietary 'Over the Counter' nasal decongestant sprays for common cold symptoms,

(vii) Corticosteroids - beclomethasone dipropionate, betamethasone sodium phosphate, budesonide, fluticasone propionate (used in prophylaxis and treatment of allergic rhinitis).

(viii) Sodium chromoglycate (used in prophylaxis of allergic rhinitis).

(ix) Anti-infective agents - e.g. dexamethasone, fusafungine, chlorhexadine hydrochloride (used in treatment of infection due to nasal

staphylococci).

Systemic Action

(x) Nasal administration of peptides related to antidiuretic hormone - desmopressin, lypressin (used in management of diabetes insipidus).

Apparatus for use in dispensing certain drugs may comprise programmed control means which issues a predetemined dose into each of a plurality of successive inhalations and in that case may be provided with a "dose complete" signal for example via LED 31 to indicate to a user when a full dose has been dispensed. The dose can be varied according to the composition being dispensed and the prescription for each user.

With reference to fig. 5, there is shown a further embodiment of the invention which is adapted to dispense an active substance such as an anaesthetic, antiseptic or a liquid medication by topical application rather than by inhalation.

In surgery or medical treatment it is sometimes necessary to apply an anaesthetic, antiseptic or other fluid over a local area by means of an aerosol sprayed from a pressurised container. However it is difficult to control the amount and location of spray application. Moreover the use of CFC propellant as used in the aerosol is environmentally undesirable.

Parts of Fig. 5 corresponding in function to parts in the embodiment of Fig. 1 are identified by the same numerals.

With reference to Figure 5 there is shown a dispenser comprising a pen shaped hollow tubular body 1 assembled from hollow body parts 2, 3. Body part 2 has a nozzle opening 25 at one end while body part 3 is closed at the dispenser end remote from nozzle opening 4. Body parts 2, 3 are separably connected at 6, for example by interengaging thread formations. A cartridge 10 is situated within body 1 and contains a liquid. Cartridge 10 is in fluid communication with one or more droplet ejector devices 14 via one or more conduits 11. In the present example DED 14 is a piezoelectric crystal or thermal resistor bubble jet device such as used in an ink jet print head. Device 14 can be energized from a battery 17 via an on off control switch 18 adapted for finger operation while the device is hand held. For example the device may be held between thumb and middle finger and may carry a push button switch 18 which is operable by the first finger. In the embodiment of Figure 5 when control 18 is actuated, device 14 delivers liquid from cartridge 10 as a spray directed outwardly from the dispenser via nozzle 25. The duration of the spray is determined by whether the switch 8 is "on" or "off".

In a more highly preferred embodiment of the

invention the volume sprayed per unit time is also be controlled. For example, the dispenser 1 is provided with one or more switches 26 (for example touch pad switches) which condition control means 16 (for example a microprocessor circuit) which in turn controls a number of bubble jet orifices 15 of device 14 through which spray droplets are emitted and/or which controls the repetition rate of device 14 and thus the number of droplets delivered in a unit of time. Thus the spray rate may be selectively light or heavy depending on the number of orifices emitting droplets and depending on the repetition rate of droplet emission.

If the device 14 is provided with a plurality of emitting orifices which are directed at preselected angles to the axis of the body, droplets of liquid may be directed in the axial direction or selectively at predetermined angles to the axial direction by circuit actuation of a selected jet orifice 15, or a selected combination of droplet ejection device jet orifices 15. In this manner a spray pattern may be selected by means of a suitable finger control forming part of a suitable micro-electric circuit controlling means 16. If all emitting orifices 15 are directed axially the spray pattern may be made selectively narrow or broad.

Alternatively control switch 26 may be adapted to select between a number of predetermined total dose

dispensations or an additional control means may be provided to select total dose. In such manner, if the cartridge contains for example a liquid local anaesthetic, a surgeon can select a preset quantity and spray pattern of local anaesthetic to be applied during surgery. The surgeon could thus select between application of a small, medium or large dose, at each actuation of a switch 26 and could preselect between a narrow, medium, or broad spray pattern.

If desired the control circuit 16 may be provided with means to prevent inadvertent excessive use, for example by limiting the maximum dose of liquid which can be applied within a prespecified time period.

Also, if desired, the control circuit can be provided with security locking which overrides the on/off switch. For example the device might be provided with a programmable security code and might be incapable of issuing its contents unless and until a corresponding code is entered by an intending user.

For this purpose the device may have a plug 28, socket or transmitter/receiver which permits the device to interface with an external computer. The external computer might then also record data indicative of use, doses issued, user identification, patient identification, or similar data. The external computer may also re-enter new data in one or more memories in the control circuit of the dispenser for

example dose values, time parameters, security codes. This data is then used in controlling response of the device to actuation by the user.

Other forms of hand control, for example touch sensitive switches or rotary switches may be employed instead of touch pads 26.

Control circuit 26 may utilise digital or analogue control and may employ a microprocessor, or discrete circuit components. In preferred embodiments the circuit includes a memory, preferably of type which is not erased due to lack of battery power such as a ramtron chip. The circuit further desirably includes a display screen such as a single line LCD 27. The circuit may also employ a clock and be able to utilise and display date and time data and may have a key pad or equivalent input device or may rely for input upon communication with an external key pad. The LCD could be used to display data such as number of remaining doses or time and date of last dose.

Although the embodiment of fig. 5 has been described with reference to dispensation of a liquid it will be appreciated that the material to be dispensed can be in the form of a gel, colloid, powder suspension or any other form suitable for dispensation via the device 14.

In a further embodiment of the invention (not illustrated) the dispenser is provided with a

plurality of cartridges or chambers each adapted to contain a respective medication in liquid or solution form. The control means may be programmed to provide an alarm (for example a beeper or flashing LED) at predetermined times or at predetermined times and dates. On next actuation of the device, it then delivers a predetermined dose of one medication or a combination or succession of medications each in a respective predetermined dose.

This embodiment is thus ideally suited for pre-programmed treatment of persons suffering from dementia or the like and for persons having to take a number of different medications each according to a schedule and who find self-administration confusing.

The device itself prompts the user to accept a dose and issues the appropriate doses of prescribed medication.

As will be apparent to those skilled in the art, features described in relation to one of the described embodiments may be combined with those of another.

Although the control signals have been described as pulses, those skilled in the art will appreciate that the signals can take a great variety of forms and may employ voltage or current signals, AC or DC signals, digital or analogue signals or the like, as required for operation of the DED selected. It is not necessary literally to count signals to eject a

predetermined number of droplets and it will be understood that such expediencies as issuing eject signals at a predetermined frequency for a selected time interval are considered equivalent and within the scope hereof. Although the invention has been described in terms of electronic devices, fluidic devices and non electronic means of control may be employed.

Those skilled in the printing art will appreciate that with many DED devices a principal ejected droplet sometimes has trailing satellite droplets which are very much smaller. References herein to a predetermined number of droplets refer to the number of principal droplets ejected, but if necessary the DED can be calibrated to issue a desired dose taking account of satellite drops without departing from the inventive concept hereof. Likewise it will be understood that the control of liquid viscosity is important and that therefore the volume of one substance issued in response to a given set of "eject" signals will not necessarily be the same as for another substance. However those skilled in the art will have no difficulty based on the teaching hereof in programming devices according to the invention to take account of these factors.

As will be apparent to those skilled in the art from the description herein contained, the device may

be embodied in other forms or arrangements and using other construction materials without departing from the scope of the invention herein disclosed.

CLAIMS:

1. A method for administering a substance to a human or animal subject by inhalation, said method comprising the steps of:

(i) ejecting a predetermined number of discrete droplets of the substance from at least one droplet ejection device in response to an actuation signal, and

(ii) entraining the droplets in an inhalation airstream.

2. A method for topical application of a substance to a human or animal subject comprising the steps of:

(1) ejecting a predetermined number of discrete droplets of the substance from at least one droplet ejection device in response to an actuation signal, and

(2) directing the droplets at a selected area or region of the subject.

3. A method according to Claim 1 or 2 further comprising the step of controlling the frequency of issue of droplets of the predetermined number.

4. A method according to any one of the preceding claims comprising the step of ejecting a second predetermined number of droplets after ejecting a first predetermined number of droplets and controlling a time interval between ejection of the first and the second predetermined number of droplets.

5. A method according to any one of the preceding claims wherein the at least one droplet ejection device has a plurality of ejection orifices.

6. A method according to Claim 5 wherein the device or devices collectively have ejection orifice which differs in diameter from another and the size of the droplets is controlled by selectively issuing the droplets from an orifice of selected diameter.

7. A method according to any one of the preceding claims wherein the device or devices collectively have ejection orifices directed in differing directions, further comprising the step of controlling a spray pattern by selectively issuing droplets from a selected set of said orifices.

8. A method according to any one of the preceding claims further comprising the step of measuring a "non repeat" time interval commencing after issue of a first predetermined number of droplets and controlling the droplet ejection device to prevent issue of droplets in response to an actuation signal during said "non repeat" time interval.

9. A method according to any one of the preceding claims further comprising controlling the droplet ejection device so that the total number of droplets issued during a predetermined time period does not exceed a predetermined "maximum dose" number of droplets.

10. A method according to Claim 1 wherein the actuation signal is a signal indicative of inhalation by the subject.

11. A method according to Claim 10 wherein the ejection of a predetermined number of droplets is synchronised with an inhalation by the subject.

12. A method according to Claims 10 or 11 further comprising the step of ejecting the predetermined number of droplets in a time interval which is shorter than an inhalation period, and delaying the ejection of the droplets relative to the commencement of inhalation.

13. A method according to any one of Claims 10 to 12 wherein the droplets are selected to have a size of less than 10 microns.

14. A method according to any one of Claims 10 to 13 wherein the droplets are selected to have a size of from 1 to 5 microns.

15. A method according to any one of Claims 10 to 13 wherein the airstream is heated.

16. A method according to any one of Claims 10 to 15 wherein the substance is, or contains, nicotine.

17. A method according to any one of Claims 10 to 16 wherein the substance is selected from the group consisting of peptides, proteins, analgesics and saline solutions.

18. A method according to any one of Claims 10 to 16

wherein the substance is selected for systemic therapy via pulmonary absorption.

19. A method substantially as herein described with reference to any one of the examples.

20. Apparatus for administering a substance to a human or animal subject, said apparatus comprising:

a droplet ejection device containing a substance to be administered, means responsive to an actuation signal to eject a predetermined number of discrete droplets of the substance, and

means for directing the ejected droplets at, or into, the subject.

21. Apparatus according to Claim 20 wherein the droplet ejection device comprises at least one droplet ejection orifice and ejection means responsive to an "eject" signal to eject a droplet from said orifice.

22. Apparatus according to Claim 20 or 21 wherein the droplet ejection device is a thermal bubble jet device.

23. Apparatus according to Claim 20 or 21 wherein the droplet ejection device is a piezoelectric device.

24. Apparatus according to any one of Claims 20 to 23 wherein the means responsive to an actuation signal comprises control means for issue of a set of "eject" signals the set consisting of a predetermined number of droplet "eject" signals each eject signal being effective to issue a droplet.

25. Apparatus according to any one of Claims 21 to 24 comprising control means adapted to vary the number of discrete droplets ejected in accordance with a predetermined programme.

26. Apparatus according to any one of Claims 20 to 25 comprising control means adapted to vary the frequency of issue of discrete droplets in accordance with a predetermined programme.

27. Apparatus according to any one of Claims 20 to 26 wherein the droplet ejection device has a plurality of droplet ejection orifices.

28. Apparatus according to Claim 27 wherein the droplet ejection device has a droplet ejection means associated with each ejection orifice.

29. Apparatus according to Claim 28 wherein a set of eject signals is directed to more than one ejection means.

30. Apparatus according to any one of Claims 20 to 29 wherein the droplet ejection device has at least one droplet ejection orifice having dimensions selected so as to eject a droplet of less than 10 micron diameter of the substance.

31. Apparatus according to any one of Claims 20 to 30 having a plurality of droplet ejection orifices defined by one or by a plurality of droplet ejection devices and wherein the direction of ejection of droplets from one orifice is not coaxial with that of

another.

32. Apparatus according to any one of Claims 20 to 31 having a plurality of droplet ejection orifices defined by one or more droplet ejection devices each orifice being associated with ejection means and wherein the dimensions of one orifice differ from that of another whereby the size of a droplet ejected is programmatically selectable by issuing an eject signal to a selected ejection means.

33. Apparatus according to any one of Claims 20 to 32 comprising a reservoir containing the substance and in fluid communication with a droplet ejection device.

34. Apparatus according to any one of Claims 20 to 33 wherein the means for directing the ejected droplet comprises a mouthpiece.

35. Apparatus according to any one of Claims 20 to 34 wherein the means for directing the ejected droplets comprises a nasal shroud or mask.

36. An apparatus according to any one of Claims 20 to 34 having at least one air admission vent and wherein the droplet or droplets are entrained an airstream flowing from the vent to the means for directing ejected droplets.

37. An apparatus according to any one of Claims 20 to 36 further comprising means to detect an inhalation of the subject and for issuing an actuation signal in response to a detected inhalation.

38. An apparatus according to any one of Claims 20 to 37 wherein the number of droplets is selected in accordance with a desired therapeutic dose volume of the substance.

39. An apparatus according to any one of Claims 20 to 38 comprising means for directing ejected drops into the bronchial tract of a subject, means for detecting in use of the apparatus a pressure drop due to inhalation by the subject, and means for synchronising issue of a set of "eject" signals with the detected inhalation.

40. An apparatus according to any one of Claims 20 to 39 comprising inhalation detection means and control means including timer means for delaying the issue of droplets so as to occur during a predetermined period after the commencement of and during an inhalation.

41. An apparatus according to any one of Claims 20 to 40 comprising the control means including counter means adapted to limit the maximum frequency of issue of successive doses.

42. Apparatus according to any one of Claims 20 to 41 comprising means for selecting orifices of the droplet ejection device from which droplets are ejected so as to vary the spray pattern.

43. Apparatus according to any one of Claims 20 to 42 adapted for use as an inhalation device and having heating means adapted to raise the temperature of an

airstream to be inhaled.

44. Apparatus according to any one of Claims 20 to 43 comprising means adapted to store a security code and provided with means for rendering the device inoperable to issue the substance unless and until a corresponding code is entered.

45. Apparatus according to any one of Claims 20 to 44 wherein the means for directing comprise a nozzle.

46. Apparatus according to claim 45 adapted to be hand-held and comprising one or more actuators providing signals for control of droplet ejection, said one or more actuators being positioned for use by a hand holding the apparatus.

47. Apparatus according to any one of Claims 20 to 46 comprising a plurality of reservoirs each containing a respective active agent, each reservoir communicating with a respective droplet ejection device, and control means for controlling the number of droplets issued from each droplet ejection device according to a predetermined programme.

48. Apparatus substantially as herein described with reference to any one of the drawings.

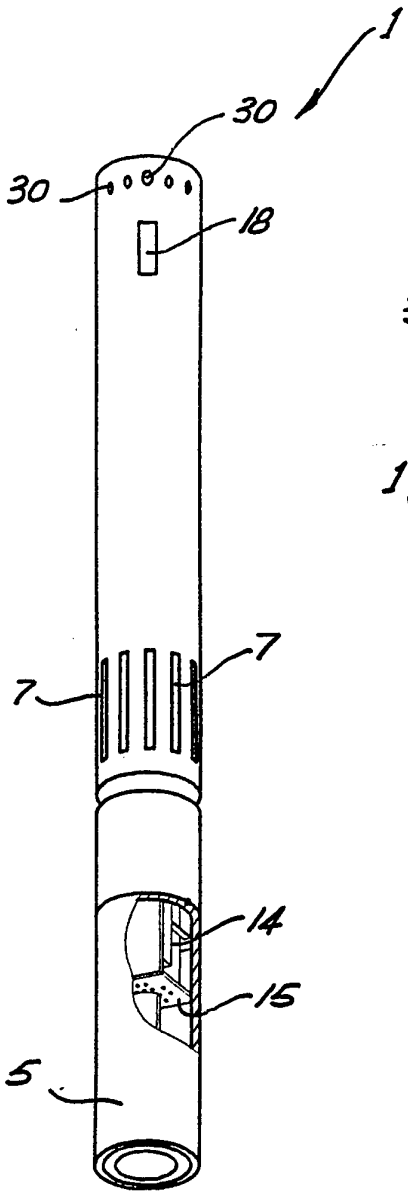
1
30
30
18
7
7
14
15
5

FIG. 1

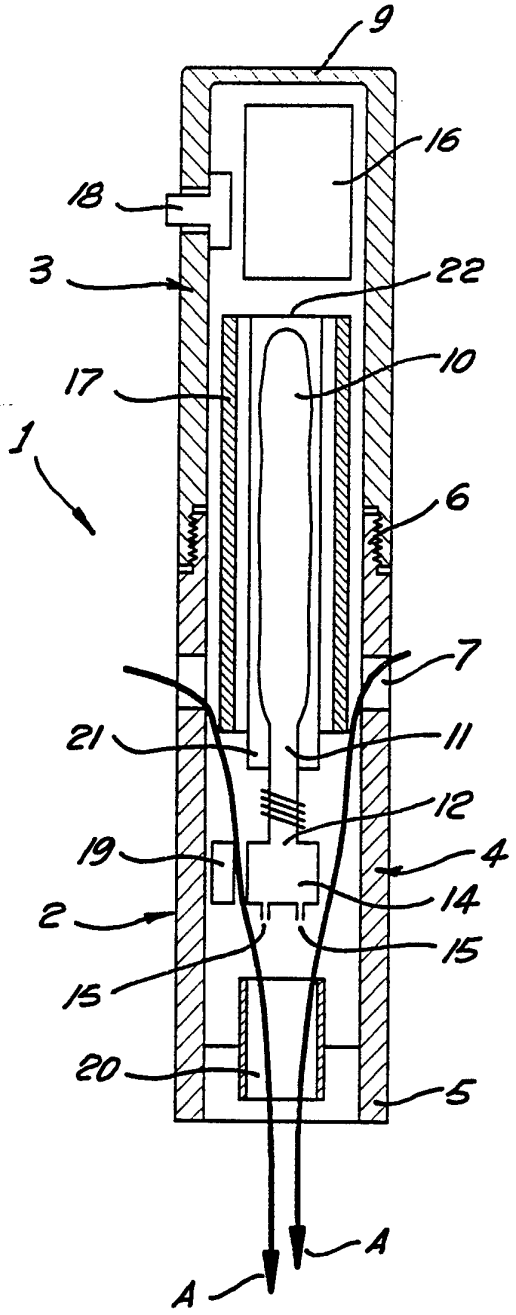
9
16
18
3
22
17
10
1
6
7
21
11
12
19
4
14
2
15
15
20
5
A
A

FIG. 2

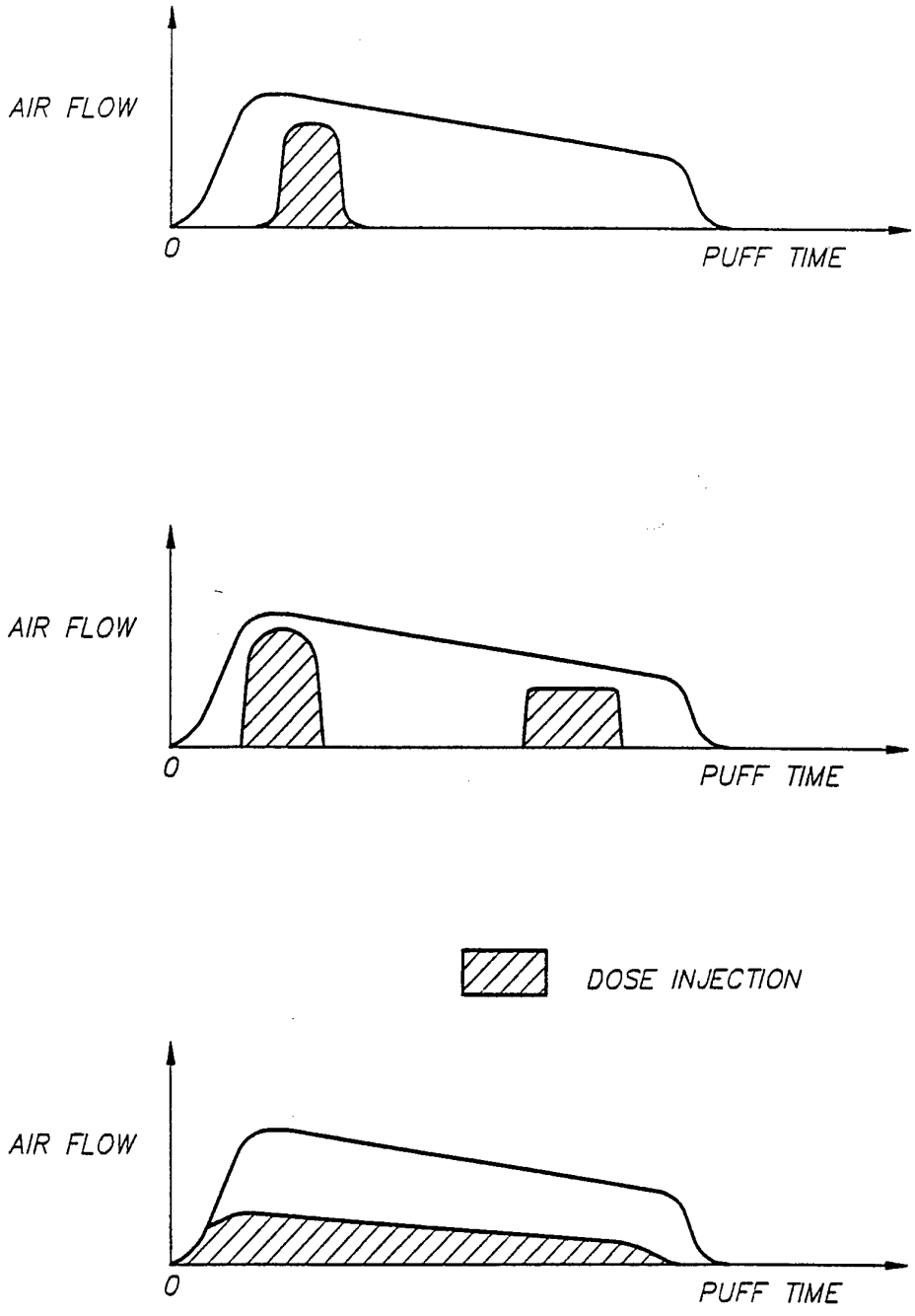
AIR FLOW
0
PUFF TIME
AIR FLOW
0
PUFF TIME
DOSE INJECTION
AIR FLOW
0
PUFF TIME

FIG. 3

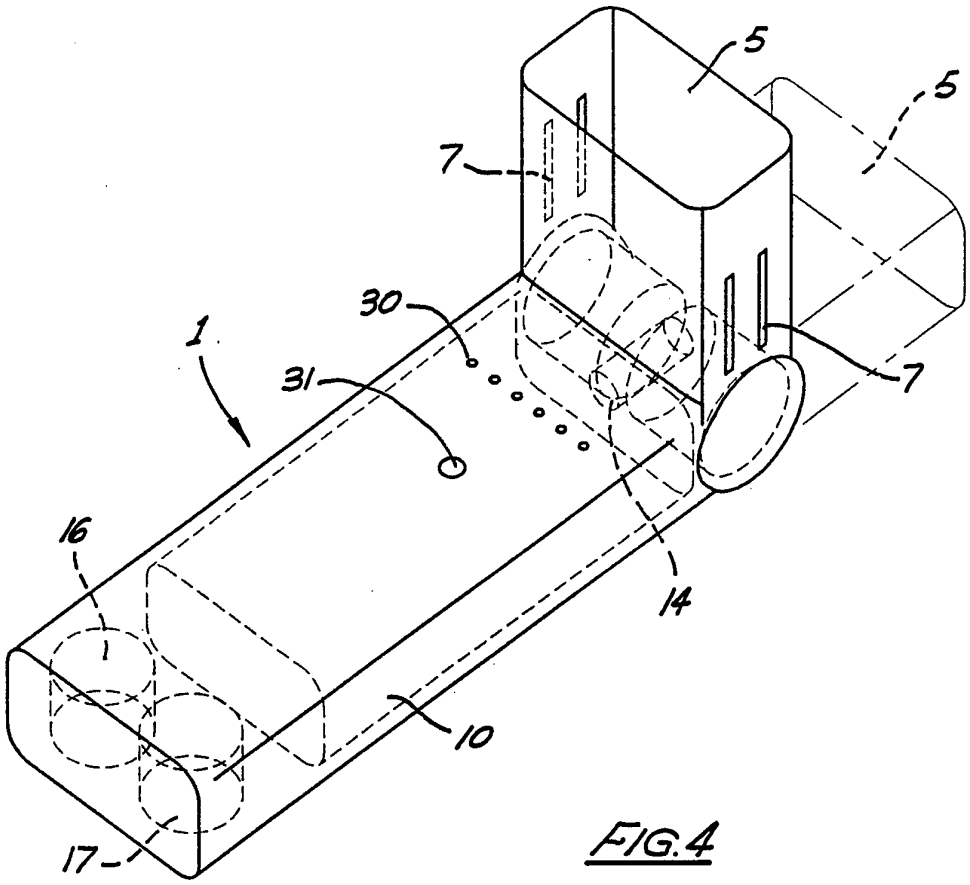

FIG. 4

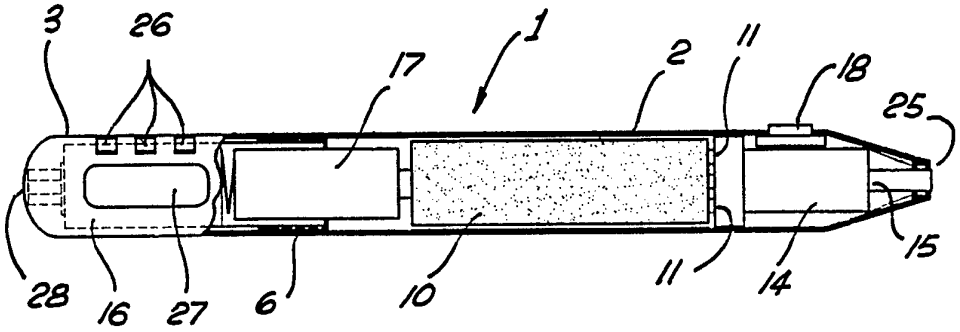

FIG. 5

INTERNATIONAL SEARCH REPORT

International application No.
PCT/AU 94/00355

A. CLASSIFICATION OF SUBJECT MATTER

Int. Cl.[5] A61D 7/00, 7/04, A61M 11/00, 15/00, 15/06, 35/00

According to International Patent Classification (IPC) or to both national classification and IPC

B. FIELDS SEARCHED

Minimum documentation searched (classification system followed by classification symbols)

IPC: A61D 7/00, 7/04, A61M 11/00, 11/06, 11/08, 15/00, 15/06, 35/00

Documentation searched other than minimum documentation to the extent that such documents are included in the fields searched

AU: IPC as above

Electronic data base consulted during the international search (name of data base, and where practicable, search terms used)

DERWENT: INHAL: () ACTIVAT: or ACTIVAT: () INHAL: or PIEZOELECTRIC or THERMAL () BUBBLE () JET or PROGRAM:

C. DOCUMENTS CONSIDERED TO BE RELEVANT

Category*	Citation of document, with indication, where appropriate, of the relevant passages	Relevant to Claim No.
P,X	US,A,5284133 (BURNS et al) 8 February 1994 (08.02.94) Entire document	1,3-4,8-11,13-14, 16-18,20-21,23,25-26, 30,33-39,41,44-46
X	WO,A,87/04354 (AKTIEBOLAGET DRACO) 30 July 1987 (30.07.87) Page 2 lines 20-31, page 7 lines 23-33	1,3-4,8-11,13-14, 16-18,20-21,25-26,30, 33-39,41,44-46
Y		12,15,40,43

[X] Further documents are listed in the continuation of Box C.

[X] See patent family annex.

* Special categories of cited documents :

"A" document defining the general state of the art which is not considered to be of particular relevance

"E" earlier document but published on or after the international filing date

"L" document which may throw doubts on priority claim(s) or which is cited to establish the publication date of another citation or other special reason (as specified)

"O" document referring to an oral disclosure, use, exhibition or other means

"P" document published prior to the international filing date but later than the priority date claimed

"T" later document published after the international filing date or priority date and not in conflict with the application but cited to understand the principle or theory underlying the invention

"X" document of particular relevance; the claimed invention cannot be considered novel or cannot be considered to involve an inventive step when the document is taken alone

"Y" document of particular relevance; the claimed invention cannot be considered to involve an inventive step when the document is combined with one or more other such documents, such combination being obvious to a person skilled in the art

"&" document member of the same patent family

Date of the actual completion of the international search	Date of mailing of the international search report
7 September 1994 (07.09.94)	19 Sept 1994 (19.09.94)

Name and mailing address of the ISA/AU

AUSTRALIAN INDUSTRIAL PROPERTY ORGANISATION
PO BOX 200
WODEN ACT 2606
AUSTRALIA

Facsimile No. (06) 2853929

Authorized officer

A. DAVIES

Telephone No. (06) 2832072

C(Continuation). DOCUMENTS CONSIDERED TO BE RELEVANT

Category*	Citation of document, with indication, where appropriate of the relevant passages	Relevant to Claim No.
	EP,A,432992 (BESPAK PLC) 19 June 1991 (19.06.91)	
X	Column 3 lines 29-36, column 3 line 52 - column 8 line 13, column 9 lines 5-13	1,3-5,8-9,20-21,23, 25-27,30-31,33-36,38, 41,45-46
Y		12,15,40,43
	WO,A,89/06147 (ETELAHAMEEN KEUHKOVAMMAYHDISTYS R.Y.) 13 July 1989 (13.07.89)	
X	Entire document	1,3-4,9-11,13-14, 16-18,20-21,23, 25-26,30,33-39, 41,45-46
Y		12,15,40,43
	WO,A,92/11050 (MINNESOTA MINING AND MANUFACTURING CO.) 9 July 1992 (09.07.92)	
X	Page 3 line 36 - page 5 line 33	1,3-5,9-11,13-14, 16-18,20-21,23,25-28, 30-31,33-39,41,45-46
Y		12,15,40,43
	EP,A,42468 (JAEGER) 30 December 1981 (30.12.81)	
X	Entire document	1,3-4,10-14,16-18, 20-21,25-26,30,33-37, 39-40,45,47
Y		12,15,40,43
	DD,A,205820 (GRZONKA) 11 January 1984 (11.01.84)	
X	Entire document	2-5,20-21,25-28,30-31, 33,36,38,45
	DE,A,3908909 (SCHUMACHER) 20 September 1990 (20.09.90)	
X	Entire document	1,20,33-36,43,45,47
Y		12,15,40,43
	US,A,4987861 (LEMIRE et al) 29 January 1991 (29.01.91)	
X	Entire document	2,5,20-21,27-28,31,45
	EP,A,213753 (STATE OF ISRAEL-MINISTRY OF AGRICULTURE) 11 March 1987 (11.03.87)	
X	Entire document	2,20-21,45
	WO,A,93/13730 (AGRITRONICS INTERNATIONAL S.A.)	
P,X	22 July 1993 (22.07.93)	1,3-5,20-21,25,28, 30-31,33-36,38,43, 45,47
	US,A,4934358 (NILSSON et al) 19 June 1990 (19.06.90)	
X	Figure 2, column 2 lines 23-34, column 4 lines 21-30	1,3-4,8-9,20-21,25-26, 30,33-35,38,41,45,47
Y		12,15,40,43
	WO,A,93/03856 (HABLEY MEDICAL TECHNOLOGY CORP.) 4 March 1993 (04.03.93)	
X		2-4,9,20-21,33,36, 38,45-46

INTERNATIONAL SEARCH REPORT
Information on patent family membe.

International application No.
PCT/AU 94/00355

This Annex lists the known "A" publication level patent family members relating to the patent documents cited in the above-mentioned international search report. The Australian Patent Office is in no way liable for these particulars which are merely given for the purpose of information.

Patent Document Cited in Search Report		Patent Family Member					
US	5284133						
WO	87/04354	AU	69342/87	DE	8715575	DK	389/86
		DK	4665/87	EP	232235	EP	252147
		FI	874221	IL	81368	JP	62249656
		NO	873805	NZ	219021	PT	84193
		ZA	8700409	DK	2076/86	DK	4675/86
		DK	165/87				
EP	432992	AT	93418	AU	67897/90	AU	637658
		BR	9006291	CA	2031907	CN	1054916
		CN	1019952	DE	69002926	EP	432992
		EP	542723	ES	2030348	ES	2043293
		FI	906089	FI	931780	FR	2655572
		GB	8928086	GB	2240494	GB	9225004
		GB	2263076	IL	96597	IT	9022344
		JP	4100557	JP	6040984	NO	905350
		NZ	236418	PT	96169	US	5152456
		US	5261601	ZA	9009776	GB	9017563
		GB	9026804				
WO	89/06147	FI	875797	FI	82808	GB	8918752
		GB	2219512	JP	2502791	SE	8902851
		US	5063922				
WO	92/11050	AU	90895/91	EP	563120	GB	9027257
		GB	9101527				
EP	42468	AT	19939	DE	3023648	DE	3174689
		US	4558710				
DD	205820						
DE	3908909						
US	4987861						
EP	213753	AT	56607	CA	1256338	DE	3674299
		IL	76001	US	4674490	IL	78589
WO	93/13730	BE	1006103				
US	4934358	AT	96336	AU	72003/87	AU	605151
		DE	3787977	DK	6098/87	EP	410962
		FI	884384	JP	63502885	NO	874873
		NO	163670	SE	8601351	WO	87/05813
WO	93/03856	AU	24901/92				

END OF ANNEX