March 3, 1931. D. R. PARKS 1,795,280

MOLDED KNOB

Filed March 27, 1928

FIG. 1.

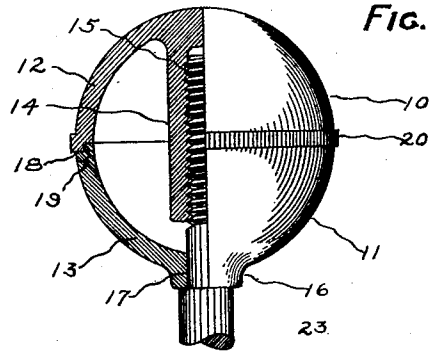

FIG. 2.

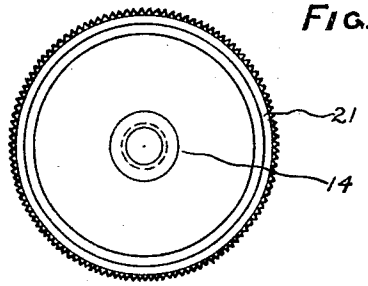

FIG. 3.

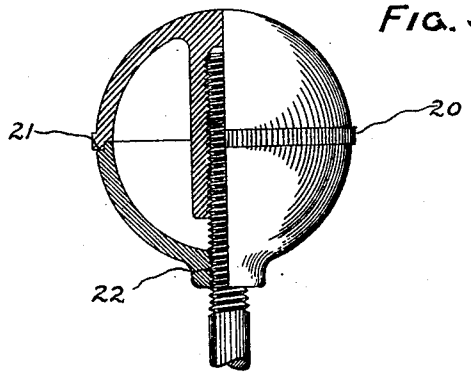

INVENTOR
Daniel R. Parks
BY Jas. N. Nielsen
ATTORNEY

Patented Mar. 3, 1931 1,795,280

UNITED STATES PATENT OFFICE

DANIEL R. PARKS, OF BOONTON, NEW JERSEY

MOLDED KNOB

Application filed March 27, 1928. Serial No. 265,183.

This invention relates to molded knobs, such as gear shift lever knobs and similar articles molded from plastic material, and a process for their manufacture. Articles of this character require a configuration that not only affords a satisfactory hand grip, but also presents a pleasing appearance.

Plastic compositions of the phenolic resinoid type are well adapted for the manufacture of such articles on account of their good molding qualities and the permanence and attractive finish of the molded articles. They are particularly desirable for gear shift balls because of their light weight, since gear shift levers reflect or respond to the vibrations of the car in which they are mounted like inverted pendulums, and this effect is decreased as the weight of the ball is lessened.

By the term "resinoid" is intended that type of synthetic product which in its initial condition or A stage is fusible and soluble, but is transformable to an infusible insoluble condition or C stage upon application of heat. As supplied to the molder, the resinoid content of the composition is in the A stage to the extent that it fuses and flows when heat is first applied, but continued heating soon causes the transformation to the C stage. This plastic and hardening nature of the resinoid molding composition and other properties, particularly that of shrinkage during a molding operation, present problems as to disposal of the material and provision for adequate contact with the metallic member to which it is to be attached. Experience has shown in the molding of solid balls or knobs, that distortion from shrinkage is so apt to occur that, if threads are molded therein for engagement with a metallic member, retapping is generally necessary; consequently it has been regarded as better practice to supply metal inserts as the attaching means. These, however, add materially to the cost as they require preliminary machine, knurling, etc., and furthermore they complicate the molding operation, for such inserts must be firmly anchored to avoid displacement when molding pressure is applied.

Inserts have the additional undesirable effect that they add very materially to the weight of a knob molded from resinous compositions and thereby the response to the car vibrations is markedly increased.

In accordance with the present invention, articles are molded from compositions containing phenolic condensation products with the absence of metallic or other inserts and furthermore with economy in the use of the compositions, while securing articles of pleasing appearance and requisite configuration.

In the drawings which illustrate embodiments of the invention:

Fig. 1 is a view in elevation of a knob shown partly in section and mounted upon a gear shift lever provided with a shoulder;

Fig. 2 is a plan view of the top member of the knob; and

Fig. 3 is a view in elevation and partly in section of a modified form of knob mounted on a gear shift lever without a shoulder.

The knob is preferably composed as two members, an upper concave-convex member 10 and a lower cup-shaped member 11, having walls 12, 13 of substantially uniform thickness. The upper member is provided with an axially extending integral and centrally disposed sleeve or socket 14 projecting from the interior surface and whose wall is substantially of uniform thickness approximating that of the member. The socket is cast with an internal thread 15.

The lower cup-shaped member 11 has a thickened central portion 16 through which extends an aperture 17. The upper edge 18 of the member is recessed as at 19, and the lower edge of the upper member has a peripheral lip 21 adapted to fit the recess 19 The opening 17 may be provided with an internal thread 22 as shown in the modified form of Fig. 3.

When the parts of the knob are assembled, the opening 17 is in alignment with the socket 14 and the lip 21 fits into the recess 19. If the lever to which the knob is attached, has a shoulder 23 to contact the member, as shown in Fig. 1, it is not necessary that the opening 17 be threaded. In this case the threaded end 24 of the lever is engaged by the socket 14 and the lower member is thus forced against the

shoulder. The socket is preferably made long enough to subtend substantially the space enclosed by the members when assembled and thus give extended contact with the lever. Preferably, however, contact with the lower member is avoided so that, as the upper member is turned upon the lever and thereby drawn against the lower member, the members are slightly sprung through their contacting rims or edges and thus are locked to each other and to the gear shift lever.

With the lower member threaded onto the lever as in Fig. 3, a lock nut action is secured when the upper member is screwed down upon the lower one.

Members having the configuration as above described can be molded with the threads cast in the socket and without requiring any metal insert. This may be ascribed to the hollow construction and to the substantially uniform thickness of the socket whereby all parts shrink at equal rates and distortion is thereby avoided. In actual operation it is found that such members can be molded with a threaded pin fitted within the mold to form the internal threads of the socket; and upon opening of the mold parts, the molded article is readily removed by unscrewing it from the pin while warm. The molded member does not perceptibly distort upon cooling and it can be attached to a gear shift lever without the necessity of any further operations upon it.

Likewise the molding of the threaded aperture in the lower or cup-shaped member is effected by inserting a threaded pin in the mold from which the molded part is removed by unscrewing. Any shrinkage of the material during cooling is uniform so that no distortion of the tapped aperture is noticeable.

The description and illustrations given are specific to gear shift lever knobs. It is evident, however, that molded knobs made in accordance with this invention, are adapted for other uses. Furthermore, while compositions of the resinoid type have been specified and are preferred, other moldable plastic materials, including those containing natural resins or gums, as, for example, shellac, can be substituted. It is to be understood, therefore, that the invention is not restricted to the specific use or composition given, but is to be accorded a scope commensurate with the appended claims.

I claim:

1. As an article of manufacture a hollow knob molded from a phenolic resinoid composition for attachment to the threaded end of an elongated metallic rod and comprising a concave convex member having an axially extending integral socket projecting from its interior surface, said socket having an internal thread cast therein, a cup-shaped member with a thickened central portion having an aperture therethrough cast with an internal thread, said cup-shaped member having a recess cast in the rim, and a lip extending from the edge of the concave-convex member for engaging said recess, said socket having a length sufficient to extend within, but not to contact the cup-shaped member when assembled, whereby a spring locking action can be secured when the members are attached to the rod.

2. As an article of manufacture a hollow knob molded from a resinoid composition and comprising a concave convex member having a threaded socket molded integrally therewith, and a cup-shaped member contacting with said concave-convex member and having a threaded aperture in alignment with said socket whereby, when assembled upon a threaded rod, one member serves as a lock nut for the other member.

In testimony whereof I affix my signature.

DANIEL R. PARKS.