(No Model.) 4 Sheets—Sheet 1.

C. G. P. DE LAVAL.

APPARATUS FOR STEADYING MOTION OF RAPIDLY ROTATING SHAFTS.

No. 563,191. Patented June 30, 1896.

Fig. 1.

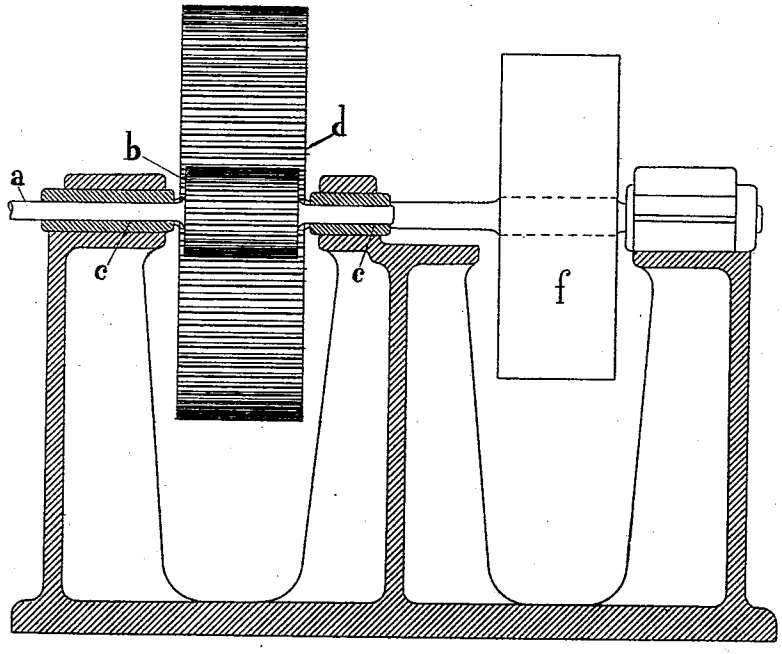

WITNESSES:
Charles Schroeder
William Duehm

INVENTOR.
C. G. P. de Laval
by Goepel & Poegeus
ATTORNEYS

ANDREW B. GRAHAM, PHOTO-LITHO. WASHINGTON, D.C.

(No Model.) 4 Sheets—Sheet 2.

C. G. P DE LAVAL.

APPARATUS FOR STEADYING MOTION OF RAPIDLY ROTATING SHAFTS.

No. 563,191. Patented June 30, 1896.

Fig. 2.

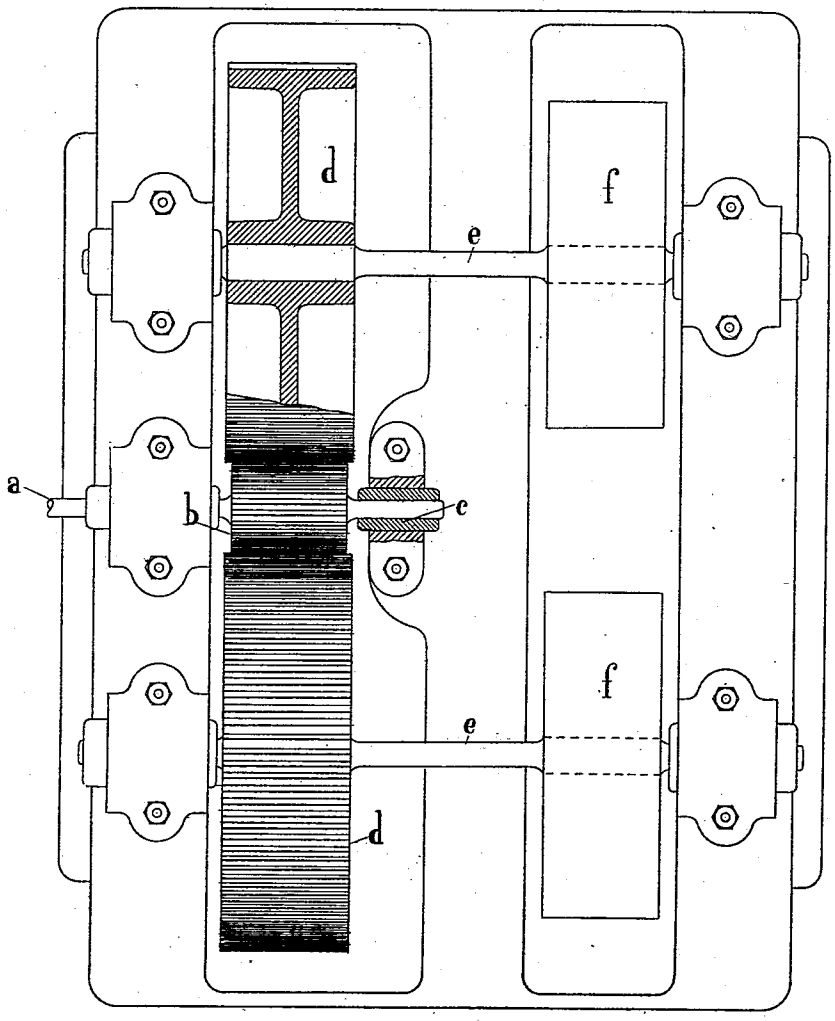

WITNESSES:
Charles Schroeder
William Dunkin

INVENTOR
C. G. P. de Laval
by Gaepel & Kuegeler
ATTORNEYS.

ANDREW B. GRAHAM, PHOTO-LITHO. WASHINGTON, D.C.

(No Model.) 4 Sheets—Sheet 3.

C. G. P. DE LAVAL.

APPARATUS FOR STEADYING MOTION OF RAPIDLY ROTATING SHAFTS.

No. 563,191. Patented June 30, 1896.

Fig. 3

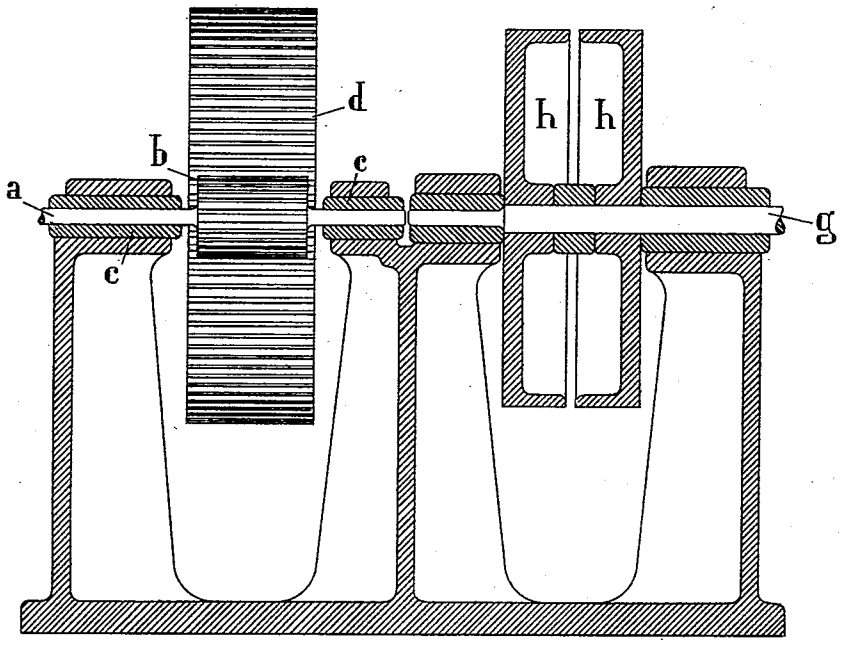

WITNESSES:
Charles Schroeder
William Duehm

INVENTOR
C. G. P. de Laval
by Guepel & Raegener
ATTORNEYS

ANDREW B. GRAHAM, PHOTO-LITHO. WASHINGTON D.C.

(No Model.) 4 Sheets—Sheet 4.

C. G. P. DE LAVAL.

APPARATUS FOR STEADYING MOTION OF RAPIDLY ROTATING SHAFTS.

No. 563,191. Patented June 30, 1896.

Fig. 4.

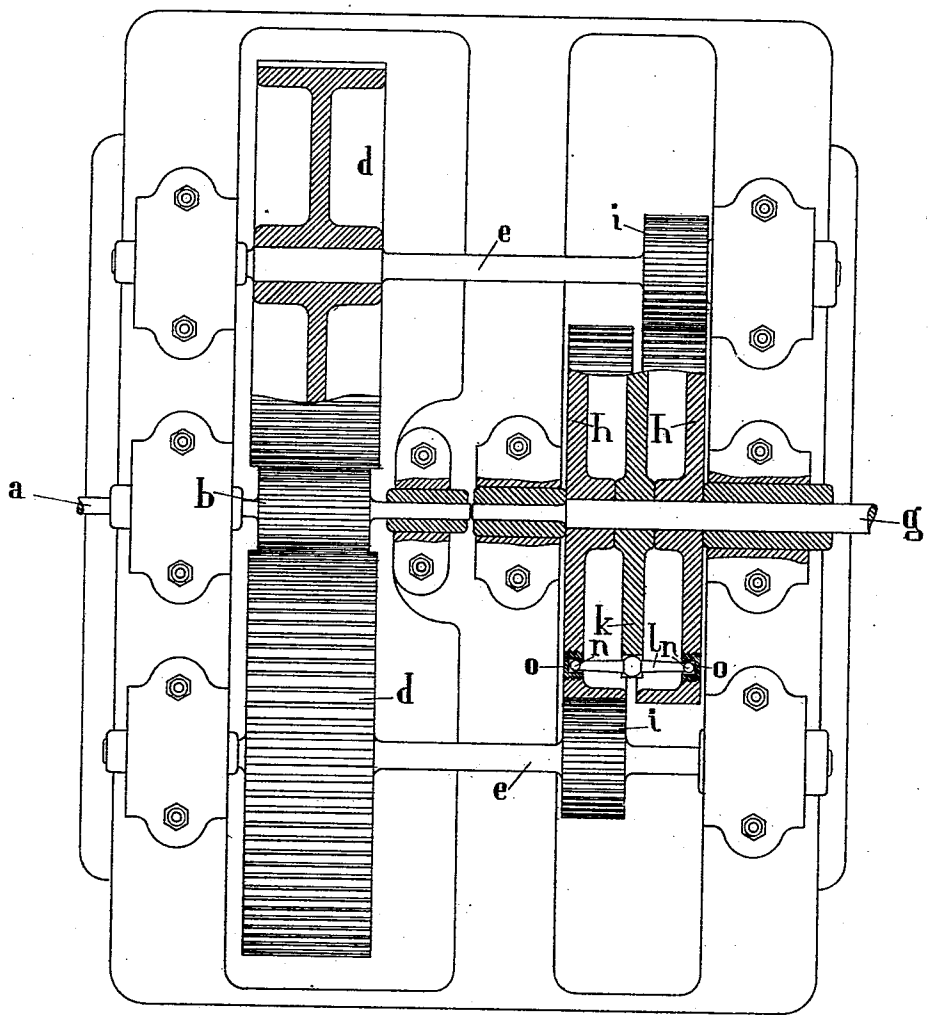

WITNESSES:
Charles Schroeder
William Duehm

INVENTOR
C. G. P. de Laval
by Gugel & Rueffer
ATTORNEYS.

ANDREW B. GRAHAM, PHOTO-LITHO. WASHINGTON, D.C.

UNITED STATES PATENT OFFICE.

CARL GUSTAF PATRIK DE LAVAL, OF STOCKHOLM, SWEDEN.

APPARATUS FOR STEADYING MOTION OF RAPIDLY-ROTATING SHAFTS.

SPECIFICATION forming part of Letters Patent No. 563,191, dated June 30, 1896.

Application filed September 2, 1892. Serial No. 444,852. (No model.) Patented in England February 20, 1892, No. 15,011; in Sweden February 20, 1892, No. 4,522; in Germany July 15, 1892, No. 72,612; in France August 19, 1892, No. 223,802; in Belgium August 19, 1892, No. 100,998; in Switzerland August 19, 1892, No. 5,805; in Norway August 19, 1892, No. 3,255, and in Spain October 3, 1892, No. 13,659.

To all whom it may concern:

Be it known that I, CARL GUSTAF PATRIK DE LAVAL, a citizen of Sweden, residing at Stockholm, Sweden, have invented certain new and useful Improvements in Apparatus for Steadying the Motion of Rapidly-Rotating Shafts, (for which I have obtained Letters Patent in Germany, No. 72,612, dated July 15, 1892; in Sweden, No. 4,522, dated February 20, 1892; in England, No. 15,011, dated February 20, 1892; in France, No. 223,802, dated August 19, 1892; in Belgium, No. 100,998, dated August 19, 1892; in Spain, No. 13,659, dated October 3, 1892; in Switzerland, No. 5,805, dated August 19, 1892, and in Norway, No. 3,255, dated August 19, 1892,) of which the following is a specification.

My invention relates to apparatus for steadying the motion of rapidly-rotating shafts, and its object is to entirely or to any desired extent neutralize or balance the pressure which by rapidly-rotating engines, such as a steam or gas motor, is produced on the journals of the pinion or wheel by means of which the motive power is transmitted from the main shaft to transmissions. The more powerful such an engine is, the greater is the force which, by each revolution of the shaft in question, has to be transferred to the transmissions. In such engines the pressure on the journals thus produced was so great that, in spite of plentiful lubrication and carefully-made bearings, the journals were liable to grip in the same. It has been found necessary, therefore, to partly or entirely relieve or neutralize this pressure on the journals. This is obtained in the present invention by placing two or more cog-wheels in gear with the shaft-pinion, thus transmitting the motive power to a corresponding number of parallel auxiliary shafts, each of which either drives a machine whose capacity to absorb power is regulated in such a manner that no pressure, or any desired amount of it, is produced on the journals of the main shaft; or, if it be desired to drive only one machine by the engine, the pressure is neutralized to the required extent by coupling said auxiliary shafts together by a special coupling, which regulates the resistance in the cog-wheels driven by the pinion.

In the accompanying drawings, Figure 1 is a transverse section, partly in elevation, of an apparatus in which the motive power is transmitted by several auxiliary shafts, which each drives its own machine. Fig. 2 is a plan view of the same, partly broken away. Fig. 3 is a transverse section, partly in elevation, of the last-named case, in which the motive power first is transmitted to several auxiliary shafts, which are in turn coupled to one intermediate shaft; and Fig. 4 is a plan view of the same, parts being broken away.

In Figs. 1 and 2, *a* indicates the main shaft of a rapidly-rotating engine or motor, for instance, a steam or gas turbine.

b is the pinion, by means of which the motive power has to be transmitted from the main shaft, and *c c* are the journals of pinion *b*. On each side of the pinion *b* there is a cog-wheel *d*, into both of which cog-wheels the pinion is geared and thus transmits the motion to the auxiliary shafts *e e* of the cog-wheels *d*, said shafts *e e* being parallel or counter to the main shaft. In the drawings only two such cog-wheels are shown, but, of course, three or still more cog-wheels may be placed around the pinion *b*.

The machines to be driven from the main shaft *a* are coupled to the auxiliary shafts *e e* either directly or by means of a suitable transmission. *f f* indicate such machines applied directly to the auxiliary shafts *e e*, which may be ventilators, pumps, dynamos, &c.

It is evident that the pinion can be made to be suspended by regulating, by suitable means, the amount of work consumed by these machines *f f*, or if, for some reason or other, it be desired to maintain a small amount of pressure in the journals *c c*, this pressure can be kept within any desired limits.

It has to be noted that the above machines *f f* may also be motors of some kind, and thus the main shaft *a* would be driven instead of the driving-shaft. In this case a slower rotary motion is transmitted into a quicker. The same result is obtained by means of the arrangement shown in Figs. 3 and 4. *a* is, as

before, the main shaft; *b*, the pinion for the transmission of the motive power; *c c*, the journals of the pinion; *d d*, the cog-wheels on each side of the pinion, and *e e* the auxiliary shafts of these cog-wheels. *g* is the intermediate shaft by means of which the auxiliary shafts *e e*, through gearing, are connected in such a manner that the said shaft *g* takes up the amount of work transmitted by the auxiliary shafts *e e*. On this shaft *g* are placed two loose dished cog-wheels *h h*, which gear into corresponding pinions *i i* on the auxiliary shafts *e e*. Between the two loose cog-wheels *h h* there are one or more arms *k*, or a disk fixed on the intermediate shaft *g*, which arm or arms *k* have forked ends which support a cross-bar or a balance-lever *l*, whose extremities enter into sockets *n n* in blocks *o o*, which are in the arms of the loose cog-wheel *h h*. The cross-bar *l* is provided both at the point, where it is supported by the arm *k*, and at the ends with spherical enlargements, so that it has a certain amount of play at the supported points. If several arms *k* are employed, then each of them supports a similar cross-bar or balance-lever *l*. If a disk is employed instead of arms *k*, then it is provided at the circumference with sockets or holes, in which the cross-bars *l* are inserted, in an evident manner. In this case it may be convenient to provide means for giving the mechanism a certain amount of elasticity in order to obtain a satisfactory coöperation between the different parts and smoother working.

If it be desired only to have that pressure on the journals *c c* which results from the horizontal support of the weight of the revolving body, then the cross-bar *l* is made equal-armed, that is to say, it is supported at its center by the arm *k*, as shown in the drawings. If, on the other hand, it be desired that there shall be a certain amount of pressure on the journals *c c*, then the cross-bar or balance-lever *l* has simply to be made in a corresponding way unequal-armed, instead of, as in the previous case, equal-armed.

In a similar way, as above remarked, the shaft *g* can of course be used as the driving-shaft and the shaft *a* as the driven shaft.

Having thus described my invention, I claim as new and desire to secure by Letters Patent—

1. The combination, with the main shaft of a gas or steam turbine, of a pinion on the main shaft, auxiliary shafts arranged parallel with and at opposite sides of the main shaft, cog-wheels on said auxiliary shafts gearing with said pinion, pinions on said auxiliary shafts, an intermediate shaft located between the auxiliary shafts, loose cog-wheels on the intermediate shaft gearing with the pinions of the auxiliary shafts, and a yielding coupling between the loose cog-wheels and the intermediate shaft, substantially as set forth.

2. The combination, with the main shaft of a gas or steam turbine, of a pinion on the main shaft, two cog-wheels gearing into this pinion, auxiliary shafts on which the cog-wheels are mounted, pinions on said auxiliary shafts, an intermediate shaft located between the auxiliary shafts and provided with loose cog-wheels gearing with the pinions of the auxiliary shafts, an arm on the intermediate shaft, placed between the cog-wheels and having a forked end and a cross-bar supported loosely in the forked end and engaging with the loose cog-wheels at its ends, substantially as set forth.

3. The combination, with the main shaft of a gas or steam turbine or other motor, of a pinion on said shaft, auxiliary shafts mounted parallel and at opposite sides of the main shaft, cog-wheels on said auxiliary shafts adapted to gear with said pinion, pinions on said auxiliary shafts, an intermediate shaft located between the auxiliary shafts and provided with loose cog-wheels gearing with the pinions of the auxiliary shafts, an arm keyed to said intermediate shaft and having a fork-shaped end, said arm being located between said loose cog-wheels, a cross-bar supported loosely in the forked end of said arm, and blocks supported by the loose cog-wheels and provided with sockets for receiving the ends of the cross-bar, substantially as set forth.

In testimony that I claim the foregoing as my invention I have signed my name in presence of two subscribing witnesses.

CARL GUSTAF PATRIK DE LAVAL.

Witnesses:
TYEKO ROBSAHM,
CARL WANLOO.