Sept. 6, 1960 M. D. ISSERLIS 2,951,648

MILLING APPARATUS

Filed June 27, 1955 2 Sheets-Sheet 1

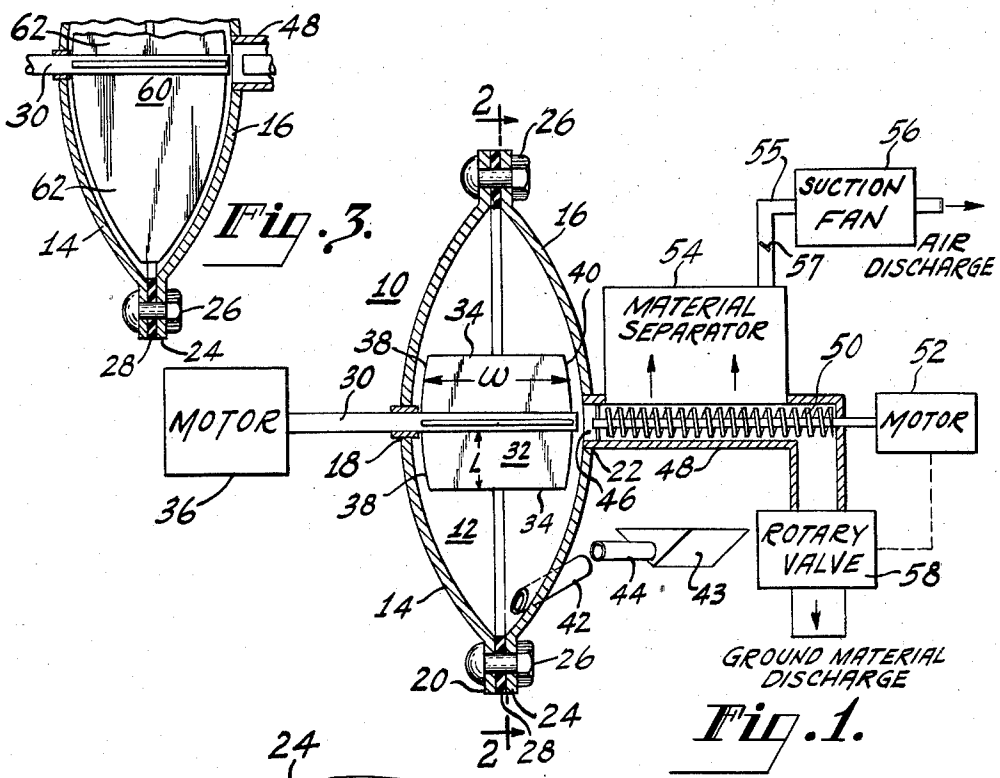

Fig. 3.

Fig. 1.

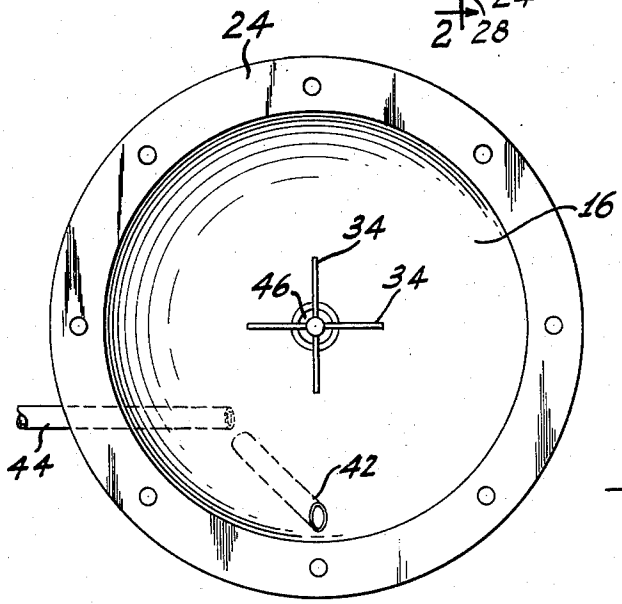

Fig. 2.

INVENTOR.
MORRIS D. ISSERLIS
BY
Robert A. Green
ATTORNEY

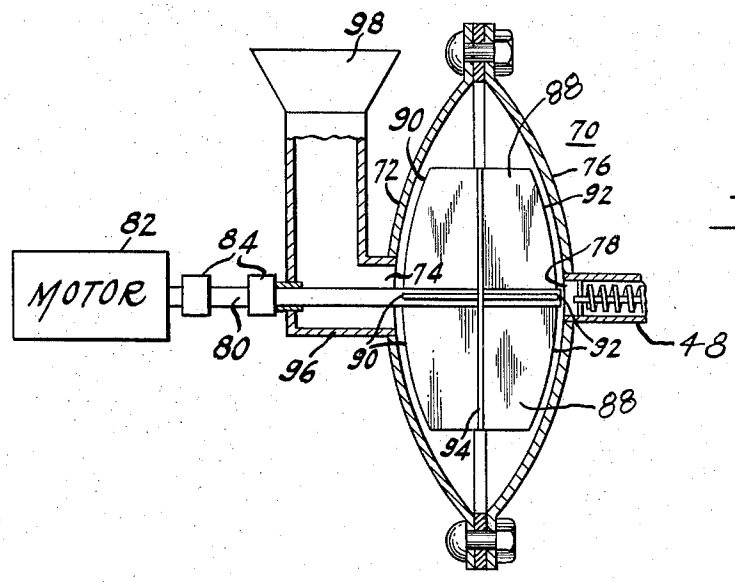

Fig. 4.

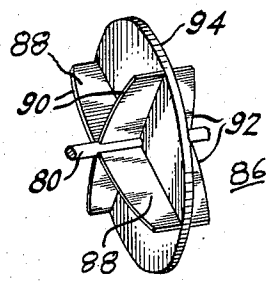

Fig. 5.

INVENTOR.
MORRIS D. ISSERLIS
BY Robert C. Green
ATTORNEY

United States Patent Office

2,951,648

Patented Sept. 6, 1960

1

2,951,648

MILLING APPARATUS

Morris D. Isserlis, 117 Riverview Ave., Highland Park, N.J.

Filed June 27, 1955, Ser. No. 518,138

8 Claims. (Cl. 241—55)

This invention relates to milling apparatus and, particularly, to centrifugal milling apparatus for pulverizing solid material to substantially any desired particle size.

This is a continuation-in-part of United States patent application Serial No. 503,915 filed April 26, 1955, now abandoned.

In one known type of milling machine, high velocity jets of a fluid are employed to pulverize solid materials to a fine state. In order to achieve the required fluid velocity, extremely high fluid pressures must be provided and comparatively complex and expensive auxiliary apparatus is required for this purpose. The cost of such auxiliary apparatus is prohibitive. In addition, other known types of milling apparatus do not readily provide milling to fine particle size and, concurrently, fine particle size classification.

Accordingly, the principles and objects of this invention are directed to providing milling apparatus of new and novel form capable of pulverizing solid materials to substantially any desired particle size and, at the same time, providing useful classification in the fine particle range. The objects of the invention are also concerned with providing an improved milling apparatus which is comparatively inexpensive while being comparatively simple and rugged in construction.

In general, the principles and objects of this invention are accomplished by the provision of milling apparatus including a stationary housing having a large volume at the center thereof and tapering to a minimum volume at the periphery thereof. Thus, the housing may comprise a pair of generally conical members or sections of spheres or the like coupled together at their bases. An impeller is provided at the center of the housing and having comparatively short blades so that the diameter of the impeller is smaller than the diameter of the housing along its long axis. Means are provided for introducing material to be pulverized at the periphery of the housing and for withdrawing the pulverized particles at the center of the housing.

In order to achieve the desired pulverizing operation, the impeller is rotated at high speed whereby the large volume of air at the center of the housing is rotated and its energy is transferred throughout the volume of the housing to the periphery thereof where a small volume of air is rotated at high speed. The frictional forces generated by the rapidly moving air mass, particularly at the periphery of the housing adjacent to the wall thereof, create extreme turbulence and eddy currents. Thus, the solid material introduced into the housing at the periphery is retained at the periphery due to centrifugal force and the eddy currents cause violent collisions of the particles so that they pulverize each other due to self-impact. A suction force applied at the outlet from the housing at the center thereof draws the fine particles out of the housing with the size of the particles removed being determined by the resultant of the flow of air into the housing through the inlet and out of the housing through the outlet and of the centrifugal

2

force generated by the rotating air mass. Thus, efficient classification is achieved.

If desired, the above-described machine may be employed as a hammer mill which provides particle classification by making the impeller blades of sufficient length that they can make direct physical contact with the material to be pulverized.

Milling apparatus embodying the principles of the invention may also include inlet and outlet pipes at the center of the housing and axially aligned. In this construction of a milling machine, the impeller which has its blades lying in planes which extend radially from the axis on which the inlet and outlet are aligned, is provided with a solid disk secured to the impeller approximately midway between the inlet and outlet and oriented in a plane transverse to the axis on which the inlet and outlet pipes are oriented. Thus, in effect, the direct flow path between the inlet and outlet pipes is blocked by the solid disk and the material introduced into the housing is forced to the periphery and cannot reach the outlet before it has been pulverized. In this way, the classifying action of the apparatus is improved.

The invention is described in greater detail by reference to the drawing wherein:

Fig. 1 is a sectional elevational view of milling apparatus embodying the principles of the invention and a schematic representation of auxiliary apparatus employed therewith;

Fig. 2 is a sectional view along the line 2—2 in Fig. 1;

Fig. 3 is a sectional elevational view of a portion of another embodiment of the invention;

Fig. 4 is a sectional elevational view of still another embodiment of the invention and auxiliary apparatus employed therewith; and

Fig. 5 is a perspective view of the impeller employed with the apparatus of Fig. 4.

Referring to the drawing and particularly to Figs. 1 and 2, milling apparatus embodying the principles of the invention includes a housing **12** comprising a pair of similar dished members **14** and **16** in the form of cones or sections of spheres or the like. The dished members are shown as sections of spheres. The dished member **14** has an apex or center **18** and a rim **20** and the dished member **16** has an apex or center **22** and a rim **24**. The dished members are secured together at their rims by means of bolts **26** or the like with a gasket **28** of rubber or the like interposed between the rims. The dished members, thus, are widely spaced at their centers of apices and the spacing between them decreases to a minimum at the region of contact between the rims **20** and **24**. Thus, as one important feature of the invention, the housing **12** encompasses a large volume at its center between the apices of the dished members and the volume decreases to a minimum at the periphery thereof. The dished members may be of cast iron, steel or the like.

A shaft **30** is suitably rotatably journalled in the wall of the dished member **14** and aligned with the centers **18** and **22** of the dished members **14** and **16**, respectively. The shaft extends into the interior of the housing **12**. Within the housing, the shaft **30** carries an impeller **32** including a plurality of vanes or blades **34** which lie in planes which extend radially from the shaft **30** as shown in Fig. 2. Outside the housing, the shaft **30** is coupled to a suitable motor drive apparatus **36** which may comprise a motor alone or a motor and belt coupling arrangement or the like.

The impeller blades **34** have edges **38** and **40** which, preferably, follow the contour of the inner walls of the housing and extend closely adjacent to said walls. Thus, the width "W" of the blades is as large as possible to provide maximum impeller capacity. The length "L"

of the impeller blades is such that the diameter of the impeller is smaller than the diameter of the housing at the rims of the dished members by such an amount that the impeller blades do not contact the material which is pulverized at the periphery of the housing. A favorable ratio of housing diameter to impeller diameter is of the order of two to one.

With the housing vertically disposed as shown in Fig. 1, an inlet pipe **42** is coupled to the periphery of the housing at the bottom thereof and secured to the wall of one of the dished members, for example the dished member **16**. The pipe **42** may be disposed at substantially any desired angle with respect to the housing and is open to the atmosphere to allow air to enter with the charge of material to be pulverized. A hopper **43** which carries the material to be fed into the housing is coupled by a pipe **44** to the inlet pipe **42**. The pipe **44** may contain apparatus for feeding material such as a screw conveyor or the like.

The dished member **16** is provided with an outlet opening **46** at the apex thereof which comprises an outlet for the pulverized material. Thus, the outlet of the milling apparatus **10** is positioned at the center of the housing **12**. An outlet pipe **48** is coupled directly to the outlet opening **46** and a screw conveyor driven by a motor **52** is disposed within the pipe **48**. A conventional material separator **54** which separates the air and the pulverized particles which fall into the screw conveyor **50** is coupled to the outlet pipe **48**, preferably, immediately adjacent to the outlet opening **46** in the housing **12** and a suction fan **56** is suitably coupled to the dust collector through an air line **55** controlled by a damper **57**. A rotary valve **58**, driven by the motor **52** and adapted to withdraw pulverized particles without disturbing the air flow in the outlet line, is coupled to the outlet pipe **48** and pulverized material is collected therefrom.

In operation of the milling apparatus **10**, the impeller **32** is first set into rotation at high speed, for example at about 20,000 feet per minute top speed. Thus, the air within the housing is set into rotation and large centrifugal forces are generated therein. Then, the suction fan **56** is turned on and the feeding of solid materials and air (or steam or the like) from the source **44** is begun. As the solid materials are fed into the housing, they are swept to the periphery thereof where they are pulverized due to self-impact. The theory of operation is that the impeller sets the large mass of air at the center of the housing into rotation at high speed and the rotational energy thus developed is transferred throughout the volume of the housing to the periphery thereof. At the periphery of the housing, the rapidly moving air generates large frictional forces which create extreme turbulence and eddy currents and the solid materials swirled about in these eddy currents are pulverized due to self-impact.

As the solid material is pulverized, the resulting particles which are of many different sizes tend to become classified according to size along the diameter of the housing with the finest particles oriented toward the center of the housing in the vicinity of the outlet pipe **48** and the larger particles retained near the periphery due to the centrifugal force of the rotating air. The particles thus classified which are too large to leave the housing also act as a grinding medium on the incoming material. The ground particles are withdrawn from the housing **12** by the air flowing through the housing from the inlet pipe **42** and out of the outlet opening **46**. The suction force applied to the system by the suction fan **56** under the control of the damper **57** determines the air flow through the system and through the housing and the resultant force of this air flow and the centrifugal force of the mass of rotating air determines the size of the particles withdrawn from the housing. If very fine particles are desired, the suction force is made small and the grinding time is thus made comparatively long and if larger particles are desired, the suction force is increased and the grinding time is thereby reduced.

In operation of the milling apparatus **10**, the impeller **32** may be rotated in a counterclockwise direction as viewed in Fig. 2 such that the flow of air rotated thereby is opposed to the flow of solid material and air entering the housing through the inlet pipe **42**. This arrangement provides increased turbulence at the point of entry of solid material and promotes the attrition thereof. In addition, if the feeding of solid material into the housing is discontinued, the counterclockwise rotation of the air within the housing may be employed to clean out the housing by driving the contents thereof out through the inlet pipe. Alternatively, the rotation of the impeller may be in a clockwise direction and in the same direction, substantially, as the flow of air and solid materials into the housing through the inlet pipe.

As described above, the classification of the milling apparatus **10** depends on the centrifugal force within the housing and the flow of air therethrough. In addition, classification is effected by the reduction in velocity of the air which enters the housing at comparatively small volume and expands at the center of the housing to a larger volume.

Effective pulverizing is promoted in the milling apparatus of the invention by the considerable energy input to the system in the large mass of air rotated at high speed at the center of the housing. In addition, since the grinding action is performed by particles of solid material colliding with each other and not with portions of the apparatus, there is substantially no wear on the component parts thereof.

The apparatus described herein may be employed to pulverize many different types of materials, for example, pigments, abrasive dusts, ceramics, waxy materials and the like.

Another embodiment of the invention shown in Fig. 3 employs all of the features of the apparatus shown in Fig. 1 except that an impeller **60** is employed which has blades **62** which extend close to the periphery of the housing. Thus, the material to be pulverized which is retained at the periphery by centrifugal force is pulverized by direct impact with the blades **62** of the impeller and the flow of air through the housing as described above provides classification and removal of the particles of the desired size. The tips of the blades comprise, or are coated with, a wear-resistant material such as Stellite which is an alloy of cobalt, chromium, tungsten, carbon, and silicon.

Referring to Fig. 4, a modification of the invention includes a housing **70** of the general form described above and comprising a dished member **72** having an opening **74** at its center and a dished member **76** having an opening **78** at its center. The dished members **72** and **76** are secured together at their peripheries with their concavities opposed and with the center openings **74** and **78** aligned. Thus, the dished members are widely spaced at their centers and the spacing between them decreases toward the periphery of the housing.

A shaft **80** having one end connected to a motor extends through the opening **74** in the dished member **72** into the housing interior. The shaft **80** is in axial alignment with the two center openings **74** and **78**. The shaft **80** has a smaller diameter than the opening **72** and is suitably supported, for example in bearing blocks **84**, positioned outside the housing **70** suitably supporting themselves in any convenient manner. A protective sleeve or the like (not shown) may be provided over the shaft in the vicinity of the opening **74**. Within the housing, the shaft carries an impeller **86** of the general type described above. The impeller includes a plurality of blades **88**, for example four blades, which, in effect, lie in planes substantially perpendicular to the

shaft **80**. Edges **90** and **92** of the impeller blades follow the contour of the housing along their length. The impeller blades are preferably substantially as wide as the distance between the walls of the housing along their entire length so that only the minimum clearance is present between the edges of the blades and the walls of the housing. The close spacing of the blades to the housing walls is designed to promote the building up of pressure between the blade edge and the wall so that pulverized material is substantially prevented from flowing therebetween. The impeller blades may be of any desired length depending on whether or not it is desired to make direct contact with the material being pulverized.

According to the invention, a metallic disk or plate **94** is secured to the impeller. The disk is disposed substantially midway between the edges **90** and **92** of the impeller blades **88** and along the long axis of the housing substantially perpendicular to the shaft **80**. The disk diameter is not critical and may be equal to, slightly smaller than, or slightly larger than the diameter of the impeller. Thus, the disk, in effect, blocks the direct flow path between the central openings **74** and **78** in the dished members **72** and **76**. Disk **94** is seen in Fig. 5.

In addition, in this embodiment of the invention, material is to be pulverized is fed into the housing at the center thereof and through the central opening **74** in the member **72**. To this end a pipe **96** is secured to the opening **74** surrounding the shaft **80** and is coupled to a hopper **98** or some other suitable reservoir of material to be fed to the housing to be pulverized. The outlet system employed with the apparatus shown in Fig. 4 may be the same as that shown in the apparatus of Fig. 1 with the outlet pipe **48** coupled to the central opening **78** in the dished member **76**.

One advantage of the apparatus shown in Fig. 4 derives from the fact that the material inlet is at the center of the housing where there is substantially no pressure and substantially no energy is expended in feeding material into the housing. Another advantage arises from the presence of the disk **94** on the impeller which promotes the classifying action of the apparatus. Classification is improved because when material is fed into the housing even the finest particles therein cannot flow directly into the outlet pipe **48** due to the presence of the disk. Thus, as the material is fed in, some of it strikes the disk as it flows to the periphery of the housing due to the centrifugal force generated by the impeller. During the movement to the periphery of the housing, the material is struck by the blades and pulverizing is begun. When the material is properly pulverized and it is drawn out of the housing by the applied suction force and by the flow of air therethrough, it passes upwardly between the impeller blades which strike the material and provide an additional pulverizing action. The outgoing material is directed through the blades and is prevented from passing between the edges of the blades and the wall of the housing due to pressure generated in that area by the rotating impeller.

What is claimed is:

1. Milling apparatus which operates by means of air turbulence comprising a stationary housing consisting of two walls widely spaced at their centers and becoming gradually more closely spaced up to their peripheries where they are secured together, an impeller shaft at the center of said housing and extending between said walls, and a plurality of impeller blades secured to said shaft, said impeller blades being adapted to be rotated at high speed so that material being milled is retained at the periphery of said housing in a region of considerable air turbulence in which the material in effect mills itself, said blades having a width substantially equal to the width of said housing, the edges of said blades adjacent to said walls following the contour of said walls, the length of said blades being smaller than the radius of said housing so that said blades are remote from the periphery of the housing where material is milled and said blades are substantially out of direct contact with the material being milled.

2. Milling apparatus comprising a stationary housing consisting of two generally concave members positioned with their centers aligned and widely spaced at their centers and in contact with each other at their peripheries, an impeller shaft at the center of said housing, impeller blades secured to said shaft, said blades being substantially as wide as said housing and having their edges following the contour of the walls of said housing, the length of said blades being smaller than the radius of said housing so that said blades are remote from the periphery of the housing where material is milled and said blades are substantially out of direct contact with the material being milled, and a disk secured at its center to said shaft and lying in a plane perpendicular to said shaft substantially midway between the centers of said walls.

3. The apparatus defined in claim 2 and including a inlet opening at the center of one of said walls and an outlet opening at the center of the other of said walls.

4. Milling apparatus which operates by means of air turbulence comprising a stationary housing consisting of two generally dish-shaped members oriented with concave surfaces facing each other and having their peripheries secured together, an impeller within said housing having an impeller shaft oriented transversely between the centers of said dish-shaped members, said impeller having at least two sets of impeller blades, and a disk secured to said impeller shaft and lying in a plane perpendicular to said shaft, said disk having a diameter substantially equal to the diameter of said impeller, the diameter of said impeller being of the order of half the diameter of said housing so that said blades are remote from the periphery of the housing where material is milled and said blades are substantially out of direct contact with the material being milled.

5. Milling apparatus comprising a stationary housing consisting of two generally spherical wall members positioned with their concave surfaces facing each other and with their peripheries secured together, an impeller within said housing and having an impeller shaft oriented transversely between the centers of said walls, the ratio of the diameter of said housing to the diameter of said impeller being of the order of two to one, and a solid disk secured to said impeller shaft and oriented in a plane perpendicular to said impeller shaft, the plane in which said disk lies being approximately midway between the edges of said impeller blades.

6. Milling apparatus which operates by means of air turbulence comprising a stationary housing consisting of a pair of walls having centers and spaced apart with their centers aligned, material inlet means at the center of one wall and material outlet means at the center of the other wall, an impeller shaft at the center of said housing, impeller blades secured to said shaft, said blades being substantially as wide as said housing and having their edges following the contour of the walls of said housing, the length of said blades being smaller than the radius of said housing, so that the tips of the blades are remote from the material being ground at the periphery of the housing, and a disk secured at its center to said shaft and lying in a plane perpendicular to said shaft and substantially midway between the centers of said walls, said impeller blades being adapted for rotation at high speeds to cause air turbulence at the periphery of said housing.

7. The apparatus defined in claim 6 and including a suction fan coupled to said material outlet means for selectively withdrawing ground material from said housing, the speed of said fan being variable to provide a classifying action on the material withdrawn.

8. Milling apparatus comprising a stationary housing consisting of two generally spherical wall members positioned with their concave surfaces facing each other and

with their peripheries secured together, an impeller within said housing and having an impeller shaft oriented transversely between the centers of said walls, the ratio of the diameter of said housing to the diameter of said impeller being of the order of two to one, and a solid disk secured to said impeller shaft and oriented in a plane perpendicular to said impeller shaft.

References Cited in the file of this patent

UNITED STATES PATENTS

427,228	Finney	May 6, 1890
617,345	Mitchell	Jan. 10, 1899
669,897	Day	Mar. 12, 1901
1,656,862	Loy	Jan. 17, 1928
1,753,936	Moore	Apr. 8, 1930
1,806,494	O'Brien	May 19, 1931
2,314,251	Smith	Mar. 16, 1943
2,361,278	Evans	Oct. 24, 1944
2,429,978	Blanchard	Nov. 4, 1947
2,474,314	Koehne	June 28, 1949
2,552,603	Tanner	May 15, 1951
2,573,129	Dulait	Oct. 30, 1951
2,591,141	Dulait	Apr. 1, 1952
2,712,416	Beuschausen	July 5, 1955
2,750,120	Pallmann	June 12, 1956
2,830,771	Pallmann	Apr. 15, 1958

FOREIGN PATENTS

9,555	Great Britain	July 25, 1907
671,941	Great Britain	May 14, 1952
910,378	France	Jan. 28, 1946