March 22, 1966 W. W. SWEET ET AL 3,241,208

APPARATUS FOR PRESSING DETERGENT BARS AND CAKES

Filed Dec. 22, 1960 2 Sheets-Sheet 1

Fig. 1

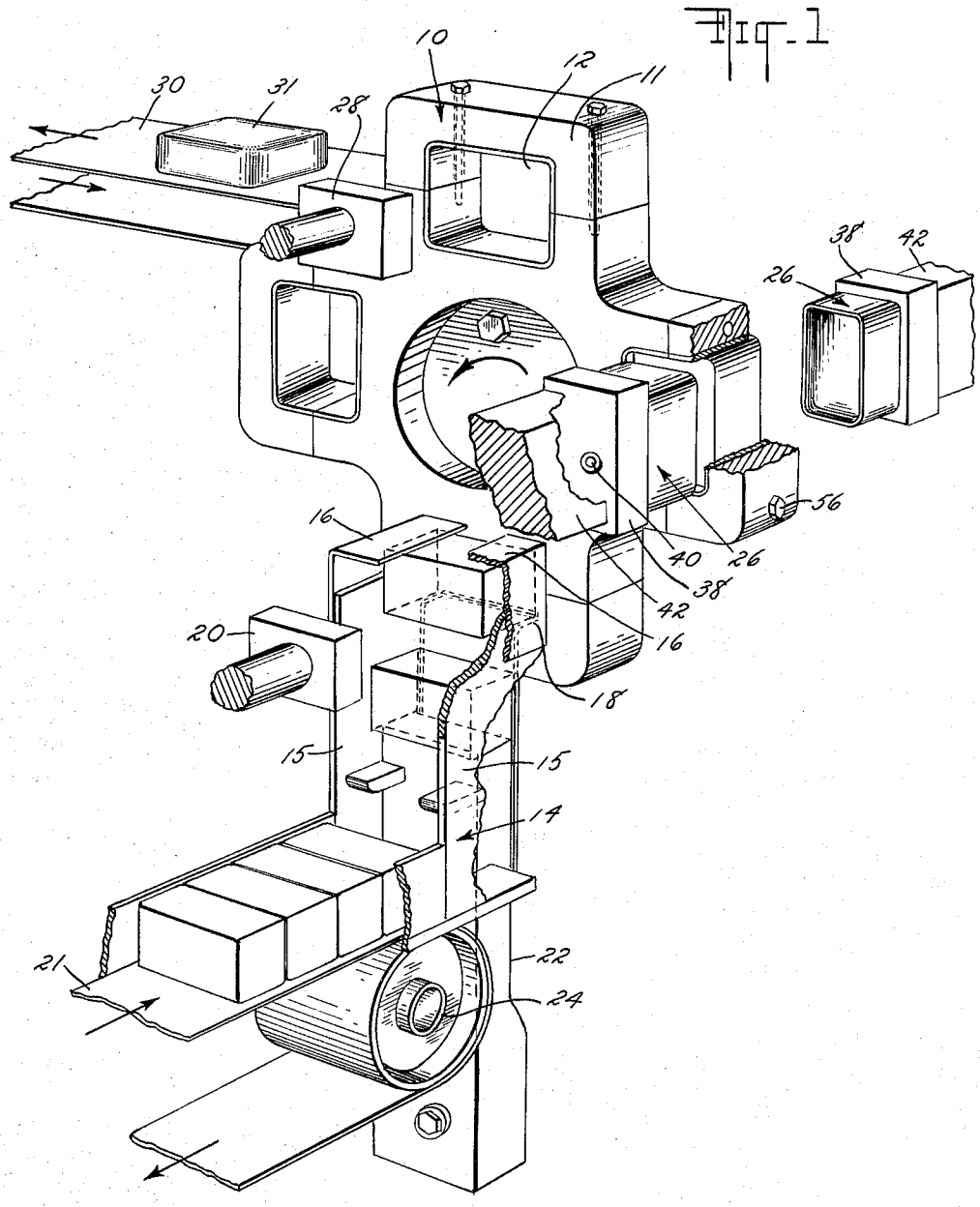

INVENTORS
WARREN WILLIAM SWEET
CHARLES FREDERICK FISCHER
BY
Raymond F. Kramer
ATTORNEY

March 22, 1966 W. W. SWEET ET AL 3,241,208

APPARATUS FOR PRESSING DETERGENT BARS AND CAKES

Filed Dec. 22, 1960 2 Sheets-Sheet 2

FIG. 2

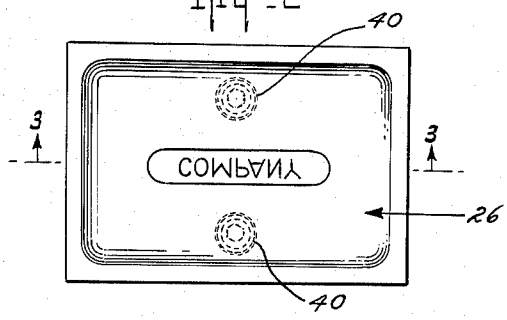

FIG. 6

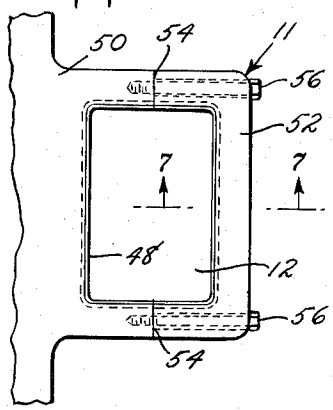

FIG. 3

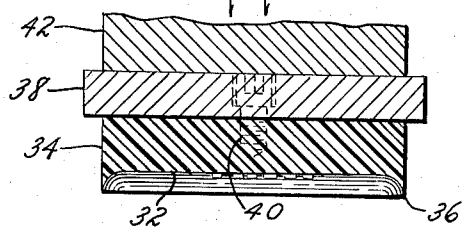

FIG. 7

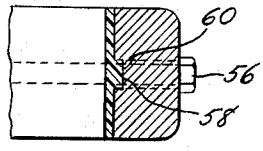

FIG. 4

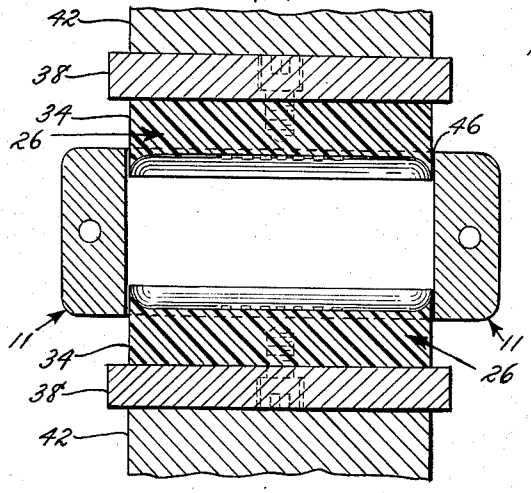

FIG. 5

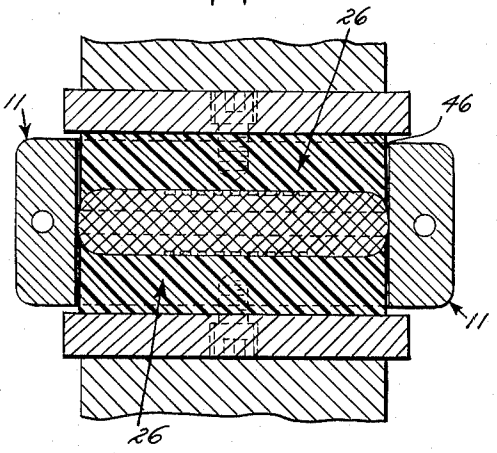

INVENTORS
WARREN WILLIAM SWEET
CHARLES FREDERICK FISCHER
BY
Raymond F. Kramer
ATTORNEY

United States Patent Office 3,241,208 Patented Mar. 22, 1966

3,241,208

APPARATUS FOR PRESSING DETERGENT BARS AND CAKES

Warren William Sweet, Pompton Plains, and Charles Frederick Fischer, Jersey City, N.J., assignors to Colgate-Palmolive Company, New York, N.Y., a corporation of Delaware

Filed Dec. 22, 1960, Ser. No. 77,682
4 Claims. (Cl. 25—7)

This application is a continuation-in-part of application Serial No. 765,712, filed October 2, 1958, which in turn is a continuation-in-part of application Serial No. 288,022, filed May 15, 1952.

The present invention relates to an apparatus and process for pressing detergent materials into the forms of bars and cakes and has particular reference to die members and die boxes, formed partially or wholly of plastic materials.

One form of apparatus which has been used for pressing detergent materials into the forms of bars and cakes comprises a die set, including a pair of companion die members and a die box, mounted in operative relationship on a stamping or pressing machine.

The die sets of such apparatus have been wholly formed of various kinds of metals and alloys, e.g., steel, iron, copper, aluminum, bronze, Monel metal, etc. Dies and die boxes made of these metals, although widely used in the detergent industry, have certain inherent limitations, disadvantages and drawbacks which limit their usefulness and desirability for commercial detergent pressing operations.

The construction of metal die members, for example, necessitates painstaking and time consuming hand shaping and machining operations. When a metal die member wears out or is broken it is difficult to replace it with an exact duplicate replacement die since the replacement die must also be shaped individually by hand, molded metal dies not having been found practicable. Another disadvantage inherent in die sets made of shaped or machined metals is the fact that, because the shape of the die member does not conform exactly with the die box walls, a certain amount of detergent material escapes from between the working faces of the die members during pressing and flows into the clearance space between the dies and the interior walls of the die box, producing a so-called fin or flash. In time some of the detergent flash builds up on the faces of the dies and mars the surfaces of subsequently pressed cakes. The cleaning of the dies and the die box to remove this fin or flash necessitates shutting down the apparatus, which results in increased labor and production costs and, if cakes of soap or detergent had been produced by the dies upon which flashing was deposited, that production would have to be scrapped. Had the manufacture of this marred product not been noticed, and the soap been shipped, bars put on sale would be unsightly to the consumer and would probably create an unfavorable impression about the quality of the detergent itself. This might very well lead to a loss of customers for the product, as well as damage to the manufacturer's valuable reputation for selling only products of the highest quality.

Difficulties similar to those described in the preceding paragraph are also encountered when the detergent or soap being pressed is attracted to the material of the die and a portion adheres to the die during pressing. This behavior is not usually as frequent or as detrimental as the deposition of flashing on the die. It occurs most often when the die has a rough or figured working surface and when the material being pressed is soft and lacks cohesion. It has been observed that metal has an affinity for detergents (including soaps), sometimes causing severe die-marking when detergent adheres to it.

It has been discovered that the disadvantages and limitations heretofore encountered in pressing detergent materials with metal die sets may be overcome or substantially minimized by pressing the detergent in a die set formed of organic plastic materials. This improvement is especially notable when the dies are used to press softer, tackier detergents, which tend to adhere to metal dies. The novel plastic die members of this invention are rugged and long wearing and may be mounted quickly for operation in conventional pressing machines. They are rigid, comparable to stainless steel, Monel metal or brass, in this respect, closely molded to fit the die boxes so that no objectionable flashing of detergent occurs during the pressing operation. This absence of flashing is apparently due to the resistance of the detergent to flowing through the very small openings present at the pressure employed and during the short time, usually a split second, in which the detergent is shaped.

In U.S. Patent No. 2,965,946, of which this application is a continuation-in-part, various plastics were suggested for soap and detergent pressing die materials. Particularly desirable were those plastics which were flexible enough to expand to the inner walls of the die box during pressing, thereby preventing flashing of detergent. Such materials are very useful in allowing the easy, economical pressing of soap and detergent bars at high speeds without die markings and excessive flashings. Yet, in presses which malfunction to cause the placement of more than one blank of detergent in the die box, the more flexible and resilient dies may be prematurely expanded, causing breakage or a permanent distortion when forced against the front of the die box during pressing. When metal dies are employed, double blanks merely result in overweight double cakes, the dies being sufficiently rigid to prevent expansion of the edges and resultant contact with the die box, despite the spreading force due to the presence of the extra blank of detergent. Now it has been found that certain plastic dies can be made with qualities like those of metal dies, so that the dies may be made of substantially the size of the die box, with only a minimal clearance allowed, and will not expand during pressing of the detergent. Such dies are known as epoxies or epoxy resins. They are hard and press detergent cakes of excellent surface smoothness. They are tough and can be employed continuously in pressing soaps for six months and more without replacement or dressing being needed. They are non-adherent to soaps and anionic synthetic detergents despite their accepted use as tenacious adhesives; thus, there is no serious problem of die marking due to sticking of detergent on the die faces. Agents to promote release of the pressed detergent need not be used in as great amount as is necessary with metal dies. The epoxies are inert and do not interact with pressing solution, thus do not form compounds which detrimentally affect the pressed detergent. Furthermore, they have unusually desirable molding characteristics which allow the production of dies in the true shape of the molds employed, without objectionable shrinkage or distortion. They are thermosetting, therefore little affected in their physical properties by normal changes in temperature. By the use of different types and different proportions of reactants and hardeners or curing agents, a fairly broad range of properties is obtainable in the finished dies. Such alterations of properties can also result from utilization of different fillers and plasticizers and variations of the amounts thereof.

Epoxy resins may be made from a variety of epoxy-containing materials, aromatic or aliphatic hydroxyl containing compounds and curing agents. Several different types are commercially available, some of which will be described below.

The most important currently used epoxy resins are those derived from epichlorhydrin and bisphenol A. These are reacted in the presence of caustic to produce the diglycidyl ether of bisphenol A, it usually being desirable to use an excess of epichlorhydrin to obtain high yields of monomer. The monomer can be polymerized by caustic or a dehydrohalogenating compound to form resins of greater chain length and higher viscosities. Higher molecular weight resins are of higher softening points and also of higher epoxide equivalents. Other methods of producing these resins may also be employed and other reactants will also result in useful epoxies. Thus, monoglycidyl ethers may be made, in which there is a second reactive point such as an olefinic bond, e.g., allyl glycidyl mixed diether of bisphenol A. Instead of epichlorhydrin, dichlorhydrin, 1,2-dichloro-3 hydroxy propane, butadiene dioxide or diglycidyl ether may be used to supply the epoxy radical. Instead of bisphenol A, other polynuclear polyhydroxy phenols may be substituted, e.g., bisphenol F, 4,4′ dihydroxy diphenyl, trihydroxyl diphenyl dimethyl methane, dihydroxyl diphenyl sulfone, Novolac resins and long chain bisphenols. Polyalcohols, such as ethylene glycol, glycerol, erythritol and 2,3-butanediol are useful, as are mononuclear di- and trihydroxy phenols such as resorcinol, hydroquinone, pyrocatechol, saligenin and phloroglucinol. The most important of the resins, other than diglycidyl ether of bisphenol A are the glycidyl ethers of glycerol, glycidyl ethers of bisphenol F, epoxylated Novolacs and glycidyl ethers of long-chain bisphenol. Mixtures of such resins may be made and the epoxies may be compounded with other plastics to obtain special effects.

Epoxy resins are produced by many manufacturers and are usually sold by trade name, together with physical specifications. Among the better known epoxies are Araldite (Ciba); Bakelite (Union Carbide); Cardolite (Irvington Chemical Division of Minnesota Mining and Mfg. Co.); Epiphen (Borden); Epi-Rez (Devoe-Raynolds); Epon (Shell); Epotuf (Reichhold); Tygofil, Tygoweld (U.S. Stoneware); and Epoxylite (Epoxylite Corp.); others include Airtemp, Codco, Cellobond, Cepox, Cordopreg, Corrocote, Devcon, Ecco, Epocast, Epolac, Epolite, Helix, Hysol, Marblette, Nureco, Polykast, Polytool, Ren, Rezolin, Stycast, Tylene, Fiberite, Eccomold, and Tybon 5621–6, also FMC's Oxiron and Borden's Epoxide–201.

Resin viscosities usually are within the range from 150 to 100,000 centipoises or higher, as measured at 25° C. Solid resins are dissolved in butyl carbitol (40% solution). Epoxide equivalents are generally from about 140 to as high as 4,000. The average molecular weight of the most useful commercial resins is from 300 to 4,000. Their softening points usually lie between 8° C. or lower and 150° C.

The epoxy resins are further polymerized and cross linked during curing into thermoset compounds by means of hardening agents. Such hardening agents catalyze polymerization and sometimes form linking parts of the polymer. Epoxy-epoxy polymerization is promoted by tertiary amines as well as available ions and active hydrogens. Hydroxyl polymerization is catalyzed by acids, bases and amines, primary, secondary and tertiary. Crosslinking agents include polyfunctional primary and secondary amines, organic acids and anhydrides.

Among the useful tertiary amines are triethylamine, benzyldimethylamine, alpha-methylbenzyl dimethylamine, DMP–10 and DMP–30. Tertiary amine salts, such as the triacetates, tribenzoates and the tri-2-ethyl hexoate of DMP–30 increase resin pot lives. The primary aliphatic amines include diethylene triamine and diethylamino propylamine. Modified amines, including amides, metaphenylene diamine, amine glycidyl adducts and boron trifluoride complexes are also used. Among the useful cyclic amines piperidine and its derivatives are representative. The organic acid curing agents are usually carboxylic acids. A preferred anhydride is phthalic anhydride.

The proportion of curing agent employed generally determines the physical properties of the thermosetting epoxy. As a rule the reactants should be about in that proportion which results in one epoxy per active hydrogen of the curing agent. Variations from this proportion should not be greater than 20%. With catalyzed reactions the proportion of catalyst should be regulated to secure the desired properties. Sometimes such properties may also be controlled by incorporation of fillers, such as silica, asbestos, glass or wood flour.

The typical finished epoxy, cast or molded into a soap pressing die, has an impact strength of about 0.2 to 1 ft. lb. per inch of notch by American Society for Testing Materials test D–256. Its compressive strength is from 1.3 to 2.8 x 10^4 lbs./sq. in. (ASTM, D–695). Rockwell hardness is M–80 to M–120 (ASTM, D–785). It has a modulus of elasticity in tension of 13.5 x 10^5 lbs./sq. in. (ASTM, D–638) for an unfilled molded epoxy, a flexural strength (ASTM, D–290) of 8,000 to 21,000 lbs./sq. in. and a specific gravity (ASTM, D–792) of 1.1 to 2.0. Such an epoxy can indefinitely resist maximum temperatures of 250° F. to 600° F. and has a heat distortion temperature (ASTM, D–648) of 100° F. to 550° F.

Examples of epoxy resins suitable for detergent pressing dies include that made from 100 parts Epon 828 epoxy resin of average molecular weight of 350 to 400 and 10 parts diethylene triamine curing agent, cast and cured for 8 hours at room temperature. Another good hard die can be made from 100 parts of epoxy resin of epoxide equivalent of 0.20 and 17.8 parts pyromellitic dianhydride, cured for 10 minutes at 190° C. Also suitable is a die set made from 92 parts of Union Carbide's Epoxide 201 epoxy resin (3,4-epoxy-6-methyl cyclohexylmethyl-3,4-epoxy - 6 - methylcyclohexane carboxylate), cured 6 hours at 320° F. Die materials successfully tested include that made from 100 parts epoxy resin SW 404 (made by CIBA of Switzerland) and 9 parts S 404 hardener cured for 8 hours at room temperature. Less satisfactory, but acceptable, is that resulting from reacting 100 parts of Bakelite (England) R19019 resin with 19 to 24 parts Q 18814 hardener and curing at room temperature. The die resulting is clear amber and has a flexural strength of 17,000 lbs./sq. in., modulus of elasticity of 3.6 x 10^5 lbs./sq. in., compressive strength of 13,500 lbs./sq. in. and a heat distortion point of 50° C.

The above described materials have been found to be unexpectedly useful as detergent pressing dies. They successfully withstand the repeated shocks of pressing, readily release the pressed soap and can be easily produced by molding or casting to such accuracy that they will closely fit the die box and prevent objectionable flashing, even though the die is of the order of inflexibility of steel. If desired the die box itself or a liner fitted to it may be made of epoxy resin or other suitable nongalling plastic, e.g., polyethylene, Micarta, polypropylene, nylon or other suitable high organic polymer.

In order to indicate more fully the operations of the novel detergent pressing appartus, reference is made to the following description taken in conjunction with the accompanying drawings which, by way of illustration, show a preferred embodiment of the invention. Other embodiments of the invention employing the same or equivalent principles may be used and structural changes may be made as desired without departing from the present invention and going outside the purview of the appended claims. In the drawings similar reference characters are used to designate corresponding parts in each of the several figures.

In the drawing:

FIG. 1 is a perspective view, with parts broken away for greater clarity, of apparatus embodying features of the invention;

FIG. 2 is a front view of a plastic die member;

FIG. 3 is a sectional view of the die member shown in FIG. 2, along line 3—3, looking in the direction of the arrows;

FIG. 4 is a sectional view of a novel plastic die set, including a pair of plastic die members and a die box, showing the relative position of the parts before the die members are brought towards one another during the pressing stroke;

FIG. 5 is a sectional view similar to FIG. 4 showing the relative position of the parts and a pressed detergent cake upon completion of the pressing stroke;

FIG. 6 is a fragmentary view of a die box spider showing a die box, a receiving cavity and a plastic liner and

FIG. 7 is an enlarged fragmentary sectional view of the die box and liner shown in FIG. 6, along line 7—7, looking in the direction of the arrows.

Referring to the drawings, the invention as therein illustrated, is embodied in apparatus including die members of epoxy resin plastic materials designed for pressing detergent bars of rounded rectangular shape. Other bar shapes may be pressed by die sets of corresponding design.

Looking first at FIG. 1, apparatus for pressing detergent material into the forms of bars and cakes is depicted. The reference character **10** designates a die box spider which is cruciform in shape and which is adapted to rotate counter clockwise (as shown on the drawing) about an axis perpendicular to lines through the middle of each pair of opposite arms of the spider and at the point of intersection. There is a die box **11**, having a rectangular receiving cavity **12** located in each arm, the direction of the cavity being parallel to the axis of rotation of the spider. Means (not shown in the figure) are provided for rotating the spider through 360° in 90° increments.

A guide box **14**, having lateral walls **15** spaced apart by a distance approximately equal to the length of a receiving cavity, is located adjacent the spider. The upper part of the guide box is closed off by a pair of stops **16**. A shoulder **18** is located at a distance below said stops approximately equal to the width of a receiving cavity. The stops, shoulder and lateral walls of the guide box together form a port of approximately the same cross section as a receiving cavity. The port is extended a short distance from the guide box in the direction of the spider. The guide box is so located that said port is in horizontal alignment with each receiving cavity successively as the cavities are rotated into the lowermost position of the spider after each 90° rotation of said spider. A horizontally reciprocating bottom pusher **20** is positioned in alignment with said port and is adapted for reciprocable motion in and out of the guide box.

A vertical pusher **22**, adapted to reciprocate vertically in the guide box, is provided. A conveyor fade belt **21** mounted upon rollers **24**, one of which (not shown) is driven by positive means, has its forward end positioned in the guide box **14**. Pusher **22** is adapted to reciprocate from a position below the forward end of the conveyor belt, to a position in alignment with the shoulder.

Adjacent the spider and at a position 90° forward from the lowermost point thereof there is a pair of cured epoxy resin companion plastic die members **26** of approximately the same cross section adapted for horizontal reciprocation into each of the cavities **12** successively upon registry of the spider.

A horizontal reciprocating top pusher **28** is located adjacent the spider in horizontal alignment with a receiving cavity at the uppermost position of the spider. Pusher **28** is adapted to reciprocate through each of said cavities successively upon registry of the spider. A take-off belt **30** is located below the uppermost cavity on the side of the spider opposite the top pusher and conveys pressed detergent cakes **31** (one shown) to a wrapping station or the like.

Looking next at FIGS. 2 and 3, an epoxy resin plastic die member **26** is shown in the form of a block having a body portion provided with a depressed working surface or face **32**. The peripheral portion of the depressed face curves outwardly and joins side walls **34** of the block to terminate in a hard thin edge **36**. If desired, trademarks, trade names and the like may be embossed on or engraved in working face **32** for marking the pressed bar.

The die member **26** is secured to a mounting plate **38** in any convenient manner as by machine screws **40**. The plate **38** is secured to a shaft **42** attached to a detergent press. Sometimes it may be desirable to mold or cast the plastic material about an insert which is readily fastenable to the detergent press to hold the die in correct position.

Looking next at FIGS. 4 and 5, there is shown a plastic die set comprising a die box **11** and a pair of relatively movable hard epoxy resin die members **26**. As illustrated in the drawing the die box is made only very slightly larger in size than the die member to provide a clearance space **46** (usually from 0.0005 to 0.002 inch) which allows for passage of the die members in and out of the box, while still preventing flashing. The size to the clearance space has been exaggerated in the drawing for purposes of clarity of description.

In FIG. 4 the die members are shown in the position in which they appear near the beginning of the pressing stroke. FIGURE 5 shows the position of the die members at the end of the pressing stroke.

Looking next at FIGS. 6 and 7, a die box **11** having a liner **48** of the same epoxy resin as the dies or of other suitable non-galling plastic, is shown in a receiving cavity **12**. Die box **11** comprises two portions **50** and **52** joined to one another at **54** and held by any convenient means, e.g., by machine screws **56**. As shown more clearly in FIG. 7, that surface of die box **11** which defines cavity **12** is provided with a groove or notch **58**, i.e., the notch extends about the perimeter of cavity **12** in box **11**. The outer surface of plastic liner **48** is provided with an integrally formed perimetrically extending ridge **60**. To assemble the parts it is only necessary to remove portion **52** from portion **50** of the die box, insert liner **48**, replace die box portion **52**, and insert and tighten screws **56**. Ridge **60** of liner **48** fits securely within notch **58** and maintains the liner in fixed position.

Each of the companion die members **26** is preferably substantially wholly formed of hard thermoset epoxy resin plastic although only the working surfaces thereof, those contacting the detergent to be pressed, are most desirably of such material. Within the broader area of this invention are contemplated detergent pressing apparatuses in which the die members are of metal alloy or other hard base material covered with a layer or coating of plastic of suitable thickness.

The operation of the detergent pressing apparatus of this invention is simple and now will be described with respect to the die pressing of a milled detergent blank, such as either soap alone or a combination soap-synthetic detergent bar comprising mixed sodium soaps of higher fatty acids and monoglyceride sulfate anionic synthetic organic detergent. The apparatus employed in the pressing operation to be described includes a liner for the die box cavity and a pair of companion plastic die members, each made of hard epoxy resin thermoset plastic, such as CIBA's SW 404. It will be understood that the description also applies to apparatuses and processes using other suitable plastics, as taught by this specification.

Blanks of the milled detergent having a length of about 3½" and a width of 2" are fed into the guide box **14** by the moving conveyor belt **21**. Vertical pusher **22** raises one of said blanks to the top of the guide box where the same is held by the lateral pressure of the walls **15** of the guide box. Bottom pusher **20** pushes the blank into the port of the guide box where

it is held by the shoulder 18. In the next upward stroke of vertical pusher 22 a second blank is raised to the top of the guide box and the next forward stroke of the bottom pusher 20 pushes said second blank into the port, thereby pushing the first blank from the guide box into a receiving cavity 12 at the lowermost position of the spider. The spider then is rotated 90° and the detergent is in position for being pressed between dies 26.

The dies 26 are brought forcibly towards one another with sufficient pressure, usually from 50 to 1000 pounds per square inch, e.g., about 250 pounds per square inch to form and press the blank into a cake of detergent having the shape of the cavity defined by the dies and the die box. While the blank is being pressed into shape, at the edges 36 of the dies 26 detergent is forced in the direction of the clearance space, but, because the clearance is small, the detergent is "viscous" and the pressing period is less than a second, none of the detergent flows into and through clearance space 46.

The dies then are withdrawn and the spider again is rotated 90° carrying the pressed cake into the uppermost position. Top pusher 28 then ejects said cake from the cavity whence it falls onto the take-off conveyor 30.

A lubricating material, e.g., mineral oil, carbitol, acetic acid, glycerine, salt solutions, pulverized solids, etc., may be used, if desired, in pressing detergent materials with the apparatus of this invention. If a lubricant is used it may be applied most advantageously to the blanks while the same are being carried to the guide box by conveyor belt 21. Only a minor amount of lubricant need be used, i.e., only about one or two drops need be applied to every fifth or sixth detergent blank.

The detergent pressing apparatus, including die sets of suitable plastics described herein, is adapted for pressing bars and cakes of soaps or synthetic detergents of various compositions employed in the art. It is a particular feature of the invention that blanks and bars comprising synthetic detergents, with or without fatty acid soaps in admixture therewith, can often be pressed without sticking to the die and die box, although these materials are frequently, strongly adherent to metal parts.

The plastic die sets of the present invention may be produced readily and easily by well-known commercial manufacturing processes. The die members may be made by molding or casting. Thus, it is a relatively simple matter, when a plastic die member becomes unusable, to replace the same with another member which is an exact duplicate of the first. Furthermore, a great saving in labor costs is realized since the construction of an accurate plastic die duplicate, unlike the manufacture of metal dies, does not necessitate painstaking and time consuming hand shaping operations.

While there has been described what is at present considered to be the preferred embodiment of the invention, it will be understood, of course, that many modifications and changes and substitutions may be made therein without departing from the true scope of the invention as defined in the appended claims.

All percentages and proportions given in the specification and in the claims are by weight, unless otherwise specified.

What is claimed is:

1. Apparatus for pressing detergent materials into cake form comprising a pair of relatively movable companion die members and a die box, said movable die members each having a working surface of hard, rigid thermoset epoxy resin polymer and being substantially composed of said polymer, the movable die members being of shape which conforms with the die box walls and clears them, the clearance space being small enough to prevent flashing of detergent past the dies during pressing, said epoxy resin polymer having impact strength of about 0.2 to 1 ft. lb. per inch of notch, a Rockwell hardness of about M 80 to M 120, a compressive strength of about 1.3 to 2.8 x 10^4 lbs./sq. in., a flexural strength of about 8,000 to 20,000 lbs./sq. in. and a heat distortion temperature of 100° F. to 550° F.

2. Apparatus according to claim 1 in which the epoxy resin polymer is that resulting from reaction of an epoxy resin of molecular weight of 300 to 4,000 with 80 to 120% of the stoichiometric proportion of hardening agent.

3. Apparatus according to claim 2 in which the epoxy resin is a diglycidyl ether of bisphenol A and the hardening agent is a member of the group consisting of polyfunctional primary and secondary amines, tertiary amines, organic carboxylic acids and organic carboxylic acid anhydrides.

4. Apparatus according to claim 1 in which the die box is lined with a plastic which is of high molecular weight selected from the group consisting of epoxy resin, polyethylene, Micarta, polypropylene and nylon.

References Cited by the Examiner

UNITED STATES PATENTS

288,240	11/1883	Ittner	25—122
849,214	4/1907	Markle et al.	25—122
1,260,002	3/1918	Lanhoffer.	
2,520,570	8/1950	Short	25—7
2,836,530	5/1958	Rees	113—49
2,846,742	8/1958	Wagner	18—47
2,856,637	10/1958	Daniel	18—47
2,965,946	12/1960	Sweet et al.	25—7
2,967,756	1/1961	Mazzucchelli et al.	18—47
2,972,785	2/1961	Touceda	18—47
3,041,989	7/1962	Tanner.	
3,101,065	8/1963	Kalis.	
3,124,092	3/1964	Raynes.	

FOREIGN PATENTS

789,094	1/1958	Great Britain.

OTHER REFERENCES

The Tool Engineer, March 1959, pages 105 and 106 relied upon.

ROBERT F. WHITE, *Primary Examiner.*

MAURICE V. BRINDISI,
ALEXANDER H. BRODMERKEL, *Examiners.*