D. F. CRAWFORD.

AUTOMATIC STOKER.

APPLICATION FILED JUNE 27, 1910.

1,131,214.

Patented Mar. 9, 1915.

3 SHEETS—SHEET 1.

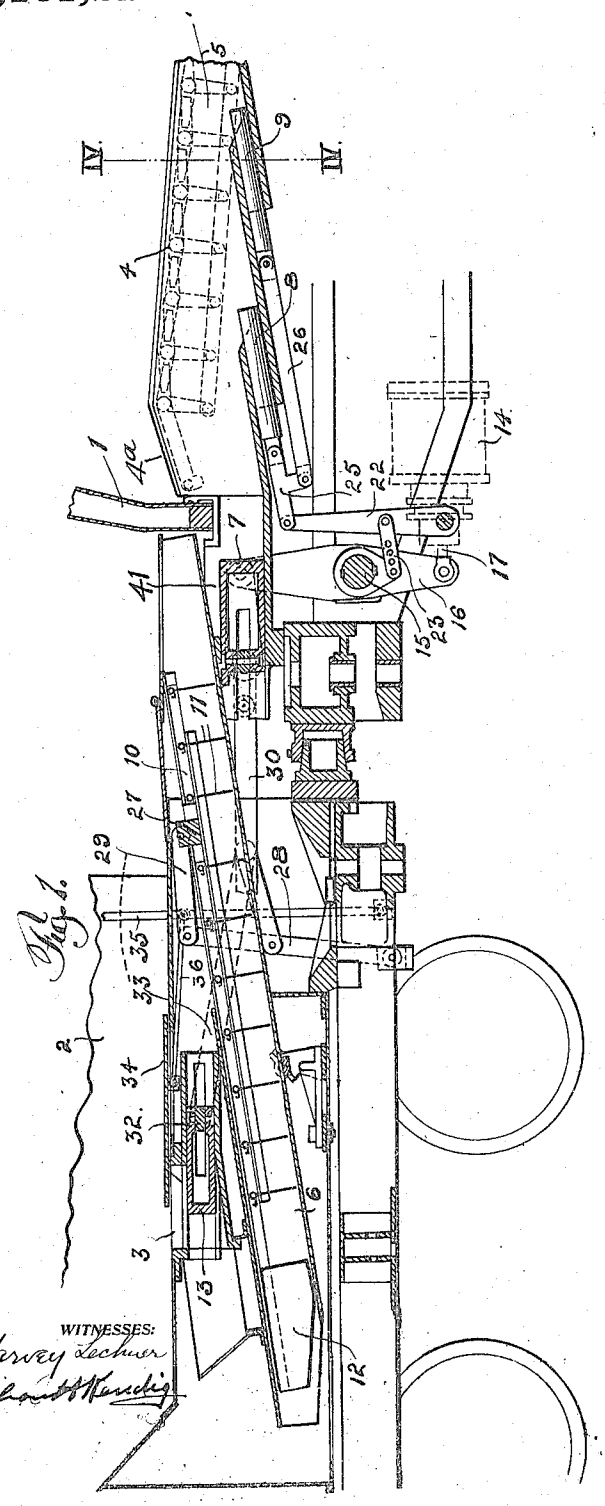

WITNESSES:

Harvey Lechner

Jeliant H Kendig

INVENTOR

D. F. Crawford

BY atty

Paul Synnestvedt

ATTORNEY

D. F. CRAWFORD.

AUTOMATIC STOKER.

APPLICATION FILED JUNE 27, 1910.

1,131,214.

Patented Mar. 9, 1915.

3 SHEETS—SHEET 2.

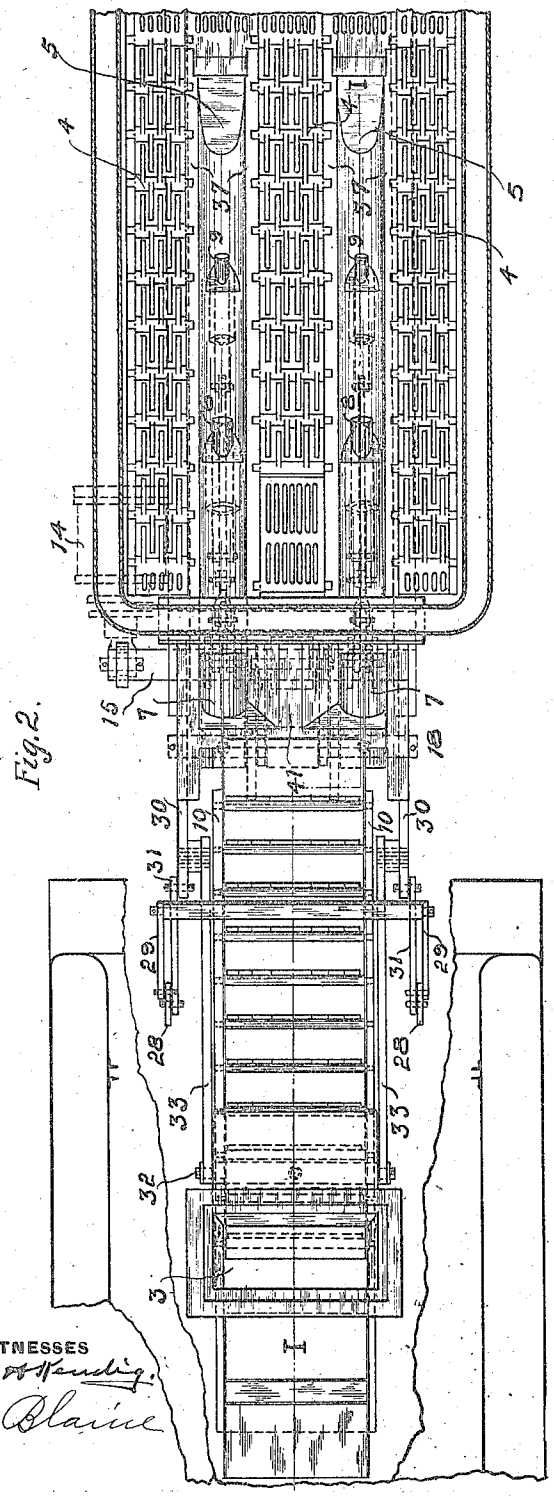

Fig. 2.

WITNESSES

Julian H. Kendig.

L. M. Blaine

INVENTOR

D. F. Crawford

by atty.

Paul Synnestvedt

D. F. CRAWFORD.

AUTOMATIC STOKER.

APPLICATION FILED JUNE 27, 1910.

1,131,214.

Patented Mar. 9, 1915.

3 SHEETS—SHEET 3.

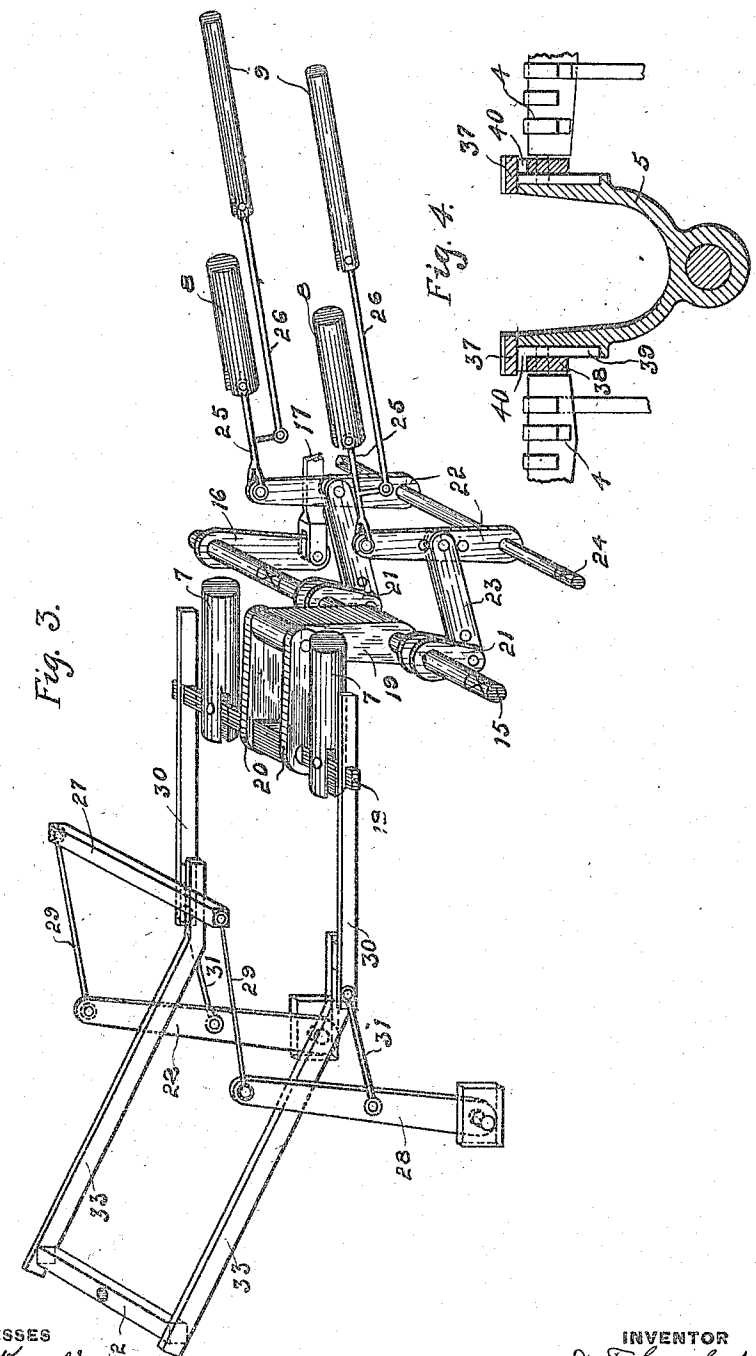

WITNESSES

Gerhard H Kendig

I M Blaine

INVENTOR

D. F. Crawford

by atty

Paul Synnestvedt

UNITED STATES PATENT OFFICE.

DAVID FRANCIS CRAWFORD, OF PITTSBURGH, PENNSYLVANIA.

AUTOMATIC STOKER.

1,131,214. Specification of Letters Patent. Patented Mar. 9, 1915.

Application filed June 27, 1910. Serial No. 569,161.

To all whom it may concern:

Be it known that I, DAVID F. CRAWFORD, a citizen of the United States, residing at Pittsburgh, in the county of Allegheny and State of Pennsylvania, have invented certain new and useful Improvements in Automatic Stokers, of which the following is a specification.

The invention relates to automatic stokers and more particularly to automatic stokers for locomotives, although certain features of the construction are of general application. The principal objects of the invention are the provision of improved feed means for a furnace employing a plurality of feed troughs; the provision of improved means for regulating the supply of fuel; the provision of an arrangement whereby the coöperative action of the main and auxiliary feed pistons employed is rendered more efficient; and the provision of a furnace construction whereby the amount of fuel falling through the grates is reduced. One embodiment of the invention is illustrated in the accompanying drawing wherein,

Figure 1 is a section on the line I—I of Figure 2,

Figure 2 is a plan view of the furnace transfer mechanism with the floor of the tender and upper portion of the fire box broxen away,

Figure 3 is a diagrammatic perspective view of the operating connections, and

Figure 4 is a partial enlarged section on the line IV—IV of Figure 1.

Referring to the general arrangement of parts, the principal part may be enumerated as follows. 1 is the locomotive fire box which may be of any approved form; 2 is the tender provided in its floor with the fuel outlet passage 3; 4, 4, 4, are the grates arranged along the sides of the feed troughs 5, 5; 6 is a chute for conveying the coal from the tender to a position adjacent the feed mechanism of the stoker; 7, 7 are the main feed pistons arranged at the rear ends of the feed troughs 5, 5; 8, 8 and 9, 9 are auxiliary feed pistons; 10, 10 are a pair of slide bars mounted in the chute 6 and carrying the feed flaps 11; 12 is a feed piston carried by the bars 10, 10; 13 is a crushing piston for feeding the coal to the chute 6; 14 is a steam cylinder mounted at the side of the locomotive and 15 is a transverse shaft operated from the steam cylinder 14 by means of the crank arm 16 and piston rod 17.

The connections whereby the various reciprocatory parts are all operated from the oscillatory transverse shaft 15 are clearly indicated in the perspective diagrammatic view, Fig. 3. From this view it will be seen that the main feed pistons 7, 7 are operated by means of a cross head 18 connected to the shaft 15 by means of the crank arm 19 and the pair of connecting rods 20. The auxiliary feed pistons 8, 8 are operated from the shaft 15 by means of the cranks 21, 21 connected to the levers 22, 22 by means of the connecting rods 23, 23, the levers 22, 22, being pivoted at 24, and having their upper ends connected to the pistons by the links 25, 25. The other auxiliary pistons 9, 9 are operated from the links 25, 25 by means of the connecting rods 26, 26. The slide bars 10, 10 in the chute 6 are connected to a cross head 27, and this cross head 27 is pivotally connected to the upper ends of the levers 28, 28 by means of the connecting rods 29, 29, the levers 28 being pivoted at their ends to the frame work of the tender. The levers 28, 28 are oscillated from the cross head 18 by means of the connecting rods 30, 30 and 31, 31. The crushing piston 13 is carried by a cross head 32, and this cross head 32 is reciprocated from the connecting rods 30, 30 by means of the connecting members 33, 33.

From the foregoing it will be seen that all of the operating mechanism is moved in unison from the single transverse operating shaft 15. The arrangement for reciprocating the auxiliary feed pistons 8 and 9 secures a movement of such pistons in opposition to that of the feed piston 7, the pistons 8 and 9 moving to rear as the piston 7 moves forward. This arrangement has been found to give a more effective feed than the arrangement heretofore used in which the pistons all moved in the same direction at the same time. The arrangement of connecting links 27, 28, 29, 30 and 31 secures for the rods 10 a longitudinal movement

greater than that of the pistons 7 and 13, so that any danger of the clogging of the fuel in the chute 6 is avoided.

In order that the supply of fuel to the furnace may be regulated without the necessity of changing the speed of operation of the feeding members, the sliding door 34 working over the passage 3 in the bottom of the tender is provided. This door is operated by means of the handle 35 connected to the door by means of the connecting rod 36. By this means the supply of fuel to the furnace may be very easily regulated or cut off completely as desired.

Another feature of my invention resides in the furnace construction illustrated in Fig. 4. As here illustrated the sides of the trough 5 are extended above the grate 4 and carry the laterally extending plates 37, which plates are preferably detachably secured in position by means of bolts (not shown), and can be readily replaced when burned out. The ends of the grate bars adjacent the sides of the trough are supported upon bars 38, which bars are spaced away from the sides of the trough by means of ribs 39, so that an air space is provided between the sides of the bars 38 and the sides of the trough 5. The plates 37 are also located above the top of the bars a distance sufficient to provide the air spaces 40. By this means the sides of the trough and the bars 38 are kept relatively cool, and the danger of burning out the plates 37 is reduced. The arrangement also provides for an additional supply of air to the fuel. The use of the plates 37 is desirable in that the fuel in passing over such plates tends to coke and fuse together and when such fuel passes upon the grate bars a smaller quantity thereof falls through and is lost than would be the case if the fuel were supplied to the grates in this ordinary loose condition, much of the fuel as used in locomotives being so fine as to readily fall through the grates into the ash pan. Much fuel which would otherwise be lost is thus saved.

As indicated at 4^a in Fig. 1, the rear edge of the trough is beveled away, thus reducing the height of the wall of the trough at this point, and the side grate is correspondingly inclined along the beveled portion of the trough. This arrangement promotes a feed over the rear edge of the trough and a distribution of fuel on the adjacent portion of the side grate which would otherwise be insufficiently supplied with fuel.

Only a single chute 6 is provided for supplying the troughs 5, 5 with fuel, such chute 6 discharging upon the ridge 41 (Fig. 2), whose sides incline downwardly to the cylinders in which the piston 7, 7 are located, so that the fuel deposited upon the ridge will be divided and supplied to the tube sections. The inclined sections of the ridge 41 taken in connection with a vibration of the engine secures the proper lateral feed of the fuel. The chute is further of sufficient width to discharge directly into the cylinders carrying the pistons 7, 7.

The pistons 9, 9 are preferably made of smaller diameter and feeding capacity than the pistons 8, 8 as the depth of the trough at the forward end is less and the forward feed required at this point less. Where the pistons are used in tandem as illustrated the feeding capacity is preferably made to decrease as the forward end of the trough is approached and the depth decreases.

Having thus described my invention and illustrated its use, what I claim as new and desire to secure by Letters Patent is the following:—

1. The combination in a locomotive, of a furnace, a feed trough extending therethrough, a main reciprocatory feed member at the end of the trough, a supplemental reciprocatory feed member in the trough, a transverse oscillatory shaft, power means for rocking the shaft, crank arms projecting oppositely from such shaft, a connection from one of such crank arms, to the main feed member, a lever pivoted at the side of the said shaft and below such shaft, a link connection from the other crank arm to the lever above the pivot of said lever, and a pivotal link connection between the upper end of the lever and the supplemental feed member.

2. In combination in a furnace, a feed trough extending into the furnace, substantially flat rocking grates at the sides of the trough below the top thereof, grate supporting bars secured along the sides of the trough but spaced away therefrom and carrying the ends of the grate bars, and substantially flat coking plates fixed against movement upon the upper edges of the trough with their lower faces lying above and spaced away from the top surfaces of the grate supporting bars.

3. In combination in a furnace, a feed trough extending into the furnace, grates at the sides of the trough below the upper edges thereof, grate supporting members carried by the sides of the trough below its upper edges, and substantially flat coking plates fixed against movement on the upper edges of the trough with their lower faces spaced away from the grate supporting members to provide air spaces and lying above the top surfaces of the grates.

4. The combination in an underfeed stoker for a furnace, an underfeed trough extending longitudinally through the furnace and having its rear edge reduced in height to permit a lateral feed over such rear edge, and

a side grate having its rear portion downwardly inclined to the rear to receive the feed over the said rear edge of the trough.

5. The combination in an underfeed stoker for a furnace, an underfeed trough extending longitudinally through the furnace and having its rear edge downwardly inclined to the rear, and a side grate having its rear portion downwardly inclined to correspond to the inclination of the rear edge of the trough.

In testimony whereof I have hereunto signed my name in the presence of the two subscribing witnesses.

DAVID FRANCIS CRAWFORD

Witnesses:

L. A. MYERS,

I. M. BLAINE.