(12) PATENT
(19) AUSTRALIAN PATENT OFFICE

(11) Application No. **AU 199944734 B2**
(10) Patent No. **746405**

(54) Title
Sanitary napkin

(51)[7] International Patent Classification(s)
A61F 013/46 **A61F 013/15**

(21) Application No: **199944734** (22) Application Date: **1999.08.27**

(30) Priority Data

(31) Number	(32) Date	(33) Country
10-253634	**1998.09.08**	**JP**

(43) Publication Date : **2000.03.16**
(43) Publication Journal Date : **2000.03.16**
(44) Accepted Journal Date : **2002.05.02**

(71) Applicant(s)
Uni-Charm Corporation

(72) Inventor(s)
Satoshi Mizutani

(74) Agent/Attorney
PHILLIPS ORMONDE and FITZPATRICK,367 Collins Street,MELBOURNE VIC 3000

(56) Related Art
US 5853403

A B S T R A C T

A sanitary napkin 1 includes a liquid-pervious topsheet 2, a liquid-impervious backsheet 3 and a liquid-absorbent core 4 disposed therebetween. The topsheet 2 extends to transversely opposite side edges 1a of the napkin 1 with interposition of pleats 10a, along which side edges 1a the topsheet 2 is bonded to the backsheet 3. The core includes a lower absorbent core 4 and an upper absorbent core 5. The pleats 10a lie between transversely opposite side edges 4a of the lower absorbent core 4 and transversely opposite side edges 5a of the upper absorbent core 5. The topsheet 2 are provided along the opposite side edge of the upper absorbent core 5 with elasticity being effective longitudinally of the napkin 1.

AUSTRALIA

Patents Act

COMPLETE SPECIFICATION
(ORIGINAL)

Class Int. Class

Application Number:
Lodged:

Complete Specification Lodged:
Accepted:
Published:

Priority

Related Art:

Name of Applicant:

Uni-Charm Corporation

Actual Inventor(s):

Satoshi Mizutani

Address for Service:

PHILLIPS ORMONDE & FITZPATRICK
Patent and Trade Mark Attorneys
367 Collins Street
Melbourne 3000 AUSTRALIA

Invention Title:

SANITARY NAPKIN

Our Ref : 596296
POF Code: 1647/76530

The following statement is a full description of this invention, including the best method of performing it known to applicant(s):

SANITARY NAPKIN

This invention relates to a sanitary napkin absorption and containment of menstrual discharge.

Japanese Utility Model Application Disclosure Gazette (Kokai) No. Hei7-33315 discloses a sanitary napkin consisting of upper and lower napkins each including a liquid-absorbent core covered with a liquid-pervious sheet. The upper napkin having a longitudinal dimension smaller than that of the lower napkin lies on a middle region of the lower napkin. A pair of elastic members extend longitudinally along transversely opposite side edges of the upper napkin beyond longitudinally opposite ends of the upper napkin and are fixed under tension to longitudinally opposite ends of the lower napkin at respective ends of these elastic members. The upper and lower napkins can relatively move without being restricted by each other within a considerably wide range.

In the above sanitary napkin, a lower surface of the upper napkin normally remains in contact with the upper surface of the lower napkin and operate as if these two napkins are assembled in a single napkin. Specifically, the liquid-pervious sheet covering the upper napkin is placed upon the liquid-pervious sheet covering the lower napkin.

Such situation may obstruct a rapid transfer of menstrual discharge from the upper napkin to the lower napkin. In consequence, there is any apprehension that a portion of menstrual discharge might leak sideways before it transfers to the lower napkin especially when a large quantity of menstrual discharge is discharged.

In view of the problem as has been described above, it is an object of this invention to provide a sanitary napkin including upper and lower liquid-absorbent core but improved so that menstrual discharge can rapidly transfer from the upper absorbent core to the lower absorbent core and thereby any apprehensive leakage of menstrual discharge can be avoided.

According to this invention, there is provided a sanitary napkin including a liquid-pervious topsheet, a liquid-impervious backsheet and a liquid-absorbent core disposed between the topsheet and the backsheet, the sanitary napkin being contoured by a pair of opposite side edges extending longitudinally of the napkin and a pair of opposite ends extending between the pair of opposite side edges, wherein: the topsheet is dimensioned to have a width larger than that of the backsheet and transversely opposite sides of

the topsheet is folded back inwardly of the napkin along a pair of folding lines extending longitudinally of the napkin and the folded portions are further folded outwardly of the napkin so as to form a pair of pleats and extend from the pleats to the respective side edges of the napkin along which the topsheet is bonded to the backsheet; the absorbent core includes a lower absorbent core and an upper absorbent core, the lower absorbent core is placed on an inner surface of the backsheet and extends between the opposite side edges and between longitudinally opposite ends of the napkin; the upper absorbent core is dimensioned to be shorter than the lower absorbent core and separably placed upon an inner surface of the lower absorbent core; the upper absorbent core is bonded to an inner surface of the topsheet so that the upper absorbent core is spaced from the opposite ends of the napkin and the pleats lie between the transversely opposite side edges of the lower absorbent core and the transversely opposite side edges of the upper absorbent core; and at least portions of said topsheet are provided along the opposite side edges of the upper absorbent core with elasticity being effective longitudinally of the napkin.

According to one preferred embodiment of this invention, the upper absorbent core lies to one of the longitudinally

opposite ends of the napkin.

According to another preferred embodiment of this invention, the elasticity of the topsheet is given by elastic members in the form of threads, ribbons or sheets.

According to still another preferred embodiment of this invention, the elasticity of the topsheet is given by an elastic sheet used as the topsheet being bonded under tension in the longitudinal direction.

According to further another preferred embodiment of this invention, the maximum dimension by which the upper absorbent core is spaced from the lower absorbent core in response to contraction of the topsheet is in a range of 5 ~ 50 mm.

According to an additional preferred embodiment of this invention, a plurality of said pleats are formed on both sides of the upper absorbent core, respectively.

Fig. 1 is a plan view showing a partially cut away sanitary napkin according to the invention;

Fig. 2 is a sectional view taken along a line A-A in Fig. 1;

Fig. 3 is a perspective view showing the partially cut away napkin with its elastic members contracting;

Fig. 4 is a perspective view of the napkin inclusive of

its section taken along a line B-B in Fig. 3; and

Fig. 5 is a sectional view taken along a line C-C in Fig. 3.

Details of a sanitary napkin according to this invention will be more fully understood from the description given hereunder with reference to the accompanying drawings.

Fig. 1 is a perspective view showing a partially cut away sanitary napkin 1 and Fig. 2 is a sectional view taken along a line A-A in Fig. 1. A sanitary napkin 1 is elongate and includes a liquid-pervious topsheet 2, a liquid-impervious backsheet 3, a liquid-lower absorbent core 4 and a liquid-upper absorbent core 5 overlying the lower absorbent core 4. The sanitary napkin 1 is contoured by a pair of transversely opposite side edges 1a extending longitudinally and a pair of longitudinally opposite ends 1b extending between the pair of side edges 1a.

A portion 10 of the topsheet 2 to cover a transversely middle region of the napkin 1 is folded back inwardly of the napkin 1 along a pair of folding lines 12 extending in parallel to the respective side edges 1a of the napkin 1. Then the portions folded in this manner are folded outwardly of the napkin 1 so as to form a pair of pleats 10a and

thereafter extend to the respective side edges 1a of the napkin 1, along which the topsheet 2 is bonded to the backsheet 3. As will be understood from such manner in which the topsheet 2 covers the transversely middle region of the napkin 1, the topsheet 2 is dimensioned to have a width considerably larger than that of the backsheet 3.

The backsheet 3 is substantially flat and is formed on its lower surface with a pair of adhesive fastening zones 14 used to fasten the napkin 1 to an undergarment worn by a napkin wearer and protectively covered with respective release sheets 14a.

The lower absorbent core 4 is placed on an inner surface of the backsheet 3 and extends between the side edges 1a and between the longitudinally opposite ends 1b. An upper surface of the lower absorbent core 4 has its transversely middle region 4c placed in contact with a lower surface of the upper absorbent core 5. Transversely opposite side edges 4a of the lower absorbent core 4 are bonded to a lower surface of the topsheet 2 by means of adhesive agent 21. Intermediate regions 4d defined between the middle region 4c and the respective side edges 4a are not bonded to the topsheet 2. Both the middle region 4c and the intermediate regions 4d are not bonded to the upper absorbent core 5 as

well as to the topsheet 2 so that the regions 4c, 4d can be freely spaced from the upper absorbent core 5 and the topsheet 2. The longitudinally opposite ends 4b of the lower core 4 are bonded to an inner surface of the topsheet 2 at locations slightly inside the longitudinally opposite ends 1b of the napkin 1. A lower surface of the lower absorbent core 4 is bonded to an inner surface of the backsheet 3 by means of adhesive agent 21.

The upper absorbent core 5 is smaller than the lower absorbent core 4 in length as well as in width. Preferably, the upper absorbent core 45 is formed so that its thickness gradually decreases from the middle region toward the side edges and separably placed upon the inner surface of the lower absorbent core 4. Longitudinally opposite ends 5b of the upper absorbent core 5 lie inside the respective side edges 4b of the lower absorbent core 4 and are spaced from the respective ends 1b of the napkin 1 by a predetermined distance. Preferably, the upper absorbent core 5 lies to the front end of the napkin 1 during actual use of the napkin 1. The upper surface of the upper absorbent core 5 defined between its transversely opposite side edges 5a is bonded to the inner surface of the portion 10 of the topsheet 2 to cover the transversely middle region of the napkin 1 by means

of adhesive agent 21.

Thread-like elastic members 6 extending between the longitudinally opposite ends 1b of the napkin 1 are secured under tension to the inner surface of the topsheet 2 along the side edges of the upper absorbent core 5 by means of adhesive agent (not shown). These elastic members 6 having a contractile force sufficient to longitudinally curve the napkin 1 convexly downward as the elastic members 6 contract. Elongation percentage of these elastic members 6 is 20 ~ 200 %. It should be understood that the thread-like elastic members 6 may be replaced by ribbon-like elastic members.

Portions of the topsheet 2 extending longitudinally along the respective elastic members 6 further extend outward beyond the side edges of the upper absorbent core 5. It is possible to provide also along respective free edges of these extensions with the elastic members 6 and thereby to improve a side flap function of these extensions tending to rise toward the wearer's skin.

Portions of the topsheet 2 and the backsheet 3 extending outward beyond a peripheral edge of the lower absorbent core 4 and placed upon each other are bonded together by means of adhesive agent or heat-sealing treatment to define the transversely opposite side edges 1a and the

longitudinally opposite ends 1b of the napkin 1. During actual use of the napkin 1, the lower surface of the upper core 5 is normally in contact with the upper surface of the lower absorbent core 4, the adhesive fastening zones 14 of the backsheet 3 are fastened to an inner surface of the undergarment worn by the napkin wearer, and the upper surface of the upper absorbent core 5 is placed against the wearer's pudendum with interposition of the topsheet 2. Menstrual discharge once absorbed by the upper absorbent core 5 transfers to the lower absorbent core 4 so far as the lower absorbent core 4 is maintained in contact with the upper absorbent core 5.

Fig. 3 is a perspective view showing the partially cut away napkin 1 with the elastic members 6 contracting and Fig. 4 is a perspective view of the napkin 1 inclusive of a section taken along a line B-B in Fig. 3. Supposed that the napkin 1 is still not put on the wearer's body, the napkin 1 is longitudinally curved convexly downward as the elastic members 6 contract against a rigidity of the lower absorbent core 4 and, in consequence, the upper absorbent core 5 is spaced upward from the lower absorbent core 4. Thus, the pleats 10a of the topsheet 2 vertically spread between the upper absorbent core 5 and the lower absorbent core 4.

Contraction of the elastic members 6 causes the topsheet 2 to be formed with gathers along its zones in which the elastic members 6 are bonded to the topsheet 2.

Fig. 5 is a sectional view taken along a line C-C in Fig. 3 as shown, the upper absorbent core 5 extends practically in a horizontal direction longitudinally of a napkin 1. The maximum dimension as measured from the upper surface of the lower absorbent core 4 to the lower surface of the upper absorbent core 5 is preferably in a range of 5 ~ 50 mm. Even if the undergarment slip down and the napkin 1 is moved away from the wearer's body, the upper absorbent core 5 is spaced from the lower absorbent core 4 to remain in contact with the wearer's pudendum so that menstrual discharge may be rapidly absorbed. In this manner, the napkin 1 is free from any apprehension that undesirable leakage of menstrual discharge might readily occur.

In a specific embodiment of the napkin 1 according to this invention, both the upper absorbent core 5 and the lower absorbent core 4 are formed by compressing fluff pulp or a mixture of fluff pulp and superabsorptive polymer particles and covering it with a water-absorbent sheet 13 such as tissue paper.

The elastic member 6 may be made of synthetic rubber,

natural rubber, a composite material such as a film combined with synthetic rubber, a spun bond nonwoven fabric or a melt blown nonwoven fabric both including synthetic rubber as its principal component or a nonwoven fabric to which a suitable elastic material is secured under tension, or the like. In the case of the elastic member 6 including a nonwoven fabric, this nonwoven fabric is secured under tension to the inner surface of the topsheet 2 between the longitudinally opposite ends 5b of the upper absorbent core 5 and the longitudinally opposite ends 1b of the napkin 1. While the elastic members 6 are shown to extend between the longitudinally opposite ends 1b, it is also possible to arrange so that these elastic members 6 extend only between the longitudinally opposite ends 5b of the upper absorbent core 5 and the longitudinally opposite ends 1b of the napkin 1, respectively.

Stock material useful for the topsheet 2 includes a hydrophobic nonwoven fabric, a hydrophobic nonwoven fabric treated with hydrophiling agent or a hydrophile nonwoven fabric made of fibers mixed with hydrophiling agent. A water-pervious sheet having an elasticity also can be used as stock material for the topsheet 2. In this case, such elastic sheet may be secured, under tension between the longitudinally opposite ends 1b of the napkin 1, to the

portions of the backsheet 3 extending outward beyond the peripheral edge of the lower absorbent core 4. In this manner, use of the elastic members 6 can be eliminated. It is also possible to use a liquid-pervious apertured film of thermoplastic synthetic resin in the place of the nonwoven fabric and such film includes an elastic film. No matter what type of stock material is used, the topsheet 2 may be formed particularly in its region covering the upper absorbent core 5 with a plurality of and/or large-diametered liquid-pervious apertures.

With the sanitary napkin according to this invention, undesirable leakage of menstrual discharge can be effectively avoided even when the undergarment worn by the napkin wearer slips down and consequently the napkin adhesively fastened to the inner surface of the undergarment crotch region moves away from the wearer's body, because the upper absorbent core is spaced upward from the lower absorbent core so as to remain in contact with the wearer's body. The upper absorbent core is free to move relatively to the lower absorbent core in a sufficiently wide range to ensure that the upper absorbent core can remain in contact with the wearer's body and thereby avoid undesirable leakage of menstrual discharge even when the lower absorbent core moves

together with the undergarment back and forth or rightward and leftward relative to the wearer's body.

In the normal state of this napkin, the upper and lower absorbent cores are in direct contact with each other so that transfer of menstrual discharge from the upper absorbent core to the lower absorbent core can rapidly occur.

THE CLAIMS DEFINING THE INVENTION ARE AS FOLLOWS:

1. A sanitary napkin including a liquid-pervious topsheet, a liquid-impervious backsheet and a liquid-absorbent core disposed between the topsheet and the backsheet, said sanitary napkin being contoured by a pair of opposite side edges extending longitudinally of said napkin and a pair of opposite ends extending between said pair of opposite side edges, wherein:

said topsheet is dimensioned to have a width larger than that of said backsheet and said topsheet is folded back inwardly of said napkin along a pair of folding lines extending longitudinally of said napkin and the folded portions are further folded outwardly of said napkin so as to form a pair of pleats and extend from the pleats to the respective side edges of said napkin along which said topsheet is bonded to said backsheet;

said absorbent core includes a lower absorbent core and an upper absorbent core, said lower absorbent core is placed on an inner surface of said backsheet and extends between said opposite side edges and between said opposite ends of said napkin;

said upper absorbent core is dimensioned to be shorter

than said lower absorbent core and separably placed upon an inner surface of said lower absorbent core;

said upper absorbent core is bonded to an inner surface of said topsheet so that said upper absorbent core is spaced from the opposite ends of said napkin and said pleats lie between the transversely opposite side edges of said lower absorbent core and the transversely opposite side edges of said upper absorbent core; and

at least portions of said topsheet are provided along said opposite side edges of said upper absorbent core with elasticity being effective longitudinally of said napkin.

2. A sanitary napkin according to Claim 1, wherein said upper absorbent core lies to one of said opposite ends of said napkin.

3. A sanitary napkin according to claim 1 or claim 2, wherein said elasticity of said topsheet is given by elastic members in the form of threads, ribbons or sheets.

4. A sanitary napkin according to claim 1 or claim 2, wherein said elasticity of said topsheet is given by an elastic sheet used as said topsheet being bonded under tension in the

longitudinal direction of said backsheet.

5. A sanitary napkin according to any one of the preceding claims, wherein the maximum dimension by which said upper absorbent core is spaced from said lower absorbent core in response to contraction of said topsheet is in a range of 5 ~ 50 mm.

6. A sanitary napkin according to any one of the preceding claims, wherein a plurality of said pleats are formed on both sides of said upper absorbent core, respectively.

7. A sanitary napkin substantially as herein before described with reference to the illustrations.

DATED: 26 August 1999
PHILLIPS ORMONDE & FITZPATRICK
Attorneys for:
UNI-CHARM CORPORATION

David B Fitzpatrick

FIG. 1

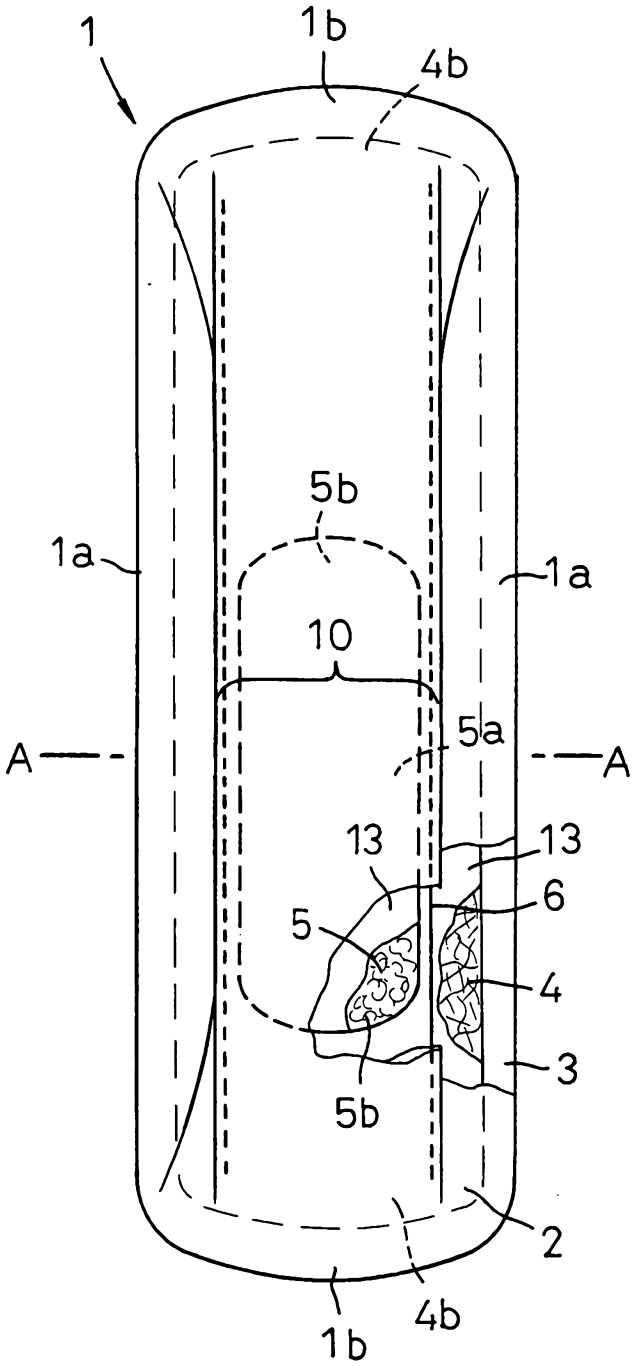

FIG.2

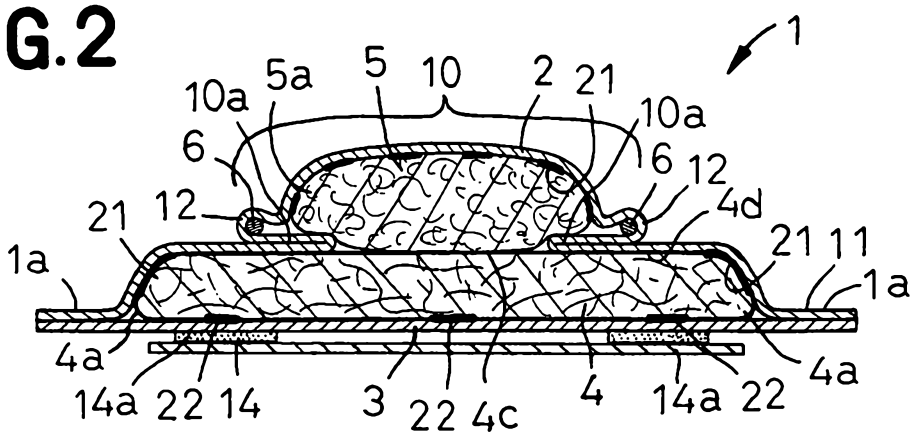
1
10a
5a
5
10
2
21
10a
6
6
12
21
12
4d
21
11
1a
1a
4a
4a
14a
22
14
3
22
4c
4
14a
22

FIG.4

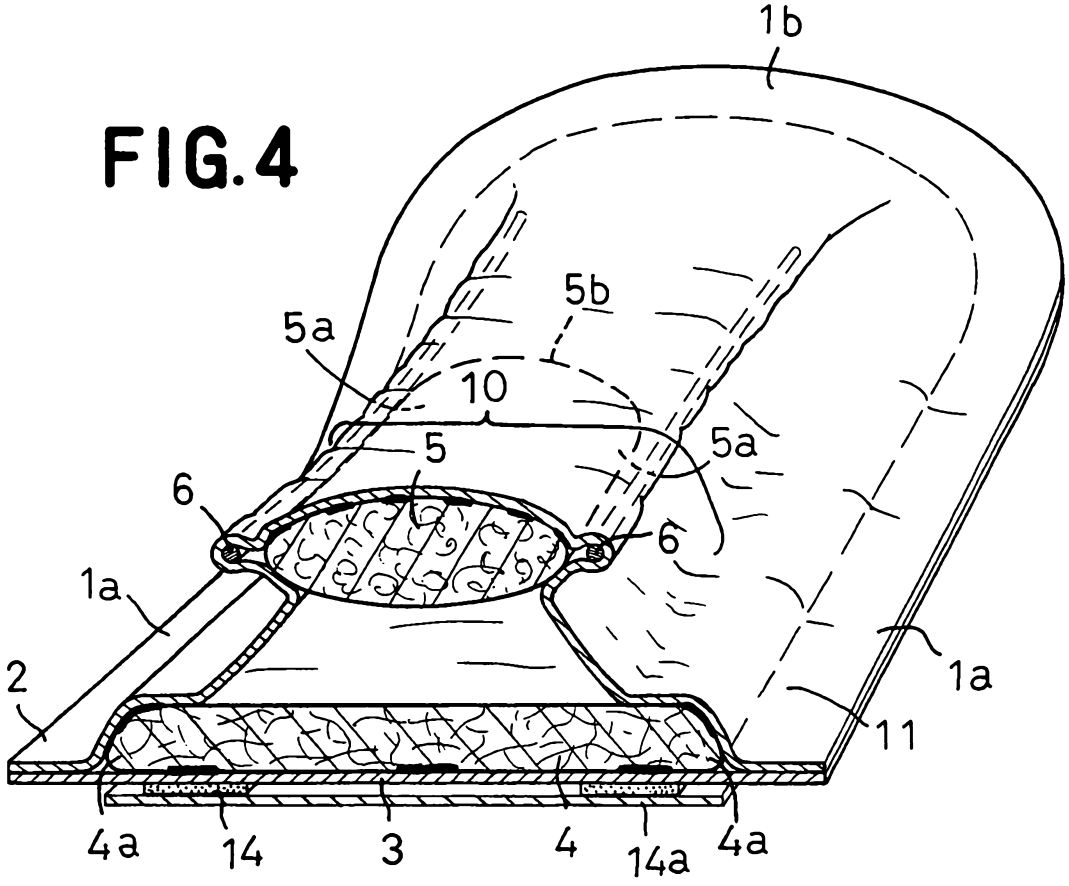
1b
5b
5a
10
5
5a
6
6
1a
2
1a
11
4a
14
3
4
14a
4a

FIG.3

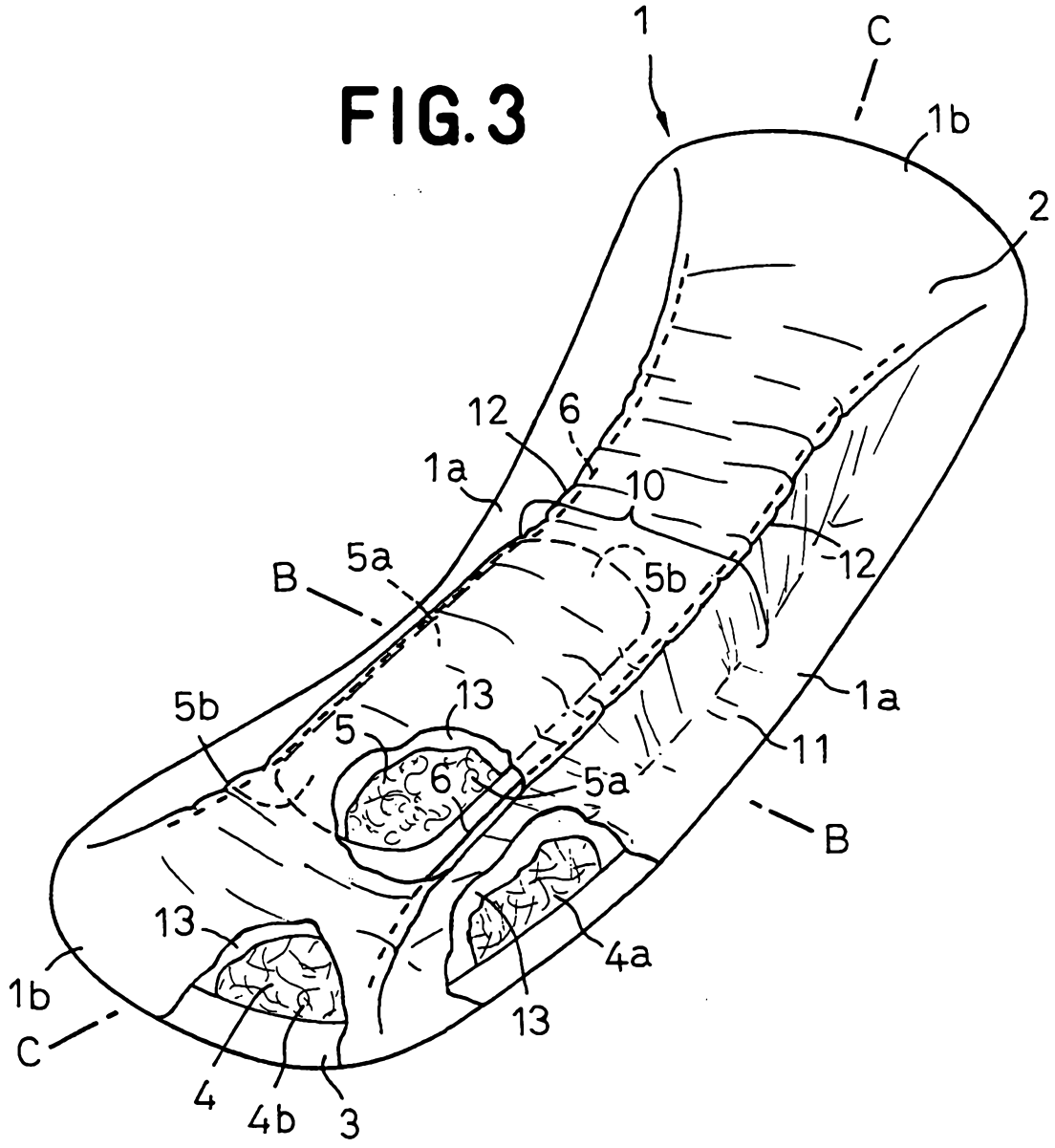

FIG.5

