(12) INTERNATIONAL APPLICATION PUBLISHED UNDER THE PATENT COOPERATION TREATY (PCT)

(19) World Intellectual Property Organization
International Bureau

(43) International Publication Date
24 May 2018 (24.05.2018)

WIPO | PCT

(10) International Publication Number
WO 2018/094342 A1

(51) International Patent Classification:
A61N 1/372 (2006.01) *A61N 1/375* (2006.01)
A61N 1/39 (2006.01) *A61N 1/378* (2006.01)

(21) International Application Number:
PCT/US2017/062583

(22) International Filing Date:
20 November 2017 (20.11.2017)

(25) Filing Language: English

(26) Publication Language: English

(30) Priority Data:
62/424,896 21 November 2016 (21.11.2016) US

(71) Applicant: **CARDIAC PACEMAKERS, INC** [US/US]; 4100 Hamline Avenue North, St. Paul, Minnesota 55112 (US).

(72) Inventors: **LINDER, William J.**; 2640 Kyle Avenue N., Golden Valley, Minnesota 55422 (US). **MAILE, Keith R.**; 520 14th Street NW, New Brighton, Minnesota 55112 (US). **KOOP, Brendan Early**; 17529 Lever Street NE, Ham Lake, Minnesota 55304 (US). **ROOT, Michael J.**; 1066 Cripple Creek Pass, Lino Lakes, Minnesota 55038 (US).

(74) Agent: **TUFTE, Brian N.**; 100 South 5th Street, Suite 600, Minneapolis, Minnesota 55402 (US).

(81) Designated States *(unless otherwise indicated, for every kind of national protection available)*: AE, AG, AL, AM, AO, AT, AU, AZ, BA, BB, BG, BH, BN, BR, BW, BY, BZ, CA, CH, CL, CN, CO, CR, CU, CZ, DE, DJ, DK, DM, DO, DZ, EC, EE, EG, ES, FI, GB, GD, GE, GH, GM, GT, HN, HR, HU, ID, IL, IN, IR, IS, JO, JP, KE, KG, KH, KN, KP, KR, KW, KZ, LA, LC, LK, LR, LS, LU, LY, MA, MD, ME, MG, MK, MN, MW, MX, MY, MZ, NA, NG, NI, NO, NZ, OM, PA, PE, PG, PH, PL, PT, QA, RO, RS, RU, RW, SA, SC, SD, SE, SG, SK, SL, SM, ST, SV, SY, TH, TJ, TM, TN, TR, TT, TZ, UA, UG, US, UZ, VC, VN, ZA, ZM, ZW.

(84) Designated States *(unless otherwise indicated, for every kind of regional protection available)*: ARIPO (BW, GH, GM, KE, LR, LS, MW, MZ, NA, RW, SD, SL, ST, SZ, TZ, UG, ZM, ZW), Eurasian (AM, AZ, BY, KG, KZ, RU, TJ, TM), European (AL, AT, BE, BG, CH, CY, CZ, DE, DK, EE, ES, FI, FR, GB, GR, HR, HU, IE, IS, IT, LT, LU, LV, MC, MK, MT, NL, NO, PL, PT, RO, RS, SE, SI, SK, SM, TR), OAPI (BF, BJ, CF, CG, CI, CM, GA, GN, GQ, GW, KM, ML, MR, NE, SN, TD, TG).

Published:
— *with international search report (Art. 21(3))*

(54) Title: IMPLANTABLE MEDICAL DEVICE WITH A MAGNETICALLY PERMEABLE HOUSING AND AN INDUCTIVE COIL DISPOSED ABOUT THE HOUSING

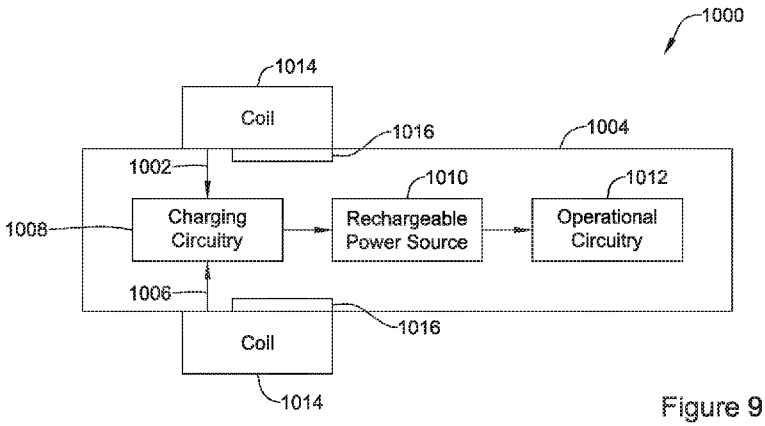

Figure 9

(57) Abstract: An implantable medical device (IMD) with an inductive coil for wireless communication and/or power transfer. The inductive coil may be disposed about a housing of the IMD. The housing may include a magnetically permeable material that is configured to operate as a flux concentrator for concentrating non-radiative near-field energy through the inductive coil. In some cases, the near-field energy may be captured and converted into electrical energy that may be used to recharge a rechargeable power source of the IMD.

WO 2018/094342 A1

IMPLANTABLE MEDICAL DEVICE WITH A MAGNETICALLY PERMEABLE HOUSING AND AN INDUCTIVE COIL DISPOSED ABOUT THE HOUSING

CROSS REFERENCE TO RELATED APPLICATIONS

[0001] This application claims the benefit of U.S. Provisional Patent Application Serial No. 62/424,896 filed on November 21, 2016, the disclosure of which is incorporated herein by reference.

TECHNICAL FIELD

[0002] The disclosure relates generally to implantable medical devices, and more particularly to implantable medical devices that have an inductive coil for wireless communication and/or power transfer.

BACKGROUND

[0003] Implantable medical devices are commonly used to perform a variety of functions, such as to monitor one or more conditions and/or delivery therapy to a patient. For example, an implantable medical device may deliver neurostimulation therapy to a patient. In another example, an implantable medical device may simply monitor one or more conditions, such as pressure, acceleration, cardiac events, and may communicate the detected conditions or events to another device, such as another implantable medical device or an external programmer.

[0004] In some cases, an implantable medical device may be configured to deliver pacing and/or defibrillation therapy to a patient. Such implantable medical devices may treat patients suffering from various heart conditions that may result in a reduced ability of the heart to deliver sufficient amounts of blood to a patient's body. In some cases, heart conditions may lead to rapid, irregular, and/or inefficient heart contractions. To help alleviate some of these conditions, various devices (e.g., pacemakers, defibrillators, etc.) are often implanted into a patient's body. When so provided, such devices can monitor and provide therapy, such as electrical stimulation therapy, to the patient's heart to help the heart operate in a more normal, efficient and/or safe manner. For some conditions, a patient may have multiple implanted devices that cooperate to monitor and/or provide therapy to the patient's heart.

[0005] The size of many implantable medical devices is anatomically constrained. For example, leadless cardiac pacemakers are often placed within a heart chamber. Due to their

relatively small size, and because of their long life expectancy, a large fraction of the internal space of such implantable medical devices is often consumed by a battery or other power source. As the battery life determines the useful life expectancy of the implantable medical device, there is a desire to make the batteries as large as possible within the confines of the available space.

[0006] One approach to reduce the size of the power source is to provide a remote battery recharge capability for recharging a rechargeable power source of the implantable medical device. This may give the implantable medical device a longer useful life expectancy and/or may not require as much battery space permitting a significantly smaller device size. A smaller device size may make the device more easily deliverable and implantable in the body, allow the device to be implantable in smaller and more confined spaces in the body, and/or may make the device less expensive to produce.

[0007] To help reduce the size of the power source, an inductive coil may be carried by the implantable medical device for wirelessly receiving power from a remote power transmitter located outside of the body. The received power may be used to recharge a rechargeable power source of the implantable medical device. The inductive coil may also be used for inductive communication with a remote device. The use of an inductive coil may give the implantable medical device an effective longer useful life expectancy and/or may not require as much battery space thereby permitting a significantly smaller device size. A smaller device size may make the device more easily deliverable and implantable in the body, allow the device to be implantable in smaller and more confined spaces in the body, and/or may make the device less expensive to produce.

[0008] The relatively small device size of some implantable medical devices can impose significant constraints on the size of the inductive coil. A smaller inductive coil may reduce the peak power and efficiency of the inductive energy transfer to the coil because of a reduced coupling and a reduced Q factor of the coil. What would be desirable is a relatively small implantable medical device with an inductive coil that has an increased coupling factor and/or an increased Q factor for better inductive energy transfer to recharge a rechargeable power source and/or for better communication with a remote device.

SUMMARY

[0009] The disclosure relates generally to implantable medical devices, and more particularly to implantable medical devices that have an inductive coil for wireless communication and/or power transfer. While a leadless cardiac pacemaker is used as an example implantable medical device, it should be understood that the disclosure can be applied to any suitable implantable medical device including, for example, neuro-stimulators, diagnostic devices including those that do not deliver therapy, and/or any other suitable implantable medical device as desired.

[0010] In some cases, the disclosure pertains to an implantable medical devices (IMD) such as leadless cardiac pacemakers (LCP) that include a rechargeable power source such as a rechargeable battery, a rechargeable capacitor or a rechargeable supercapacitor. In one example, a housing of the IMD may include or may support a magnetically permeable material. The IMD may include a receiving coil disposed around a portion of the housing and the magnetically permeable material may be configured to operate as a flux concentrator for concentrating non-radiative near-field energy through the receiving coil. The near-field energy may then be captured and converted into electrical energy that may be used to recharge the rechargeable power source. Accordingly, since the rechargeable power source does not have to maintain sufficient energy stores in a single charge for the entire expected lifetime of the IMD, the power source itself and thus the IMD may be made smaller while still meeting device longevity requirements. In some cases, the receiving coil may be used for communication with a remotely located device instead of, or in addition to, recharging the rechargeable power source.

[0011] In another example of the disclosure, an implantable medical device (IMD) may be configured to be implanted within a patient and may include a housing that may be configured for trans-catheter deployment and may include a magnetically permeable material with a relative permeability (μ_r) of greater than 10. A plurality of electrodes may be exposed external to the housing. A therapeutic circuitry may be disposed within the housing and may be operatively coupled to the plurality of electrodes and may be configured to sense one or more signals via one or more of the plurality of electrodes and/or to stimulate tissue via one or more of the plurality of electrodes. A rechargeable power source may be disposed within the housing and may be configured to power the therapeutic circuitry. A receiving coil may be disposed around the portion of the housing that includes the magnetically permeable material and the magnetically permeable material of the housing may be configured to operate as a flux concentrator for concentrating non-

radiative near-field energy through the receiving coil. A charging circuitry may be disposed within the housing and may be operatively coupled with the receiving coil and the rechargeable power source and may be configured to use the non-radiative near-field energy received via the receiving coil to charge the rechargeable power source.

[0012] Alternatively or additionally to any of the embodiments above, the IMD may further include one or more feedthroughs that may extend from outside of the housing to inside of the housing and may electrically connect the receiving coil and the charging circuitry.

[0013] Alternatively or additionally to any of the embodiments above, the IMD may further include one or more feedthroughs that may extend from outside of the housing to inside of the housing and may electrically connect one or more of the plurality of electrodes to the therapeutic circuitry.

[0014] Alternatively or additionally to any of the embodiments above, the IMD may further include a protective layer over the receiving coil.

[0015] Alternatively or additionally to any of the embodiments above, the protective layer may provide a hermetically seal over the receiving coil.

[0016] Alternatively or additionally to any of the embodiments above, the protective layer may comprise glass.

[0017] Alternatively or additionally to any of the embodiments above, the magnetically permeable material may have a conductance (σ) of less than 1E-4 ohm^{-1} cm^{-1}.

[0018] Alternatively or additionally to any of the embodiments above, the magnetically permeable material may comprise a ferrite.

[0019] Alternatively or additionally to any of the embodiments above, the magnetically permeable material may comprise an alloy.

[0020] Alternatively or additionally to any of the embodiments above, the alloy may comprise a mu-metal.

[0021] Alternatively or additionally to any of the embodiments above, the housing may comprise a polymer base with the magnetically permeable material may be secured relative to the polymer base.

[0022] Alternatively or additionally to any of the embodiments above, the portion of the housing may itself be formed from the magnetically permeable material.

[0023] Alternatively or additionally to any of the embodiments above, the portion of the

housing may comprise a non-magnetic material, have a tubular form, and the magnetically permeable material may comprise formed strips embedded in the portion of the housing. Alternatively or additionally to any of the embodiments above, the receiving coil may be printed on the portion of the housing.

[0024] Alternatively or additionally to any of the embodiments above, the rechargeable power source disposed within the housing may comprise a magnetically permeable material with a relative permeability (μ_r) that may be greater than 10.

[0025] In another example of the disclosure, an implantable medical device (IMD) may be configured to be implanted within a patient and include a housing that may be configured for trans-catheter deployment and may have a tubular shaped housing portion that may comprise a magnetically permeable material with a relative permeability (μ_r) that may be greater than 10. A receiving coil may be disposed around at least a portion of the tubular shaped housing portion and the magnetically permeable material of the tubular shaped housing portion may be configured to operate as a flux concentrator for concentrating non-radiative near-field energy through the receiving coil. Operational circuitry may be disposed within the housing. A rechargeable power source may be disposed within the housing and may be configured to power the operational circuitry. Charging circuitry may be operatively coupled with the receiving coil and the rechargeable power source and may be configured to use the non-radiative near-field energy received via the receiving coil to charge the rechargeable power source.

[0026] Alternatively or additionally to any of the embodiments above, the IMD may further include one or more feedthroughs that may extend from outside of the housing to inside of the housing and may connect the receiving coil and the charging circuitry.

[0027] Alternatively or additionally to any of the embodiments above, the receiving coil may be hermetically sealed by a protective layer.

[0028] In another example of the disclosure, an implantable medical device (IMD) may be configured to be implanted within a patient and include a housing may be configured for trans-catheter deployment and may comprise a magnetically permeable material with a relative permeability (μ_r) that may be greater than 10. A coil may be disposed around at least a portion of the magnetically permeable material of the housing and the magnetically permeable material may be configured to operate as a flux concentrator for concentrating non-radiative near-field energy through the coil. A communication circuitry may be disposed within the housing and may be

operatively coupled to the coil to transmit messages to an external receiver via the coil by driving a communication signal onto the coil. A rechargeable power source may be disposed within the housing and configured to power the communication circuitry. Charging circuitry may be operatively coupled with the coil and the rechargeable power source and may be configured to use non-radiative near-field energy transmitted by an external power source and received via the coil to charge the rechargeable power source.

[0029] Alternatively or additionally to any of the embodiments above, the IMD may be a leadless cardiac pacemaker.

BRIEF DESCRIPTION OF THE FIGURES

[0030] The disclosure may be more completely understood in consideration of the following description in connection with the accompanying drawings, in which:

[0031] Figure 1 is a schematic block diagram of an illustrative LCP in accordance with an example of the disclosure;

[0032] Figure 2 is a schematic block diagram of another illustrative medical device that may be used in conjunction with the LCP of Figure 1;

[0033] Figure 3 is a schematic diagram of an exemplary medical system that includes multiple LCPs and/or other devices in communication with one another;

[0034] Figure 4 is a schematic diagram of a system including an LCP and another medical device, in accordance with an example of the disclosure;

[0035] Figure 5 is a side view of an illustrative implantable leadless cardiac device;

[0036] Figure 6 is a schematic diagram of a patient with a rechargeable implantable medical device system;

[0037] Figure 7 is a schematic of an illustrative circuit for a coupled inductor system;

[0038] Figures 8A-8B provide an illustrative, but not limiting example of a near-field energy transmission system;

[0039] Figure 9 provides an illustrative, but non-limiting example of at least some of the components within an IMD, according to an example of the disclosure;

[0040] Figure 10 provides another illustrative, but non-limiting example of at least some of the components within an IMD, according to an example of the disclosure;

[0041] Figure 11 provides another illustrative, but non-limiting example of at least some of the components within an IMD, according to an example of the disclosure;

[0042] Figure 12A is a schematic partial cross-sectional view of an illustrative IMD according to another example of the disclosure;

[0043] Figure 12B is a schematic view of the IMD of Figure 12A implanted within a patient and a transmitter coil transmitting non-radiative near-field energy to the receiving coil of the IMD;

[0044] Figure 13A is a schematic partial cross-sectional view of an illustrative IMD according to another example of the disclosure; and

[0045] Figure 13B is a schematic view of the IMD of Figure 13A implanted within a patient and a transmitter coil transmitting non-radiative near-field energy to the receiving coil of the IMD.

[0046] Figure 14 is a schematic view of formed strips of a magnetically permeable material embedded in a portion of a housing.

[0047] While the disclosure is amenable to various modifications and alternative forms, specifics thereof have been shown by way of example in the drawings and will be described in detail. It should be understood, however, that the intention is not to limit the disclosure to the particular embodiments described. On the contrary, the intention is to cover all modifications, equivalents, and alternatives falling within the spirit and scope of the disclosure.

DESCRIPTION

[0048] For the following defined terms, these definitions shall be applied, unless a different definition is given in the claims or elsewhere in this specification.

[0049] All numeric values are herein assumed to be modified by the term "about," whether or not explicitly indicated. The term "about" generally refers to a range of numbers that one of skill in the art would consider equivalent to the recited value (i.e., having the same function or result). In many instances, the terms "about" may include numbers that are rounded to the nearest significant figure.

[0050] For the following defined terms, these definitions shall be applied, unless a different definition is given in the claims or elsewhere in this specification.

[0051] All numeric values are herein assumed to be modified by the term "about," whether or not explicitly indicated. The term "about" generally refers to a range of numbers that one of skill in the art would consider equivalent to the recited value (i.e., having the same function or result).

In many instances, the terms "about" may include numbers that are rounded to the nearest significant figure.

[0052] The recitation of numerical ranges by endpoints includes all numbers within that range (e.g. 1 to 5 includes 1, 1.5, 2, 2.75, 3, 3.80, 4, and 5).

[0053] As used in this specification and the appended claims, the singular forms "a", "an", and "the" include plural referents unless the content clearly dictates otherwise. As used in this specification and the appended claims, the term "or" is generally employed in its sense including "and/or" unless the content clearly dictates otherwise.

[0054] It is noted that references in the specification to "an embodiment", "some embodiments", "other embodiments", etc., indicate that the embodiment described may include one or more particular features, structures, and/or characteristics. However, such recitations do not necessarily mean that all embodiments include the particular features, structures, and/or characteristics. Additionally, when particular features, structures, and/or characteristics are described in connection with one embodiment, it should be understood that such features, structures, and/or characteristics may also be used connection with other embodiments whether or not explicitly described unless clearly stated to the contrary.

[0055] The following description should be read with reference to the drawings in which similar structures in different drawings are numbered the same. The drawings, which are not necessarily to scale, depict illustrative embodiments and are not intended to limit the scope of the disclosure.

[0056] Figure 1 depicts an illustrative leadless cardiac pacemaker (LCP) that may be implanted into a patient and may operate to deliver appropriate therapy to the heart, such as to deliver anti-tachycardia pacing (ATP) therapy, cardiac resynchronization therapy (CRT), bradycardia therapy, and/or the like. As can be seen in Figure 1, the LCP 100 may be a compact device with all components housed within the or directly on a housing 120. In some cases, the LCP 100 may be considered as being an example of an implantable medical device (IMD). In the example shown in Figure 1, the LCP 100 may include a communication module 102, a pulse generator module 104, an electrical sensing module 106, a mechanical sensing module 108, a processing module 110, a battery 112, and an electrode arrangement 114. The LCP 100 may include more or less modules, depending on the application.

[0057] The communication module 102 may be configured to communicate with devices

such as sensors, other medical devices such as an SICD, and/or the like, that are located externally to the LCP 100. Such devices may be located either external or internal to the patient's body. Irrespective of the location, external devices (i.e. external to the LCP 100 but not necessarily external to the patient's body) can communicate with the LCP 100 via communication module 102 to accomplish one or more desired functions. For example, the LCP 100 may communicate information, such as sensed electrical signals, data, instructions, messages, R-wave detection markers, etc., to an external medical device (e.g. SICD and/or programmer) through the communication module 102. The external medical device may use the communicated signals, data, instructions, messages, R-wave detection markers, etc., to perform various functions, such as determining occurrences of arrhythmias, delivering electrical stimulation therapy, storing received data, and/or performing any other suitable function. The LCP 100 may additionally receive information such as signals, data, instructions and/or messages from the external medical device through the communication module 102, and the LCP 100 may use the received signals, data, instructions and/or messages to perform various functions, such as determining occurrences of arrhythmias, delivering electrical stimulation therapy, storing received data, and/or performing any other suitable function. The communication module 102 may be configured to use one or more methods for communicating with external devices. For example, the communication module 102 may communicate via radiofrequency (RF) signals, inductive coupling, optical signals, acoustic signals, conducted communication signals, and/or any other signals suitable for communication.

[0058] In the example shown in Figure 1, the pulse generator module 104 may be electrically connected to the electrodes 114. In some examples, the LCP 100 may additionally include electrodes 114'. In such examples, the pulse generator 104 may also be electrically connected to the electrodes 114'. The pulse generator module 104 may be configured to generate electrical stimulation signals. For example, the pulse generator module 104 may generate and deliver electrical stimulation signals by using energy stored in the battery 112 within the LCP 100 and deliver the generated electrical stimulation signals via the electrodes 114 and/or 114'. Alternatively, or additionally, the pulse generator 104 may include one or more capacitors, and the pulse generator 104 may charge the one or more capacitors by drawing energy from the battery 112. The pulse generator 104 may then use the energy of the one or more capacitors to deliver the generated electrical stimulation signals via the electrodes 114 and/or 114'. In at least some examples, the pulse generator 104 of the LCP 100 may include switching circuitry to selectively

connect one or more of the electrodes 114 and/or 114' to the pulse generator 104 in order to select which of the electrodes 114/114' (and/or other electrodes) the pulse generator 104 delivers the electrical stimulation therapy. The pulse generator module 104 may generate and deliver electrical stimulation signals with particular features or in particular sequences in order to provide one or multiple of a number of different stimulation therapies. For example, the pulse generator module 104 may be configured to generate electrical stimulation signals to provide electrical stimulation therapy to combat bradycardia, tachycardia, cardiac synchronization, bradycardia arrhythmias, tachycardia arrhythmias, fibrillation arrhythmias, cardiac synchronization arrhythmias and/or to produce any other suitable electrical stimulation therapy. Some more common electrical stimulation therapies include anti-tachycardia pacing (ATP) therapy, cardiac resynchronization therapy (CRT), and cardioversion/defibrillation therapy. In some cases, the pulse generator 104 may provide a controllable pulse energy. In some cases, the pulse generator 104 may allow the controller to control the pulse voltage, pulse width, pulse shape or morphology, and/or any other suitable pulse characteristic.

[0059] In some examples, the LCP 100 may include an electrical sensing module 106, and in some cases, a mechanical sensing module 108. The electrical sensing module 106 may be configured to sense the cardiac electrical activity of the heart. For example, the electrical sensing module 106 may be connected to the electrodes 114/114', and the electrical sensing module 106 may be configured to receive cardiac electrical signals conducted through the electrodes 114/114'. The cardiac electrical signals may represent local information from the chamber in which the LCP 100 is implanted. For instance, if the LCP 100 is implanted within a ventricle of the heart (e.g. RV, LV), cardiac electrical signals sensed by the LCP 100 through the electrodes 114/114' may represent ventricular cardiac electrical signals. In some cases, the LCP 100 may be configured to detect cardiac electrical signals from other chambers (e.g. far field), such as the P-wave from the atrium.

[0060] The mechanical sensing module 108 may include one or more sensors, such as an accelerometer, a pressure sensor, a heart sound sensor, a blood-oxygen sensor, a chemical sensor, a temperature sensor, a flow sensor and/or any other suitable sensors that are configured to measure one or more mechanical/chemical parameters of the patient. Both the electrical sensing module 106 and the mechanical sensing module 108 may be connected to a processing module 110, which may provide signals representative of the sensed mechanical parameters. Although described with

respect to Figure 1 as separate sensing modules, in some cases, the electrical sensing module 106 and the mechanical sensing module 108 may be combined into a single sensing module, as desired.

[0061] The electrodes 114/114' can be secured relative to the housing 120 but exposed to the tissue and/or blood surrounding the LCP 100. In some cases, the electrodes 114 may be generally disposed on either end of the LCP 100 and may be in electrical communication with one or more of the modules 102, 104, 106, 108, and 110. The electrodes 114/114' may be supported by the housing 120, although in some examples, the electrodes 114/114' may be connected to the housing 120 through short connecting wires such that the electrodes 114/114' are not directly secured relative to the housing 120. In examples where the LCP 100 includes one or more electrodes 114', the electrodes 114' may in some cases be disposed on the sides of the LCP 100, which may increase the number of electrodes by which the LCP 100 may sense cardiac electrical activity, deliver electrical stimulation and/or communicate with an external medical device. The electrodes 114/114' can be made up of one or more biocompatible conductive materials such as various metals or alloys that are known to be safe for implantation within a human body. In some instances, the electrodes 114/114' connected to the LCP 100 may have an insulative portion that electrically isolates the electrodes 114/114' from adjacent electrodes, the housing 120, and/or other parts of the LCP 100. In some cases, one or more of the electrodes 114/114' may be provided on a tail (not shown) that extends away from the housing 120.

[0062] The processing module 110 can be configured to control the operation of the LCP 100. For example, the processing module 110 may be configured to receive electrical signals from the electrical sensing module 106 and/or the mechanical sensing module 108. Based on the received signals, the processing module 110 may determine, for example, abnormalities in the operation of the heart H. Based on any determined abnormalities, the processing module 110 may control the pulse generator module 104 to generate and deliver electrical stimulation in accordance with one or more therapies to treat the determined abnormalities. The processing module 110 may further receive information from the communication module 102. In some examples, the processing module 110 may use such received information to help determine whether an abnormality is occurring, determine a type of abnormality, and/or to take particular action in response to the information. The processing module 110 may additionally control the communication module 102 to send/receive information to/from other devices.

[0063] In some examples, the processing module 110 may include a pre-programmed chip,

such as a very-large-scale integration (VLSI) chip and/or an application specific integrated circuit (ASIC). In such embodiments, the chip may be pre-programmed with control logic in order to control the operation of the LCP 100. By using a pre-programmed chip, the processing module 110 may use less power than other programmable circuits (e.g. general purpose programmable microprocessors) while still being able to maintain basic functionality, thereby potentially increasing the battery life of the LCP 100. In other examples, the processing module 110 may include a programmable microprocessor. Such a programmable microprocessor may allow a user to modify the control logic of the LCP 100 even after implantation, thereby allowing for greater flexibility of the LCP 100 than when using a pre-programmed ASIC. In some examples, the processing module 110 may further include a memory, and the processing module 110 may store information on and read information from the memory. In other examples, the LCP 100 may include a separate memory (not shown) that is in communication with the processing module 110, such that the processing module 110 may read and write information to and from the separate memory.

[0064] The battery 112 may provide power to the LCP 100 for its operations. Because the LCP 100 is an implantable device, access to the LCP 100 may be limited after implantation. Accordingly, it is desirable to have sufficient battery capacity to deliver therapy over a period of treatment such as days, weeks, months, years or even decades. In some instances, the battery 112 may a rechargeable battery, which may help increase the useable lifespan of the LCP 100. In other examples, the battery 112 may be some other type of power source, as desired. In some cases, the battery 112 may be a primary (non-rechargeable) battery (e.g., FeS_2). In some cases, the battery 112 may not be battery at all, but rather may be super capacitor or other charge storage device. In some cases, the LCP 100 may include a receiver coil for receiving near-field energy. Charging circuitry may be operatively coupled with the receiving coil and the battery 112, and may be configured to use the non-radiative near-field energy received via the receiving coil to charge the battery 112.

[0065] To implant the LCP 100 inside a patient's body, an operator (e.g., a physician, clinician, etc.), may fix the LCP 100 to the cardiac tissue of the patient's heart. To facilitate fixation, the LCP 100 may include one or more anchors 116. The anchor 116 may include any one of a number of fixation or anchoring mechanisms. For example, the anchor 116 may include one or more pins, staples, threads, screws, helix, tines, and/or the like. In some examples, although

not shown, the anchor 116 may include threads on its external surface that may run along at least a partial length of the anchor 116. The threads may provide friction between the cardiac tissue and the anchor to help fix the anchor 116 within the cardiac tissue. In other examples, the anchor 116 may include other structures such as barbs, spikes, or the like to facilitate engagement with the surrounding cardiac tissue.

[0066] Figure 2 depicts an example of another or second medical device (MD) 200, which may be used in conjunction with the LCP 100 (Figure 1) in order to detect and/or treat cardiac abnormalities. In some cases, the MD 200 may be considered as an example of the IMD and/or the LCP. In the example shown, the MD 200 may include a communication module 202, a pulse generator module 204, an electrical sensing module 206, a mechanical sensing module 208, a processing module 210, and a battery 218. Each of these modules may be similar to the modules 102, 104, 106, 108, and 110 of LCP 100. Additionally, the battery 218 may be similar to the battery 112 of the LCP 100. In some examples, however, the MD 200 may have a larger volume within the housing 220. In such examples, the MD 200 may include a larger battery and/or a larger processing module 210 capable of handling more complex operations than the processing module 110 of the LCP 100.

[0067] While it is contemplated that the MD 200 may be another leadless device such as shown in Figure 1, in some instances the MD 200 may include leads such as leads 212. The leads 212 may include electrical wires that conduct electrical signals between the electrodes 214 and one or more modules located within the housing 220. In some cases, the leads 212 may be connected to and extend away from the housing 220 of the MD 200. In some examples, the leads 212 are implanted on, within, or adjacent to a heart of a patient. The leads 212 may contain one or more electrodes 214 positioned at various locations on the leads 212, and in some cases at various distances from the housing 220. Some leads 212 may only include a single electrode 214, while other leads 212 may include multiple electrodes 214. Generally, the electrodes 214 are positioned on the leads 212 such that when the leads 212 are implanted within the patient, one or more of the electrodes 214 are positioned to perform a desired function. In some cases, the one or more of the electrodes 214 may be in contact with the patient's cardiac tissue. In some cases, the one or more of the electrodes 214 may be positioned subcutaneously and outside of the patient's heart. In some cases, the electrodes 214 may conduct intrinsically generated electrical signals to the leads 212, e.g. signals representative of intrinsic cardiac electrical activity. The leads 212 may,

in turn, conduct the received electrical signals to one or more of the modules 202, 204, 206, and 208 of the MD 200. In some cases, the MD 200 may generate electrical stimulation signals, and the leads 212 may conduct the generated electrical stimulation signals to the electrodes 214. The electrodes 214 may then conduct the electrical signals and delivery the signals to the patient's heart (either directly or indirectly).

[0068] The mechanical sensing module 208, as with the mechanical sensing module 108, may contain or be electrically connected to one or more sensors, such as accelerometers, acoustic sensors, blood pressure sensors, heart sound sensors, blood-oxygen sensors, and/or other sensors which are configured to measure one or more mechanical/chemical parameters of the heart and/or patient. In some examples, one or more of the sensors may be located on the leads 212, but this is not required. In some examples, one or more of the sensors may be located in the housing 220.

[0069] While not required, in some examples, the MD 200 may be an implantable medical device. In such examples, the housing 220 of the MD 200 may be implanted in, for example, a transthoracic region of the patient. The housing 220 may generally include any of a number of known materials that are safe for implantation in a human body and may, when implanted, hermetically seal the various components of the MD 200 from fluids and tissues of the patient's body.

[0070] In some cases, the MD 200 may be an implantable cardiac pacemaker (ICP). In this example, the MD 200 may have one or more leads, for example the leads 212, which are implanted on or within the patient's heart. The one or more leads 212 may include one or more electrodes 214 that are in contact with cardiac tissue and/or blood of the patient's heart. The MD 200 may be configured to sense intrinsically generated cardiac electrical signals and determine, for example, one or more cardiac arrhythmias based on analysis of the sensed signals. The MD 200 may be configured to deliver CRT, ATP therapy, bradycardia therapy, and/or other therapy types via the leads 212 implanted within the heart. In some examples, the MD 200 may additionally be configured provide defibrillation therapy.

[0071] In some instances, the MD 200 may be an implantable cardioverter-defibrillator (ICD). In such examples, the MD 200 may include one or more leads implanted within a patient's heart. The MD 200 may also be configured to sense cardiac electrical signals, determine occurrences of tachyarrhythmias based on the sensed signals, and may be configured to deliver defibrillation therapy in response to determining an occurrence of a tachyarrhythmia. In other

examples, the MD 200 may be a subcutaneous implantable cardioverter-defibrillator (S-ICD). In examples where the MD 200 is an S-ICD, one of the leads 212 may be a subcutaneously implanted lead. In at least some examples where the MD 200 is an S-ICD, the MD 200 may include only a single lead which is implanted subcutaneously, but this is not required. In some instances, the lead(s) may have one or more electrodes that are placed subcutaneously and outside of the chest cavity. In other examples, the lead(s) may have one or more electrodes that are placed inside of the chest cavity, such as just interior of the sternum but outside of the heart H.

[0072] In some examples, the MD 200 may not be an implantable medical device. Rather, the MD 200 may be a device external to the patient's body, and may include skin-electrodes that are placed on a patient's body. In such examples, the MD 200 may be able to sense surface electrical signals (e.g. cardiac electrical signals that are generated by the heart or electrical signals generated by a device implanted within a patient's body and conducted through the body to the skin). In such examples, the MD 200 may be configured to deliver various types of electrical stimulation therapy, including, for example, defibrillation therapy.

[0073] In some cases, the MD 200 may be external to the patient's body and may include a transmit coil that is configured to transmit near-field energy to an implanted IMD. The MD 200 may also include an output driver for driving the transmit coil at a transmit frequency and a transmit amplitude. The transmit frequency and/or transmit amplitude may be tuned, sometimes actively tuned, so as to deliver an acceptable transmit power to a receive coil of the implanted IMD. The transmit power may be used to recharge a power source of the implanted IMD.

[0074] Figure 3 illustrates an example of a medical device system and a communication pathway through which multiple medical devices 302, 304, 306, and/or 310 may communicate. In the example shown, the medical device system 300 may include LCPs 302 and 304, external medical device 306, and other sensors/devices 310. The external device 306 may be any of the devices described previously with respect to the MD 200. Other sensors/devices 310 may also be any of the devices described previously with respect to the MD 200. In some instances, other sensors/devices 310 may include a sensor, such as an accelerometer, an acoustic sensor, a blood pressure sensor, or the like. In some cases, other sensors/devices 310 may include an external programmer device that may be used to program one or more devices of the system 300.

[0075] Various devices of the system 300 may communicate via communication pathway 308. For example, the LCPs 302 and/or 304 may sense intrinsic cardiac electrical signals and may

communicate such signals to one or more other devices 302/304, 306, and 310 of the system 300 via communication pathway 308. In one example, one or more of the devices 302/304 may receive such signals and, based on the received signals, determine an occurrence of an arrhythmia. In some cases, the device or devices 302/304 may communicate such determinations to one or more other devices 306 and 310 of the system 300. In some cases, one or more of the devices 302/304, 306, and 310 of the system 300 may take action based on the communicated determination of an arrhythmia, such as by delivering a suitable electrical stimulation to the heart of the patient. It is contemplated that the communication pathway 308 may communicate using RF signals, inductive coupling, optical signals, acoustic signals, or any other signals suitable for communication. Additionally, in at least some examples, communication pathway 308 may include multiple signal types. For instance, other sensors/device 310 may communicate with the external device 306 using a first signal type (e.g. RF communication) but communicate with the LCPs 302/304 using a second signal type (e.g. conducted communication). Further, in some examples, communication between devices may be limited. For instance, as described above, in some examples, the LCPs 302/304 may communicate with the external device 306 only through other sensors/devices 310, where the LCPs 302/304 send signals to other sensors/devices 310, and other sensors/devices 310 relay the received signals to the external device 306.

[0076] In some cases, the communication pathway 308 may include conducted communication. Accordingly, devices of the system 300 may have components that allow for such conducted communication. For instance, the devices of system 300 may be configured to transmit conducted communication signals (e.g. current and/or voltage pulses) into the patient's body via one or more electrodes of a transmitting device, and may receive the conducted communication signals (e.g. pulses) via one or more electrodes of a receiving device. The patient's body may "conduct" the conducted communication signals (e.g. pulses) from the one or more electrodes of the transmitting device to the electrodes of the receiving device in the system 300. In such examples, the delivered conducted communication signals (e.g. pulses) may differ from pacing or other therapy signals. For example, the devices of the system 300 may deliver electrical communication pulses at an amplitude /pulse width that is sub-capture threshold to the heart. Although, in some cases, the amplitude/pulse width of the delivered electrical communication pulses may be above the capture threshold of the heart, but may be delivered during a blanking period of the heart (e.g. refractory period) and/or may be incorporated in or modulated onto a

pacing pulse, if desired.

[0077] Delivered electrical communication pulses may be modulated in any suitable manner to encode communicated information. In some cases, the communication pulses may be pulse width modulated or amplitude modulated. Alternatively, or in addition, the time between pulses may be modulated to encode desired information. In some cases, conducted communication pulses may be voltage pulses, current pulses, biphasic voltage pulses, biphasic current pulses, or any other suitable electrical pulse as desired. Alternatively, or in addition, the communication pathway 308 may include radiofrequency (RF) communication, inductive communication, optical communication, acoustic communication and/or any other suitable communication, as desired.

[0078] Figure 4 shows an illustrative medical device system. In Figure 4, an LCP 402 is shown fixed to the interior of the left ventricle of the heart 410, and a pulse generator 406 is shown coupled to a lead 412 having one or more electrodes 408a-408c. In some cases, the pulse generator 406 may be part of a subcutaneous implantable cardioverter-defibrillator (S-ICD), and the one or more electrodes 408a-408c may be positioned subcutaneously. In some cases, the one or more electrodes 408a-408c may be placed inside of the chest cavity but outside of the heart, such as just interior of the sternum.

[0079] In some cases, the LCP 402 may communicate with the subcutaneous implantable cardioverter-defibrillator (S-ICD). In some cases, the lead 412 and/or pulse generator 406 may include an accelerometer 414 that may, for example, be configured to sense vibrations that may be indicative of heart sounds.

[0080] In some cases, the LCP 402 may be in the right ventricle, right atrium, left ventricle or left atrium of the heart, as desired. In some cases, more than one LCP 402 may be implanted. For example, one LCP may be implanted in the right ventricle and another may be implanted in the right atrium. In another example, one LCP may be implanted in the right ventricle and another may be implanted in the left ventricle. In yet another example, one LCP may be implanted in each of the chambers of the heart.

[0081] Figure 5 is a side view of an illustrative implantable leadless cardiac pacemaker (LCP) 610. The LCP 610 may be similar in form and function to the LCP 100 described above. The LCP 610 may include any of the modules and/or structural features described above with respect to the LCP 100 described above. The LCP 610 may include a shell or housing 612 having a proximal end 614 and a distal end 616. The illustrative LCP 610 includes a first electrode 620

secured relative to the housing 612 and positioned adjacent to the distal end 616 of the housing 612 and a second electrode 622 secured relative to the housing 612 and positioned adjacent to the proximal end 614 of the housing 612. In some cases, the housing 612 may include a conductive material and may be insulated along a portion of its length. A section along the proximal end 614 may be free of insulation so as to define the second electrode 622. The electrodes 620, 622 may be sensing and/or pacing electrodes to provide electro-therapy and/or sensing capabilities. The first electrode 620 may be capable of being positioned against or may otherwise contact the cardiac tissue of the heart while the second electrode 622 may be spaced away from the first electrode 620. The first and/or second electrodes 620, 622 may be exposed to the environment outside the housing 612 (e.g. to blood and/or tissue).

[0082] In some cases, the LCP 610 may include a pulse generator (e.g., electrical circuitry) and a power source (e.g., a battery) within the housing 612 to provide electrical signals to the electrodes 620, 622 to control the pacing/sensing electrodes 620, 622. While not explicitly shown, the LCP 610 may also include, a communications module, an electrical sensing module, a mechanical sensing module, and/or a processing module, and the associated circuitry, similar in form and function to the modules 102, 106, 108, 110 described above. The various modules and electrical circuitry may be disposed within the housing 612. Electrical connections between the pulse generator and the electrodes 620, 622 may allow electrical stimulation to heart tissue and/or sense a physiological condition.

[0083] In the example shown, the LCP 610 includes a fixation mechanism 624 proximate the distal end 616 of the housing 612. The fixation mechanism 624 is configured to attach the LCP 610 to a wall of the heart H, or otherwise anchor the LCP 610 to the anatomy of the patient. In some instances, the fixation mechanism 624 may include one or more, or a plurality of hooks or tines 626 anchored into the cardiac tissue of the heart H to attach the LCP 610 to a tissue wall. In other instances, the fixation mechanism 624 may include one or more, or a plurality of passive tines, configured to entangle with trabeculae within the chamber of the heart H and/or a helical fixation anchor configured to be screwed into a tissue wall to anchor the LCP 610 to the heart H. These are just examples.

[0084] The LCP 610 may further include a docking member 630 proximate the proximal end 614 of the housing 612. The docking member 630 may be configured to facilitate delivery and/or retrieval of the LCP 610. For example, the docking member 630 may extend from the

proximal end 614 of the housing 612 along a longitudinal axis of the housing 612. The docking member 630 may include a head portion 632 and a neck portion 634 extending between the housing 612 and the head portion 632. The head portion 632 may be an enlarged portion relative to the neck portion 634. For example, the head portion 632 may have a radial dimension from the longitudinal axis of the LCP 610 that is greater than a radial dimension of the neck portion 634 from the longitudinal axis of the LCP 610. In some cases, the docking member 630 may further include a tether retention structure 636 extending from or recessed within the head portion 632. The tether retention structure 636 may define an opening 638 configured to receive a tether or other anchoring mechanism therethrough. While the retention structure 636 is shown as having a generally "U-shaped" configuration, the retention structure 636 may take any shape that provides an enclosed perimeter surrounding the opening 638 such that a tether may be securably and releasably passed (e.g. looped) through the opening 638. In some cases, the retention structure 636 may extend though the head portion 632, along the neck portion 634, and to or into the proximal end 614 of the housing 612. The docking member 630 may be configured to facilitate delivery of the LCP 610 to the intracardiac site and/or retrieval of the LCP 610 from the intracardiac site. While this describes one example docking member 630, it is contemplated that the docking member 630, when provided, can have any suitable configuration.

[0085] It is contemplated that the LCP 610 may include one or more pressure sensors 640 coupled to or formed within the housing 612 such that the pressure sensor(s) is exposed to the environment outside the housing 612 to measure blood pressure within the heart. For example, if the LCP 610 is placed in the left ventricle, the pressure sensor(s) 640 may measure the pressure within the left ventricle. If the LCP 610 is placed in another portion of the heart (such as one of the atriums or the right ventricle), the pressures sensor(s) may measure the pressure within that portion of the heart. The pressure sensor(s) 640 may include a MEMS device, such as a MEMS device with a pressure diaphragm and piezoresistors on the diaphragm, a piezoelectric sensor, a capacitor-Micro-machined Ultrasonic Transducer (cMUT), a condenser, a micro-monometer, or any other suitable sensor adapted for measuring cardiac pressure. The pressures sensor(s) 640 may be part of a mechanical sensing module described herein. It is contemplated that the pressure measurements obtained from the pressures sensor(s) 640 may be used to generate a pressure curve over cardiac cycles. The pressure readings may be taken in combination with impedance measurements (e.g. the impedance between electrodes 620 and 622) to generate a pressure-

impedance loop for one or more cardiac cycles as will be described in more detail below. The impedance may be a surrogate for chamber volume, and thus the pressure-impedance loop may be representative for a pressure-volume loop for the heart H.

[0086] In some embodiments, the LCP 610 may be configured to measure impedance between the electrodes 620, 622. More generally, the impedance may be measured between other electrode pairs, such as the additional electrodes 114' described above. In some cases, the impedance may be measure between two spaced LCP's, such as two LCP's implanted within the same chamber (e.g. LV) of the heart H, or two LCP's implanted in different chambers of the heart H (e.g. RV and LV). The processing module of the LCP 610 and/or external support devices may derive a measure of cardiac volume from intracardiac impedance measurements made between the electrodes 620, 622 (or other electrodes). Primarily due to the difference in the resistivity of blood and the resistivity of the cardiac tissue of the heart H, the impedance measurement may vary during a cardiac cycle as the volume of blood (and thus the volume of the chamber) surrounding the LCP changes. In some cases, the measure of cardiac volume may be a relative measure, rather than an actual measure. In some cases, the intracardiac impedance may be correlated to an actual measure of cardiac volume via a calibration process, sometimes performed during implantation of the LCP(s). During the calibration process, the actual cardiac volume may be determined using fluoroscopy or the like, and the measured impedance may be correlated to the actual cardiac volume.

[0087] In some cases, the LCP 610 may be provided with energy delivery circuitry operatively coupled to the first electrode 620 and the second electrode 622 for causing a current to flow between the first electrode 620 and the second electrode 622 in order to determine the impedance between the two electrodes 620, 622 (or other electrode pair). It is contemplated that the energy delivery circuitry may also be configured to deliver pacing pulses via the first and/or second electrodes 620, 622. The LCP 610 may further include detection circuitry operatively coupled to the first electrode 620 and the second electrode 622 for detecting an electrical signal received between the first electrode 620 and the second electrode 622. In some instances, the detection circuitry may be configured to detect cardiac signals received between the first electrode 620 and the second electrode 622.

[0088] When the energy delivery circuitry delivers a current between the first electrode 620 and the second electrode 622, the detection circuitry may measure a resulting voltage between the

first electrode 620 and the second electrode 622 (or between a third and fourth electrode separate from the first electrode 620 and the second electrode 622, not shown) to determine the impedance. When the energy delivery circuitry delivers a voltage between the first electrode 620 and the second electrode 622, the detection circuitry may measure a resulting current between the first electrode 620 and the second electrode 622 (or between a third and fourth electrode separate from the first electrode 620 and the second electrode 622) to determine the impedance.

[0089] In some cases, the housing 612 may include or may support a magnetically permeable material. A receiving coil (not explicitly shown in Figure 5) may be disposed around a portion of the housing 612, and the magnetically permeable material may be configured to operate as a flux concentrator for concentrating non-radiative near-field energy emitted by a remote transmitter through the receiving coil. The near-field energy may be captured by the receiving coil and converted into electrical energy that may be used to recharge a rechargeable power source within the housing 612. Accordingly, since the rechargeable power source does not have to maintain sufficient energy stores in a single charge for the entire expected lifetime of the LCP 610, the power source itself and thus the LCP 610 may be made smaller while still meeting device longevity requirements. In some cases, the receiving coil may be used for communication with a remotely located device instead of, or in addition to, recharging the rechargeable power source.

[0090] Figure 6 provides a highly schematic illustration of a patient 700 having an implantable device (IMD) 702 implanted within the patient 700. While the IMD 702 is shown as being in or near the patient's chest, it will be appreciated that this is merely illustrative, as the IMD 702, depending on functionality, may be implanted in other locations within the patient 700. A transmitter 704 is shown exterior to the patient 700. In some cases, the transmitter 704 may be configured to transmit reactive near-field energy that is of a wavelength (or frequency, as wavelength and frequency are related by the numerical speed of light) and amplitude that can safety pass into the patient 700 to the IMD 702 without causing excessive tissue heating or other potentially damaging effects to the patient 700.

[0091] The transmitter 704 may take any suitable form. For example, while shown schematically as a box in Figure 6, the transmitter 704 may be sized and configured for the patient 700 to periodically wear about their neck on a lanyard or in a shirt pocket, which would place the transmitter 704 proximate their chest, at about the same vertical and horizontal position as the IMD 702 within the patient's chest. In some cases, the transmitter 704 may be built into the back of a

chair that the patient 700 would periodically sit in to recharge the IMD 702. The chair could be in the patient's home, for a daily recharge, for example, or could be at a remote location such as a medical clinic, for a patient 700 having a longer recharge schedule.

[0092] As another example, the transmitter 704 could be built into a bed such that the transmitter 704 could at least partially recharge the IMD 702 each evening when the patient 700 sleeps. In some cases, the transmitter 704 could be configured to only transmit once per week, or once per month, for example, depending on the power requirements of the IMD 702. In some cases, the transmitter 704 and the IMD 702 may communicate with each other. When so provided, the IMD 702 may report its current battery recharge level to the transmitter 704, and if the current battery recharge level is below a threshold, the transmitter 704 may transmit power to the IMD 702.

[0093] It will be appreciated that the IMD 702 may be configured to periodically receive near-field energy at a wavelength and intensity that is safe for the patient 700 and that the IMD702 may use to recharge a rechargeable power source within the IMD 702. The near-field energy may be received at a rate that exceeds a rate at which power is being drawn from the rechargeable battery and consumed by various components within the IMD 702.

[0094] Figure 7 provides an illustrative circuit for a coupled inductor system 800. Inductive coupling is the near-field wireless transmission of electrical energy between a source 802 and a device 804. In some cases, the source 802 may transfer power from a source inductor 806 (e.g. source coil) to a device inductor 808 (e.g. device coil) by a magnetic field. The system 800, therefore, may act as a transformer. In some cases, a signal generator 810 may generate an alternating current (AC) through the source inductor 806 and create an oscillating magnetic field. The signal generator 810 may include an output driver. The magnetic field may pass through the device inductor 808 and induce an alternating electromagnetic force (EMF), which creates an alternating current (AC) in the device 804. The induced AC may either drive a load 812 directly, or be rectified to direct current (DC) by a rectifier (not shown) in the device 804, which drives the load 812.

[0095] In some cases, the power transferred may increase with frequency and mutual inductance between the source inductor 806 and the device inductor 808, which may depend on their geometry and the distance between them. For example, if the source inductor 806 and the device inductor 808 are on the same axis (i.e., a primary capture axis) and close together so the

magnetic flux from the source inductor 806 passes through the device inductor 808, the transfer of power may approach 100%. The greater the separation between the coils, the more the magnetic flux from the source inductor 806 may miss the device inductor 808, and the transfer of power may decrease.

[0096] In some cases, the source inductor 806 and/or the device inductor 808 may be fitted with magnetic cores. A magnetic core can be a piece of magnetically active material with a high magnetic permeability used to confine and guide magnetic fields in electrical, electromechanical and magnetic devices such as electromagnets, transformers, generators, inductors, and other magnetic assemblies. In some cases, the magnetic core may be made of ferromagnetic metal such as iron, or ferromagnetic compounds such as ferrites. The high permeability, relative to the surrounding atmosphere, may cause the magnetic field lines to be concentrated in the ferrite core, and thus may act as a flux concentrator. In some cases, the use of the ferrite core can concentrate the strength and increase the effect of magnetic fields produced by the source inductor 806 and may improve inductive coupling and the transfer of power.

[0097] In some cases, the system may achieve resonant inductive coupling. In this case, the source 802 can be tuned to resonant at the same frequency as the device 804. In some cases, the source 802 can include the source inductor 806 connected to a capacitor 814. The resonance between the source inductor 806 and the device inductor 808 can increase the coupling and the transmitted power. In some cases, when the system 800 achieves resonant inductive coupling, the source 802 and the device 804 may interact with each other more strongly than they do with non-resonant objects and power losses due to absorption in stray nearby objects may be reduced.

[0098] Figures 8A-8B provide an illustrative, but not limiting example of a near-field energy transmission system 900. As shown in Figure 8A, a source 912 may generate an alternating current (AC) through a source coil 916 to create an oscillating magnetic field 920. In some cases, the magnetic field 920 may barely pass or not pass through a receiving coil 918 of a receiver 914. For example, the direction of a primary capture axis of a receiving coil 918 may not align with a primary transfer axis of the source coil 916 or, in some cases, there may be a substantial distance between the receiving coil 918 and the source coil 916 allowing the magnetic field 920 to disperse and limit the magnetic flux that travels through the receiving coil 918. This is particular true when the receiving coil 918 is small.

[0099] To help increase the magnetic flux that is captured by the receiving coil 918, the receiving coil 918 may be disposed around a magnetically permeable material 922, such as shown in Figure 8B. The magnetically permeable material 922 can be used to concentrate, confine, guide, steer, and/or focus magnetic field lines through the receiving coil 918. In some cases, the high permeability of the magnetically permeable material 922, relative to the surrounding environment, may act as a magnetic flux concentrator by causing the magnetic field lines to be concentrated in the magnetically permeable material 922, which passes through the receiving coil 918. In some cases, the use of the magnetically permeable material 922 may improve coupling between the source coil 916 and the receiving coil 918, and thus may help improve the overall power transfer efficiency.

[0100] In some cases, the magnetically permeable material 922 may have a relative permeability greater than 900 and may be composed of any of a variety of materials. For instances, in some cases, the magnetically permeable material 922 may be a ferrite, such as, ferrite (e.g., 40% Fe_2O_3, 40% MnO, 920% CdO), Manganese-zinc ferrite (e.g., $Mn_aZn_{(1-a)}Fe_2O_4$), Nickel-zinc ferrite (e.g., $Ni_aZn_{(1-a)}Fe_2O_4$), Strontium ferrite (e.g., $SrFe_{912}O_{19}$ ($SrO \cdot 6Fe_2O_3$)), Cobalt ferrite (e.g., $CoFe_2O_4$ ($CoO \cdot Fe_2O_3$)), or Barium ferrite (e.g., $BaFe_{912}O_{19}$ ($BaO \cdot 6Fe_2O_3$)). Ferrites may be used for high-frequency applications. The material composing the ferrite can be engineered with a wide range of parameters and as ceramics, they may be insulators, which may help reduce and/or prevent eddy currents in the magnetically permeable material 922.

[0101] In some cases, the magnetically permeable material 922 may be an alloy, such as, Alnico (e.g., 35% cobalt, 34% iron, 15% Nickel, 7% aluminum, 5% titanium, and 4% copper), Comol (e.g., 914% Molybdenum, 912% cobalt, and 71% iron), Hipernom (Ni-Mo alloy) (e.g., 79% nickel, 4% molybdenum, and balance iron), Iron-silicon magnet alloy (e.g., Iron with 1-5% silicon), Magnet steel (e.g., Iron with carbon and chromium content), Chromindur (e.g., 28% chromium, 15% cobalt, and iron), Silmanal (e.g., 6.75% silver, 8.8% manganese, and 4.45% aluminum), Platinax (e.g., 76.7% platinum and 23.3% cobalt), Bismanol (e.g., Bismuth-manganese alloy with 920.8% manganese), Cobalt-platinum alloy, Chromium-manganese-antimonide (e.g., CrxMn2xSb), Ultra-mag (e.g., Pt-Co magnet material), Vectolite (e.g., Ferric and ferrous oxide with cobalt oxide), Magnadur (e.g., Barium carbonate and ferric oxide; $BaO(Fe_2O_3)_6$), Lodex (e.g., Iron-cobalt with lead powder), Rare earth magnet (e.g., Samarium-cobalt, cesium-cobal, Neodymium-iron-born magnet), Awaruite (e.g., Ni_3Fe), Wairauite (e.g.,

CoFe), mu-metal, permalloy, and supermalloy. In some cases, the alloy may be manufactured as stampings or as long ribbons for tape wound cores. In other cases, the alloy may be manufactured as powder and sintered to shape. In certain embodiments, heat treatment of the alloy (e.g., mu-metal) may increase its permeability. For example, the permeability of mu-metal may increase 40 times after annealing the mu-metal in a hydrogen atmosphere in a magnetic field.

[0102] In some cases, the magnetically permeable material 922 may be a metallic oxide, such as Magnetite (e.g., Fe_3O_4), Ulvospinel (e.g., Fe_2TiO_2), Hematite (e.g., αFe_2O_3), Ilmenite (e.g., $FeTiO_2$), Maghemite (e.g., γFe_2O_3), and Jacobsite (e.g., $MnFe_2O_4$). In some cases, the magnetically permeable material 922 may be a metallic sulfide, such as Pyrrhotite (e.g., Fe_7S_8), Greigite (e.g., Fe_3S_4), and Troilite (FeS). In some cases, the magnetically permeable material 922 may be a metallic oxyhydroxide, such as Goethite (e.g., $\alpha FeOOH$), Lepidocrocite (e.g., $\gamma FeOOH$), and Feroxyhyte (e.g., $\delta FeOOH$).

[0103] In some cases, the magnetically permeable material 922 may be a metal, such as iron (Fe), nickel (Ni), and cobalt (Co). In certain embodiments, iron may be used because it can withstand high levels of magnetic field without saturating. Annealed or "soft" iron may be used because it may have low coercivity and may not remain magnetized when the magnetic field is removed.

[0104] Figure 9 is a schematic block diagram of an illustrative implantable medical device (IMD) 1000. In some cases, the illustrative IMD 1000 may include a housing 1004 that may encompass charging circuitry 1008, a rechargeable power source 1010, and operational circuitry 1012. The IMD 1000 may also include a receiving coil 1014.

[0105] In some cases, the receiving coil 1014 may be any of a variety of different types of coils. When considering the electromagnetic regions around a transmitting coil/antenna, there are three categories; namely, (1) reactive near-field; (2) radiated near-field and (3) radiated far-field. "Inductive" charging systems operate in the reactive near-field region. In inductive power systems, power is typically transferred over short distances by magnetic fields using inductive coupling between coils of wire, such as receiving coil 1014 or by electric fields using capacitive coupling between electrodes. In radiative power systems (e.g. radiated near-field and radiated far-field), power is typically transmitted by beams of electromagnetic (EM) energy. Radiative power systems can often transport energy for longer distances, but the ability of a receiving antenna to capture sufficient energy can be challenging, particular for applications where the size of the

receiving antenna is limited.

[0093] In some cases, a transmitter (e.g., transmitter 704, from Figure 6) and IMD 1000 may inductively transfer power between about 10 kHz and 100 MHz within the patient's (e.g., patient 700, from Figure 6) body. When so provided, the system operates in the reactive, non-radiative, near-field (as in inductive charging system). In some cases, the transmitter 704 may transmit the near-field energy such that the receiving coil 1014 may capture the near-field energy and provide it to the charging circuitry 1008. In certain embodiments, the receiving coil 1014 is disposed around a portion of the housing 1004 of the IMD 1000. In certain embodiments, the receiving coil 1014 may be configured to receive near-field energy. The charging circuitry 1008 may be operably coupled with the receiving coil 1014 and the rechargeable power source 1010. In some embodiments, feedthroughs 1002, 1006 may extend from outside the housing 1004 to inside the housing 1004, and may electrically connect the receiving coil 1014 to the charging circuitry 1008. Feedthroughs 1002, 1006 may be conductors, for example, that are used to carry a signal through the housing 1004.

[0094] In some cases, the charging circuitry 1008 may be configured to charge the rechargeable power source 1010 using the near-field energy received by the receiving coil 1014. In some cases, the receiving coil 1014 may be configured to receive sufficient near- field energy from a wavelength band of near-field energy transmitted from outside the patient 700 (Figure 6) to recharge the rechargeable power source 1010 at a rate faster than the rechargeable power source 1010 is depleted by powering the IMD 1000 when the wavelength band of near-field energy is transmitted at an intensity that does not cause heat damage to the patient 700. In some cases, the housing 1004 has a substantially cylindrical profile, or a tubular form or shape and the receiving coil 1014 may be conformed to the substantially cylindrical profile, or the tubular form or shape of an outer surface of the housing 1004.

[0106] In some cases, the charging circuitry 1008 may be configured to convert the received near-field energy into a form that may be used to recharge the rechargeable power source 1010. In some instances, the charging circuitry 1008 may function to recharge the rechargeable power source 1010, and the IMD 1000 may include the operational circuitry 1012 to provide other functions ascribed to the IMD 1000. In some cases, the charging circuitry 1008 may provide power directly to the operational circuitry 1012 of the IMD 1000. The operational circuitry 1012 may include sensing circuitry, therapy delivery circuitry, communication circuitry, and/or any other

suitable circuitry, depending on the application.

[0107] The rechargeable power source 1010 may include any type of rechargeable power source. In some cases, the rechargeable power source 1010 may include a rechargeable battery, a supercapacitor and/or any other suitable rechargeable power source. The rechargeable power source 1010 may take a three dimensional shape that facilitates incorporation of the rechargeable power source 1010 into the housing 1004 of the IMD 1000. As will be appreciated and as previously stated, in some cases, the housing 1004 may have a cylindrical or a substantially cylindrical shape, or a tubular or substantially tubular shape, in which case the rechargeable power source 1010 may have a cylindrical, tubular, or annular profile, such as a button battery or an elongated (in length) battery having a substantially cylindrical shape or tubular shape, but this is not required. In some cases, the rechargeable power source 1010 may comprise a primary (non-rechargeable) battery (e.g., FeS_2) and a secondary (rechargeable) battery. In other cases, the rechargeable power source 1010 may include only the primary battery. In some cases the housing 1004 may be rigid; in some cases it may be flexible. It is recognized that there are possible tradeoffs in rechargeable battery shape and dimensions relative to performance, so these issues should be considered in designing the rechargeable power source 1010 for a particular use. While Figure 9 schematically shows a single rechargeable power source 1010, in some cases, there may be two, three or more distinct rechargeable power sources 1010, each electrically coupled with the charging circuitry 1008. For example, in some cases, there may be performance advantages in having multiple rechargeable power sources 1010 (serial or parallel connected). In some instances, there may be packaging advantages to having multiple (and smaller) rechargeable power sources 1010. In some cases, the rechargeable power source 1010 may include more than one type of rechargeable power sources (e.g. both a rechargeable battery and a super capacitor).

[0108] In certain embodiments, a portion of the housing 1004 may include and/or may comprise the magnetically permeable material 1016. In other cases, the magnetically permeable material 1016 may be secured to, embedded in, or otherwise carried by the housing 1004. In some cases, the magnetically permeable material 1016 may be secured to, embedded in, or otherwise carried by one or more components within the housing 1004, such as a battery of the rechargeable power source 1010 or other component within the housing 1004. For example, the magnetically permeable material 1016 may be included with non-active components, such as current collectors within the battery. In other cases, the magnetically permeable material 1016 may be included with

active components, such as lead compounds within the battery. In some cases, where the battery is a non-rechargeable battery, the coil may be used for inductive communication and not for re-charging the battery. When so provided, a magnetically permeable material 1016 in the battery may help direct the magnetic flux through the coil, which may help improve inductive communication efficiency.

[0109] According to various embodiments, the magnetically permeable material 1016, and the location, shape and orientation thereof, can be arranged to concentrate, confine, guide, steer, and/or focus magnetic fields through the receiving coil 1014. In some cases, the permeability of the magnetically permeable material 1016 relative to the surrounding environment (e.g., relative permeability (μ_r) of greater than 10, 100, 1000, 10000, or more) may help concentrate the magnetic flux in the magnetically permeable material 1016, which may pass through the receiving coil 1014. In some cases, the use of the magnetically permeable material 1016 may help improve inductive coupling between a transmitter coil and the receiving coil 1014, and thus improve the overall power transfer efficiency to the rechargeable power source 1010.

[0110] Figure 10 is a schematic block diagram of another illustrative implantable medical device (IMD) 1100. The configuration and operation of the IMD 1100 and its components may be similar to the configuration and operation of the IMD 1000 of Figure 9. In some cases, as seen in Figure 10, the IMD 1100 may include communication circuitry 1110. In certain embodiments, the communication circuitry 1110 may be operatively coupled to the coil 1112 and may provide a communication pathway to transmit messages to an external receiver (not shown), devices such as sensors, other medical devices, and/or the like, that are located externally to the IMD 1100. Such devices may be located either external or internal to the patient's 700 (Figure 6) body. Irrespective of the location, external devices (i.e. external to the IMD 1100 but not necessarily external to the patient's 700 body) can communicate with the IMD 1100 via communication circuitry 1110 to accomplish one or more desired functions. The communication circuitry 1110 may be configured to use one or more methods for communicating with the external receiver. For example, the communication circuitry 1110 may communicate via radiofrequency (RF) signals, inductive coupling, optical signals, acoustic signals, conducted communication signals, and/or any other signals suitable for communication.

[0111] In some cases, electrodes 1102a and 1102b may be exposed external to the housing 1104 and may be operably coupled to communication circuitry 1110 disposed within the housing

1104. In some cases, the communication circuitry 1110 may be configured to communicate with one or more external devices (e.g. the external receiver) using conducted communication via electrodes 1102a and 1102b. Alternatively, or in addition, the communication circuitry 1110 of IMD 1100 may be configured to communicate with one or more external devices (e.g. the external receiver) using inductive communication via coil 1112.

[0112] In some cases, the IMD 1100 may communicate information, such as sensed electrical signals, data, instructions, messages, R-wave detection markers, etc., to the external receiver through the communication circuitry 1110. The IMD 1100 may additionally receive information such as signals, data, instructions and/or messages from the external receiver through the communication circuitry 1110, and the IMD 1100 may use the received signals, data, instructions and/or messages to perform various functions, such as charging the rechargeable power source 1108, storing received data, and/or performing any other suitable function.

[0113] In some cases, the communication circuitry 1110 may establish a communication pathway between the IMD 1100 and the external receiver using an inductive mode of communication that utilizes near-field energy. Near-Field communication is a wireless form of short range communication using near-field magnetic flux for data transmission. For example, in some embodiments, an inductive communication link may be provided when the external receiver is not being utilized for transmission of electrical energy to recharge the rechargeable power source 1108 of the IMD 1100. For instance, the communication circuitry 1110 may be configured to send an alert to the external receiver when the rechargeable power source 1108 is currently at a half-charged state or below. In this case, the communication circuitry 1110 may drive a communication signal (e.g., an AC signal) onto the coil 1112 to indicate the rechargeable power source 1108 is at or below the half-charged state. The communication signal may then create an oscillating magnetic field that may pass through the external receiver coil and induce an EMF. The EMF may then create an AC signal in the external receiver and the external receiver may decipher the AC signal. In certain embodiments, the external receiver may include a user-interface (not shown) with illuminating devises such as LED's, or audio devices, such as speakers, to display or issue a human perceptible alert in response to deciphering the AC signal. For example, the LED may be illuminated and/or the speakers may release a "buzz" sound indicating that the IMD 1100 is at or below the half-charged state. The patient 700 may observe the illumination of the LED and/or hear the "buzz" from the speakers and use the external receiver to transmit electrical energy to

recharge the rechargeable power of source 1108 of the IMD 1100. In some cases, the external receiver may send a message to the patient's mobile phone or other device to alert the patient.

[0114] In certain embodiments, the rechargeable power source 1108 may comprise only a primary (non-rechargeable) battery (e.g., FeS_2) and the magnetically permeable material 1114 may be with non-active or active components within the battery. In this case, the coil 1112 may be only configured to establish an inductive communication link with the external receiver or another external device (e.g., the patient's mobile phone, a network communication device, database, etc.).

[0115] In another embodiment, the inductive communication link may be provided when the external receiver is being utilized for transmission of electrical energy to recharge the rechargeable power source 1108 of the IMD 1100. In this case, the external receiver may generate an alternating current (AC) and create an oscillating magnetic field via a coil. The magnetic field may pass through the coil 1112 of the IMD 1100 and induce an EMF, which creates an AC in the IMD 1100. The communication circuitry 1110 may be configured to send an alert to the external receiver when the external receiver is deemed to be misaligned with the IMD 1100. For example, in some cases, misalignment of the external receiver with the IMD 1100 may cause the IMD 1100 to not charge sufficiently when the magnetic field is applied and charging is expected. The communication circuitry 1110 may drive a communication signal onto the coil 1112 by modulating a transfer energy parameter (e.g., the amplitude, frequency, phase, pulse width, etc.) of the magnetic field. The modulated magnetic field may then pass back through the external receiver coil and induce an EMF, which creates an AC signal in the external receiver. The external receiver may then decipher the AC signal. The LED may be illuminated and/or the speakers may release a "buzz" sound in response to deciphering the AC signal. The patient 700 may observe the illumination of the LED and/or hear the "buzz" from the speakers and realign the external receiver until the LED is no longer illuminated and/or the speakers stop releasing the "buzz" sound. In some cases, the external receiver may send a message to the patient's mobile phone or other device to alert the patient.

[0116] In certain embodiments, a portion of the housing 1104 may include and/or may comprise the magnetically permeable material 1114. In other cases, the magnetically permeable material 1114 may be secured to, embedded in, or otherwise carried by the housing 1104. In some cases, the magnetically permeable material 1114 may be secured to, embedded in, or otherwise carried by one or more components within the housing 1104, such as a battery of the rechargeable

power source 1108 or other component within the housing 1104. The magnetically permeable material 1114, and the location, shape and orientation thereof, can be used to concentrate, confine, guide, steer, and/or focus magnetic fields through the coil 1112. In some cases, the permeability of the magnetically permeable material 1114 relative to the surrounding environment (e.g., relative permeability (μ_r) of greater than 10, 100, 1000, 10000, or more), may help concentrate the magnetic flux in the magnetically permeable material 1114, which passes through the coil 1112. In some cases, the use of the magnetically permeable material 1114 may help improve inductive coupling between a transmitter coil and the coil 1112, and thus may help improve the overall power transfer efficiency to the rechargeable power source 1108 and/or to increase the power efficiency of communication using the coil 1112.

[0117] Figure 11 is a schematic block diagram of another illustrative implantable medical device (IMD) 1200. The configuration and operation of the IMD 1200 and its components may be similar to the configuration and operation of the IMD 1000 and its components described with respect to Figure 9. In some cases, electrodes 1218, 1220 may be exposed external to the housing 1202 and may be operably coupled to therapeutic circuitry 1212 disposed within the housing 1202. In some embodiments, feedthroughs 1204, 1208 may extend from outside the housing 1202 to inside the housing 1202, and electrically connect the electrodes 1218, 1220 to the therapeutic circuitry 1212. Feedthroughs 1204, 1208 may be conductors, for example, and may be used to carry a signal through the housing 1202. In some instances, a magnetically permeable material may be used in the feedthroughs 1204, 1208.

[0118] While two electrodes are illustrated, it will be appreciated that in some instances the IMD 1200 may include three, four or more distinct electrodes. Depending on the intended functionality of the IMD 1200, the electrodes 1218, 1220 may be used for sensing and/or pacing the patient's (e.g., patient 700, from Figure 6) heart. In some instances, the IMD 1200 may be a leadless cardiac pacemaker (LCP), an implantable monitoring device or an implantable sensor. In some cases, similar to electrodes 1102a and 1102b above, the electrodes 1218, 1220 may be used for communicating with other implanted devices and/or with external devices. In some cases, communication with other implanted devices may include conductive communication, but this is just an example.

[0119] In some cases, the charging circuitry 1206 and the therapeutic circuitry 1212 may be located on distinct circuit boards or may be manifested within distinct integrated circuits (ICs). In

some cases, the charging circuitry 1206 and the therapeutic circuitry 1212, while shown as distinct elements, may be combined within a single IC or on a single circuit board. In some cases, the therapeutic circuitry 1212 may be operatively coupled to the electrodes 1218, 1220. In some instances, the therapeutic circuitry 1212 may be configured to sense one or more signals via the electrodes 1218, 1220 (or additional electrodes) and/or to stimulate tissue via the electrodes 1218, 1220. In some cases, the therapeutic circuitry 1212 may pace, or stimulate tissue, at least partly in response to the one or more sensed signals.

[0120] In certain embodiments, a portion of the housing 1202 may include and/or may comprise the magnetically permeable material 1216. In other cases, the magnetically permeable material 1216 may be secured to, embedded in, or otherwise carried by the housing 1202. In some cases, the magnetically permeable material 1216 may be secured to, embedded in, or otherwise carried by one or more components within the housing 1202, such as a battery of the rechargeable power source 1210 or other component within the housing 1202. The magnetically permeable material 1216, and the location, shape and orientation thereof, can be used to concentrate, confine, guide, steer, and/or focus magnetic fields through a coil 1214 wrapped about the housing. In some cases, the permeability of the magnetically permeable material 1216 relative to the surrounding environment (e.g., relative permeability (μ_r) of greater than 10, 100, 1000, 10000, or more), may help concentrate the magnetic flux in the magnetically permeable material 1216, which passes through the coil 1214. In some cases, the use of the magnetically permeable material 1216 may help improve inductive coupling between a transmitter coil and the coil 1214, and thus may help improve the overall power transfer efficiency to the rechargeable power source 1210 and/or to increase the power efficiency of communication using the coil 1214.

[0121] Figures 12A-12B provide schematic views of an illustrative IMD 1300 that may be configured to be implanted within a patient such as the patient 700 (Figure 6). Referring to Figure 12A, in some cases, the illustrative IMD 1300 may include electrodes 1314, 1316 that may be exposed external to a housing 1310 and may be operably coupled to a controller 1304 disposed within the housing 1310. The controller 1304 may include, for example, a processor, a state machine and/or other suitable circuitry. In some embodiments, one or more feedthroughs 1302, 1306 may extend from outside the housing 1310 to inside the housing 1310, and may electrically connect the electrodes 1314, 1316 to the controller 1304. In some instances, a magnetically permeable portion 1326 may be used in the feedthroughs 1302, 1306, but this is not required.

[0122] While two electrodes are illustrated, it will be appreciated that in some instances the IMD 1300 may include three, four or more distinct electrodes. Depending on the intended functionality of the IMD 1300, the electrodes 1314, 1316 may be used for sensing and/or pacing the patient's 13000 heart. Alternatively, or in addition, the electrodes 1314, 1316 may be used for communicating with other implanted devices and/or with external devices. In some cases, communication with other implanted devices may include conductive communication, but this is not required. Rechargeable power source 1308 may be disposed within the housing 1310 and may be configured to power the IMD 1300, including the controller 1304. In some instances, the IMD 1300 may be a leadless cardiac pacemaker (LCP), an implantable monitoring device or an implantable sensor.

[0123] In various embodiments, the IMD 1300 may include an inductive coil 1312. In certain embodiments, the inductive coil 1312 may be external to the housing 1310 and disposed around a portion 1326 of the housing 1310. It is contemplated that the inductive coil 1312 may be any of a variety of different types of coils. In some cases, an external receiver (e.g., external transceiver 1330, from Figure 12B) may inductively transfer power between about 10 kHz and 100 MHz within the patient's 13000 body to the inductive coil 1312 of the IMD 1300. It is contemplated that the system may operate in the reactive, non-radiative, near-field (as in inductive charging system). In some cases, the external transceiver 1330 may transmit near-field energy such that the inductive coil 1312 of the IMD 1300 may capture the near-field energy and provide it to the controller 1304. In some embodiments, feedthroughs 1318, 1320 may extend from outside the housing 1310 to inside the housing 1310, and may electrically connect the inductive coil 1312 to the controller 1304. Feedthroughs 1318, 1320 may be conductors used to carry a signal through the housing 1310.

[0124] The inductive coil 1312 may be configured to receive sufficient near-field energy from a wavelength band of near-field energy transmitted from outside the patient 700, and convert the received near-field energy into a form that may be used to recharge the rechargeable power source 1308 and/or to increase the power efficiency of communication. In various embodiments, the rate the rechargeable power source 1308 is charged may be at a rate faster than the rechargeable power source 1308 is depleted by powering the IMD 1300 when the wavelength band of near-field energy is transmitted at an intensity that does not cause heat damage to the patient 700. In some cases, the housing 1310 may have a substantially cylindrical profile or tubular form and the inductive

coil 1312 may be wrapped around, printed on, and/or carried by the portion 1326 of the housing 1310. In some instances, the inductive coil 1312 may have multiple layers wrapped around the portion 1326 of the housing 1310.

[0125] In certain embodiments, a portion 1326 of the housing 1310 that carries the inductive coil 1312 may itself be composed of or include a magnetically permeable material. In other cases, a magnetically permeable material may be secured to, embedded in, or otherwise carried by the housing 1310. For example, referring to Figure 14, a magnetically permeable material 1500 is shown as formed strips embedded in a portion of a housing 1502. In various embodiments, the portion of the housing 1502 may be configured from a non-magnetic material that could include, but is not limited to, metals (e.g., aluminum, copper, lead, nickel, tin, titanium, and zinc), alloys (e.g., brass), precious metals (e.g., gold, silver, and platinum), and rare metals (e.g., cobalt, mercury, tungsten, beryllium, bismuth, cerium, cadmium, niobium, indium, gallium, germanium, lithium, selenium, tantalum, tellurium, vanadium, and zirconium). In some cases, the non-magnetic portion of the housing 1502 may be beneficial in limiting undesirable manufacturing qualities that may be incurred if the entire portion of the housing was composed of the magnetically permeable material.

[0126] Referring again to Figure 12A, in some cases, the magnetically permeable material may be secured to, embedded in, or otherwise carried by one or more components within the housing 1310, such as a battery of the rechargeable power source 1308 or other component within the housing 1310. In certain embodiments, the magnetically permeable material may serve as battery active materials, such as $LiFePO_4$, $LiCoO_2$, $LiNi_{0.33}Mn_{0.33}Co_{0.33}O_2$ (NMC), $LiNi_{0.8}Co_{0.15}Al_{0.05}$ (NCA), and/or any other suitable material. In certain embodiments, the magnetically permeable material may be distributed throughout the rechargeable power source 1308. In some cases, the magnetically permeable material may be a ferrite or a metal oxide and may be added to the cathode material of the rechargeable power source 1308. In some cases, the magnetically permeable material may be a metal or a metal alloy and may be added to the cathode or anode material of the rechargeable power source 1308. In any event, the magnetically permeable material, and the location, shape and/or orientation thereof, can be arranged to concentrate, confine, guide, steer, and/or focus magnetic fields through the inductive coil 1312. In some cases, the permeability of the magnetically permeable material relative to the surrounding environment (e.g., relative permeability (μ_r) of greater than 10, 100, 1000, 10000, or more) may

help concentrate the magnetic flux in the magnetically permeable material, which may pass through the inductive coil 1312. In some cases, the use of the magnetically permeable material may help improve inductive coupling between a transmitter coil 1328 and the inductive coil 1312, and thus improve the overall power transfer efficiency to the IMD 1300.

[0127] Referring to Figure 12B and as discussed herein, the magnetically permeable material can be used to concentrate, confine, guide, steer, and/or focus a magnetic field 1332 through the inductive coil 1312 of the IMD 1300. In some cases, the high permeability of the magnetically permeable material, relative to the surrounding environment, may act as a magnetic flux concentrator, and may cause the magnetic field lines 1332 to bend and be concentrated in the magnetically permeable material portion 1326, which may pass through the inductive coil 1312.

[0128] In some cases, the magnetically permeable material portion 1326 may have a relative permeability (μ_r) greater than 10, 100, 1000, 10000, or more. The magnetically permeable material portion 1326 may include a variety of different materials. For instances, in some cases, the magnetically permeable material portion 1326 may be a ferrite, an alloy (e.g., mu-metal), a metallic oxide, a metallic sulfide, a metallic oxyhydroxide, or a metal. These are just examples. In some cases, the magnetically permeable material portion 1326 may have a conductance (σ) of less than 1E-4 ohm^{-1} cm^{-1}. In some cases, the magnetically permeable material portion 1326 may have a cylindrical or a substantially cylindrical shape, or a tubular or substantially tubular shape or form. In some cases, the housing 1310 itself may be composed of the magnetically permeable material. In some cases, the magnetically permeable material portion 1326 may have a substrate or base, such as a polymer substrate or base, with a magnetically permeable material attached, embedded, disposed on, or otherwise carried by the substrate or base. Alternatively, or in addition, the housing 1310 itself, or a portion thereof such a portion 1326, may be formed from a magnetically permeable material.

[0129] Referring again to Figure 12A, according to various embodiments, there may be a protective layer 1324 provided over the inductive coil 1312. In certain embodiments, the inductive coil 1312 may be sealed by a biocompatible protective layer 1324. The biocompatible protective layer 1324 may include any suitable material including, for example, titanium and its alloys, noble metals and their alloys, biograde stainless steels, cobalt-based alloys, tantalum, niobium, titanium-niobium alloys, Nitinol, MP35N (a nickel-cobalt-molybdenum alloy), alumina, zirconia, quartz, fused silica, biograde glass, silicon, and some biocompatible polymers. These are just examples.

In some cases, the protective layer 1324 may provide a barrier from the body including cells, proteins, platelets, and/or other biological and/or chemical agents. In some cases, the protective layer 1324 provides a hermetic seal. In some cases the inductive coil 1312 may be composed of a corrosion resistant material, for example, gold, silver, stainless steel, etc. and not have a protective layer 1324.

[0130] The illustrative IMD 1300 may further include a fixation mechanism 1322 proximate a distal end of the housing 1310 configured to attach the IMD 1300 to a tissue wall (e.g., tissue wall 1334, from Figure 12B) of a heart (e.g., heart H, from Figure 12B), or otherwise anchor the IMD 1300 to the anatomy of the patient. As shown in Figure 12A, in some instances, the fixation mechanism 1322 may include one or more, or a plurality of hooks or tines anchored into the cardiac tissue of the heart to attach the IMD 1300 to a tissue wall. In other instances, the fixation mechanism 1322 may include one or more, or a plurality of passive tines, configured to entangle with trabeculae within the chamber of the heart and/or a helical fixation anchor configured to be screwed into the tissue wall to anchor the IMD 1300 to the heart.

[0131] In some cases, the illustrative IMD 1300 may include a docking member 1336 proximate a proximal end of the housing 1310 configured to facilitate delivery and/or retrieval of the IMD 1300. For example, the docking member 1336 may extend from the proximal end of the housing 1310 along a longitudinal axis of the housing 1310. The docking member 1336 may include a head portion 1338 and a neck portion 1340 extending between the housing 1310 and the head portion 1338. The head portion 1338 may be an enlarged portion relative to the neck portion 1340. For example, the head portion 1338 may have a radial dimension from the longitudinal axis of the IMD 1300 which is greater than a radial dimension of the neck portion 1340 from the longitudinal axis of the IMD 1300. The docking member 1336 may further include a tether retention structure 1342 extending from the head portion 1338. The tether retention structure 1342 may define an opening 1344 configured to receive a tether or other anchoring mechanism therethrough. While the retention structure 1342 is shown as having a generally "U-shaped" configuration, the retention structure 1342 may take any shape which provides an enclosed perimeter surrounding the opening 1344 such that a tether may be securably and releasably passed (e.g. looped) through the opening 1344. The retention structure 1342 may extend though the head portion 1338, along the neck portion 1340, and to or into the proximal end of the housing 1310. The docking member 1336 may be configured to facilitate delivery of the IMD 1300 to the

intracardiac site and/or retrieval of the IMD 1300 from the intracardiac site. Other docking members are contemplated.

[0132] Figures 13A-13B provide schematic views of an illustrative IMD 1400 that may be configured to be implanted within a patient such as the patient 700 (Figure 6). The configuration and operation of the IMD 1400 and its components may be similar to the configuration and operation of the IMD 1300 and its components described with respect to Figures 12A-12B. In some cases, the IMD 1400 may include electrodes (i.e., anode 1404 and cathode 1406) that are exposed external to the housing 1402 and may be operably coupled to the controller 1418 disposed within the housing 1402. In some embodiments, feedthroughs 1414, 1416 may extend from outside the housing 1402 to inside the housing 1402, and may electrically connect the anode 1404 and the cathode 1406 to the controller 1418. While the anode 1404 and cathode 1406 are illustrated, it will be appreciated that in some instances the IMD 1400 may include three, four or more distinct electrodes. Furthermore, in some cases, the housing itself 1402 may be configured to operate as an anode or a cathode. In some instances, the IMD 1400 may be a leadless cardiac pacemaker (LCP), an implantable monitoring device or an implantable sensor.

[0133] In various embodiments, the IMD 1400 may also include an inductive coil 1412. In certain embodiments, the inductive coil 1412 may be external to the housing 1402 and disposed around (e.g. wound around) a portion of the housing 1402. It is contemplated that the inductive coil 1412 may be any of a variety of different types of coils. In some cases, an external receiver (e.g., external transceiver 1422, from Figure 13B) may inductively transfer power between about 10 kHz and 100 MHz within the patient's 700 body to the inductive coil 1412 of the IMD 1400. It is contemplated that the system may operate in the reactive, non-radiative, near-field (as in inductive charging system). In some cases, the external transceiver 1422 may transmit near-field energy such that the inductive coil 1412 of the IMD 1400 may capture the near-field energy and provide it to the controller 1418. The controller 1418 may then utilize the near-field energy to perform many different functions and operations, such as transmitting messages by driving a communication signal onto the inductive coil 1412. In some embodiments, one or more feedthroughs 1410 may extend from outside the housing 1402 to inside the housing 1402, and may electrically connect the inductive coil 1412 to the controller 1418.

[0134] In certain embodiments, at least a portion of the housing 1402 that carries the inductive coil 1412 may be composed of or include a magnetically permeable material. In other cases, a

magnetically permeable material may be secured to, embedded in, or otherwise carried by the portion of the housing 1402 that carries the inductive coil 1412. Similar to IMD 1300 and as shown in Figure 14, IMD 1400 may include the portion of the housing 1502 and the magnetically permeable material 1500 may be formed of strips embedded in the portion of the housing 1502. Furthermore, in various embodiments, the portion of the housing 1502 may be configured from a non-magnetic material.

[0135] Referring again to Figure 13A, in some cases, the magnetically permeable material may be secured to, embedded in, or otherwise carried by one or more components within the housing 1402, such as a battery of the rechargeable power source 1420 or other component within the housing 1402. Referring to Figure 13B, the magnetically permeable material, and the location, shape and orientation thereof, can be arranged to concentrate, confine, guide, steer, and/or focus a magnetic field 1424 through the inductive coil 1412. In some cases, the permeability of the magnetically permeable material relative to the surrounding environment (e.g., relative permeability (μ_r) of greater than 10, 100, 1000, 10000, or more) may help concentrate the magnetic flux in the magnetically permeable material, which may pass through the inductive coil 1412. In some cases, the use of the magnetically permeable material may help improve inductive coupling between a transmitter coil 1426 and the inductive coil 1412, and thus improve the overall power transfer efficiency to the IMD 1400.

[0136] In some cases, the magnetically permeable material may be a ferrite, an alloy (e.g., mu-metal), a metallic oxide, a metallic sulfide, a metallic oxyhydroxide, or a metal. These are just examples. In some cases, the magnetically permeable material may have a conductance (σ) of less than 1E-4 ohm^{-1} cm^{-1}. In some cases, the portion of the housing 1402 that carries the inductive coil 1412 may be entirely formed from a magnetically permeable material, and in some cases, may have a cylindrical or a substantially cylindrical shape, or a tubular or substantially tubular shape or form. In some cases, the housing 1402 may have a substrate or base, such as a polymer substrate or base, with a magnetically permeable material attached, embedded, disposed on, or otherwise carried by the substrate or base.

[0137] Referring again to Figure 13A, according to various embodiments, there may be a protective layer 1408 over the inductive coil 1412. The protective layer 1408 may also extend over at least part of the housing 1402. In certain embodiments, the protective layer 1408 may be a sealant that includes biocompatible materials. In various embodiments, the protective layer 1408

may include a barrier. In some cases, the barrier may provide a hermetic sealed. In some cases, the protective layer 1408 may comprise various materials, such as glass, for example. In some cases, the inductive coil 1312 may be composed of a corrosion resistant material, for example, gold, silver, stainless steel, etc. and not have a protective layer 1408.

[0138] The rechargeable power source 1420 may include any type of rechargeable battery. In various embodiments, the rechargeable power source 1420 may include a magnetically permeable material. In some cases, the magnetically permeable material may have a relative permeability (μ_r) of greater than 10, 100, 1000, or more. In certain embodiments, the magnetically permeable material may serve as battery active materials, such as $LiFePO_4$, $LiCoO_2$, $LiNi_{0.33}Mn_{0.33}Co_{0.33}O_2$ (NMC), $LiNi_{0.8}Co_{0.15}Al_{0.05}$ (NCA), and/or any other suitable material. In certain embodiments, the magnetically permeable material may be distributed throughout the rechargeable power source 1420. In some cases, the magnetically permeable material may be a ferrite or a metal oxide and may be added to the cathode material of the rechargeable power source 1420. In some cases, the magnetically permeable material may be a metal or a metal alloy and may be added to the cathode or anode material of the rechargeable power source 1420.

[0139] The illustrative IMD 1400 may further include a fixation mechanism 1430 proximate a distal end of the housing 1402 configured to attach the IMD 1400 to a tissue wall (e.g., tissue wall 1428, from Figure 13B) of a heart (e.g., heart H, from Figure 13B), or otherwise anchor the IMD 1400 to the anatomy of the patient. As shown in Figure 13A, in some instances, the fixation mechanism 1430 may include one or more, or a plurality of hooks or tines anchored into the cardiac tissue of the heart to attach the IMD 1400 to a tissue wall. In other instances, the fixation mechanism 1430 may include one or more, or a plurality of passive tines, configured to entangle with trabeculae within the chamber of the heart and/or a helical fixation anchor configured to be screwed into the tissue wall to anchor the IMD 1400 to the heart.

[0140] It should be understood that this disclosure is, in many respects, only illustrative. Changes may be made in details, particularly in matters of shape, size, and arrangement of steps without exceeding the scope of the disclosure. This may include, to the extent that it is appropriate, the use of any of the features of one example embodiment being used in other embodiments.

What is claimed is:

1. An implantable medical device (IMD) configured to be implanted within a patient, the IMD comprising:

a housing configured for trans-catheter deployment, wherein at least a portion of the housing includes a magnetically permeable material with a relative permeability (μ_r) of greater than 10;

a plurality of electrodes exposed external to the housing;

therapeutic circuitry disposed within the housing, the therapeutic circuitry operatively coupled to the plurality of electrodes and configured to sense one or more signals via one or more of the plurality of electrodes and/or to stimulate tissue via one or more of the plurality of electrodes;

a rechargeable power source disposed within the housing and configured to power the therapeutic circuitry;

a receiving coil disposed around the portion of the housing that includes the magnetically permeable material, wherein the magnetically permeable material of the housing is configured to operate as a flux concentrator for concentrating non-radiative near-field energy through the receiving coil; and

charging circuitry disposed within the housing and operatively coupled with the receiving coil and the rechargeable power source, the charging circuitry configured to use the non-radiative near-field energy received via the receiving coil to charge the rechargeable power source.

2. The IMD of claim 1, further comprising one or more feedthroughs extending from outside of the housing to inside of the housing for electrically connecting the receiving coil and the charging circuitry.

3. The IMD of claim 1, further comprising one or more feedthroughs extending from outside of the housing to inside of the housing for electrically connecting one or more of the plurality of electrodes to the therapeutic circuitry.

4. The IMD of claim 1, further comprising a protective layer over the receiving coil.

5. The IMD of claim 4, wherein the protective layer provides a hermetically seal over the receiving coil.

6. The IMD of claim 1, wherein the magnetically permeable material has a conductance (σ) of less than 1E-4 ohm^{-1} cm^{-1}.

7. The IMD of claim 1, wherein the magnetically permeable material comprises a ferrite.

8. The IMD of claim 1, wherein the magnetically permeable material comprises an alloy.

9. The IMD of claim 8, wherein the housing comprises a polymer base with the magnetically permeable material secured relative to the polymer base.

10. The IMD of claim 8, wherein the portion of the housing is itself formed from the magnetically permeable material.

11. The IMD of claim 1, wherein the receiving coil is printed on the portion of the housing.

12. The IMD of claim 1, wherein the rechargeable power source disposed within the housing comprises a magnetically permeable material with a relative permeability (μ_r) of greater than 10.

13. An implantable medical device (IMD) configured to be implanted within a patient, the IMD comprising:

a housing configured for trans-catheter deployment, the housing having a portion that comprises a magnetically permeable material with a relative permeability (μ_r) of greater than 10;

a receiving coil disposed around at least a portion of the housing portion, wherein the magnetically permeable material of the housing portion is configured to operate as a flux concentrator for concentrating non-radiative near-field energy through the receiving coil;

operational circuitry disposed within the housing;

a rechargeable power source disposed within the housing and configured to power the operational circuitry; and

charging circuitry operatively coupled with the receiving coil and the rechargeable power source, the charging circuitry configured to use the non-radiative near-field energy received via the receiving coil to charge the rechargeable power source.

14. The IMD of claim 16, further comprising one or more feedthroughs extending from outside of the housing to inside of the housing for connecting the receiving coil and the charging circuitry.

15. The IMD of claim 16, wherein the receiving coil is hermetically sealed by a protective layer.

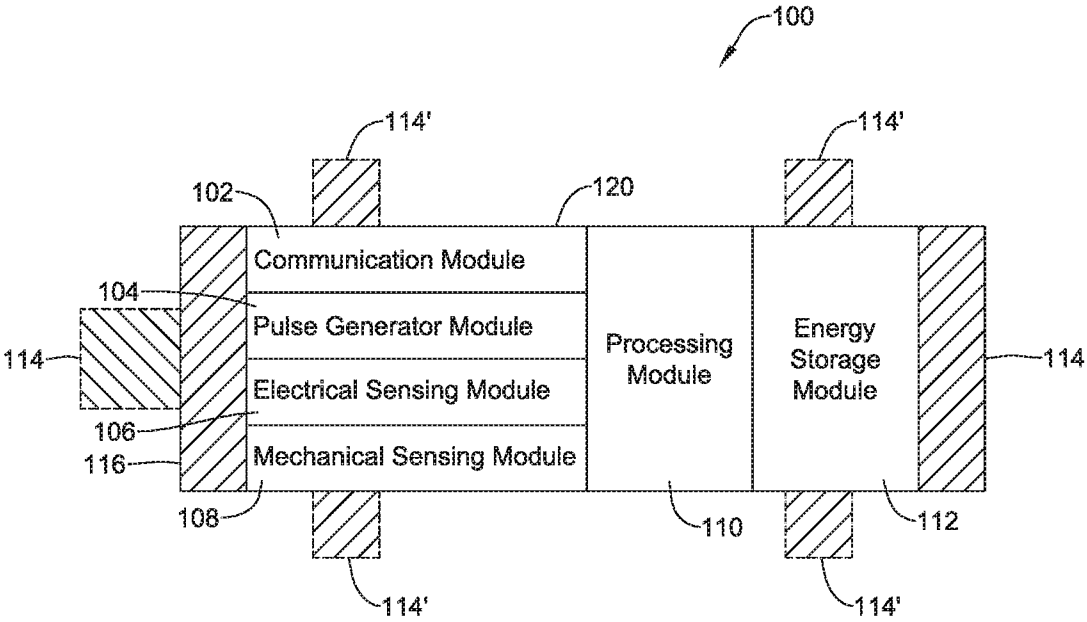
100
114'
114'
102
120
Communication Module
104
Pulse Generator Module
Processing Module
Energy Storage Module
114
114
Electrical Sensing Module
106
116
Mechanical Sensing Module
108
110
112
114'
114'

Figure 1

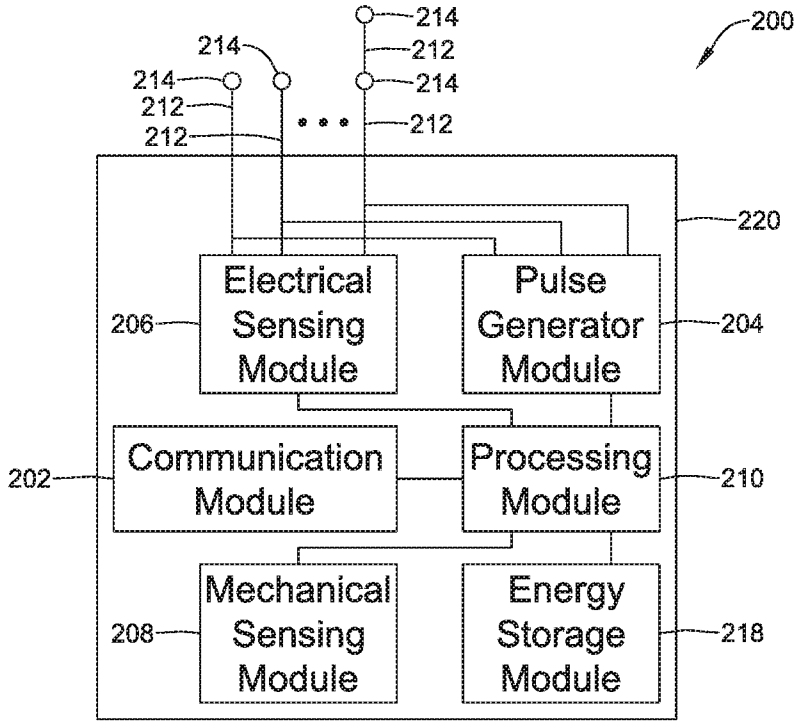
214
214
212
214
214
212
212
212
200
220
Electrical Sensing Module
206
Pulse Generator Module
204
Communication Module
202
Processing Module
210
Mechanical Sensing Module
208
Energy Storage Module
218

Figure 2

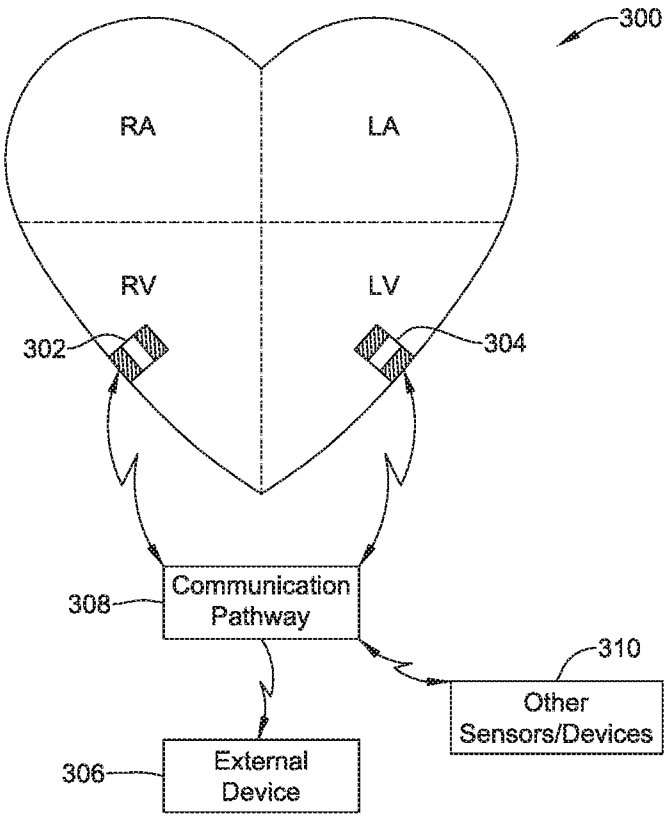
300
RA
LA
RV
LV
302
304
Communication Pathway
308
310
Other Sensors/Devices
External Device
306

Figure 3

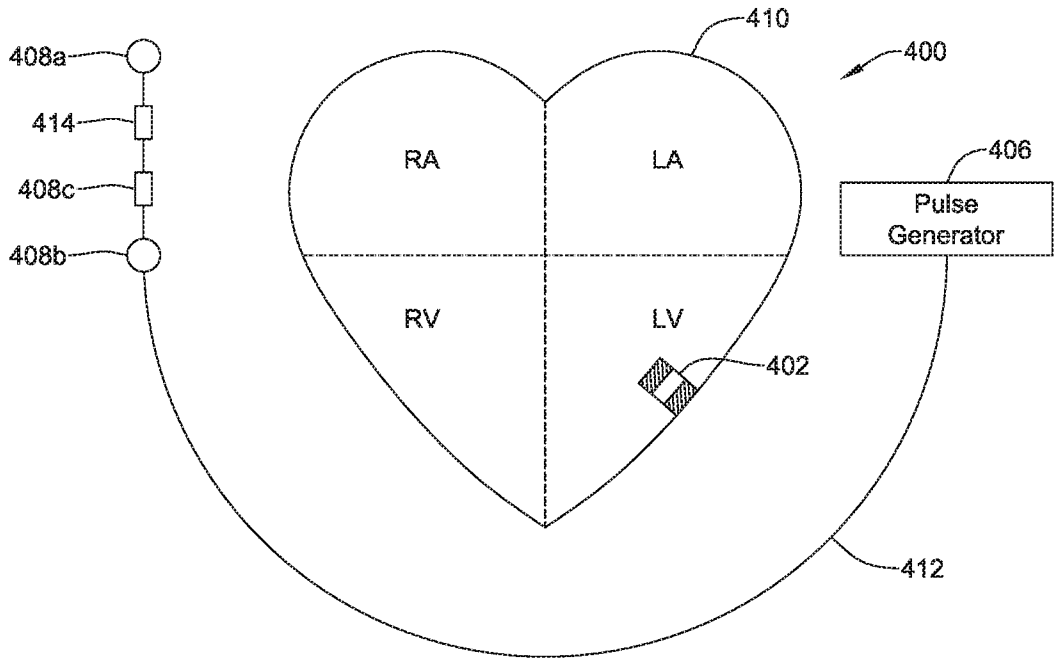
408a
414
408c
408b
410
400
RA
LA
406
Pulse
Generator
RV
LV
402
412

Figure 4

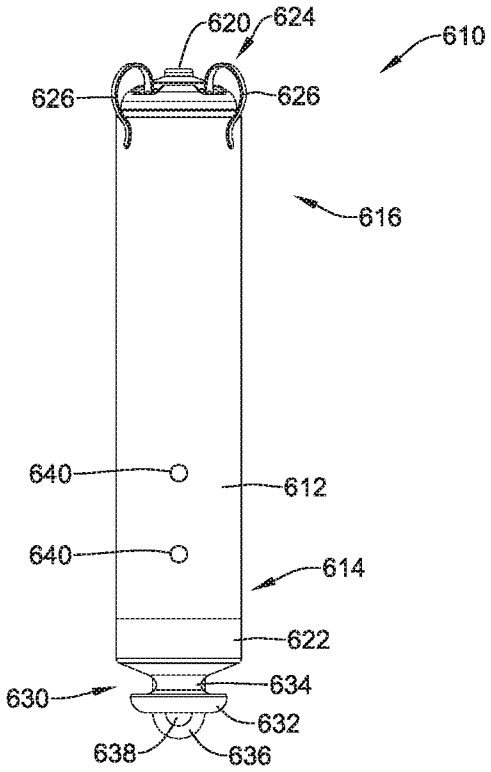

Figure 5

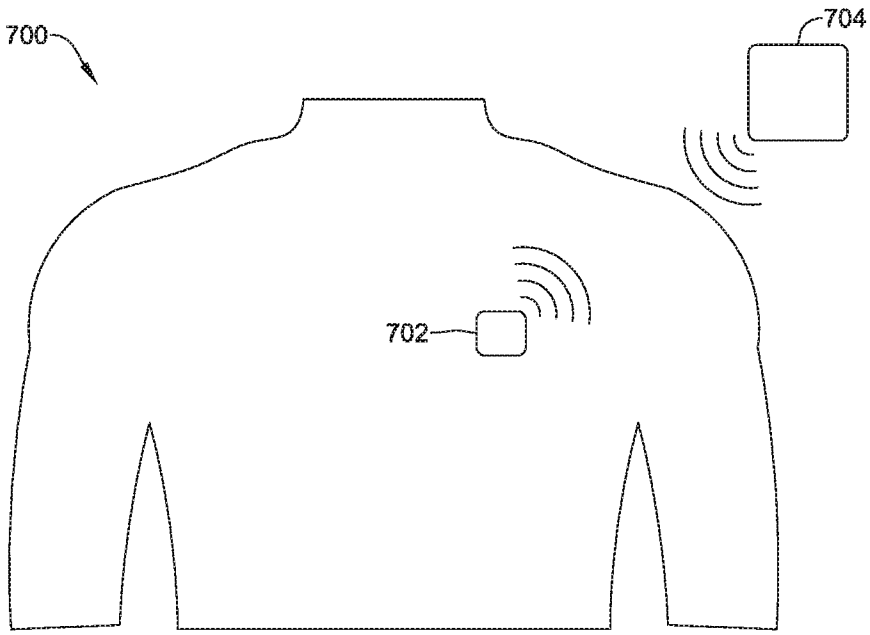

Figure 6

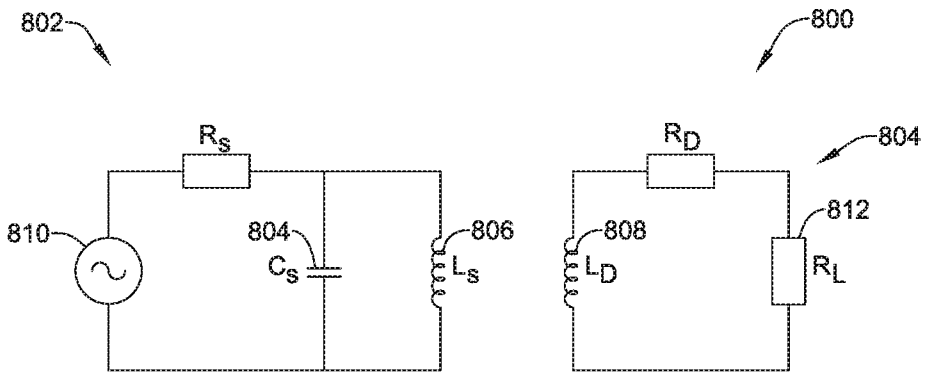

Figure 7

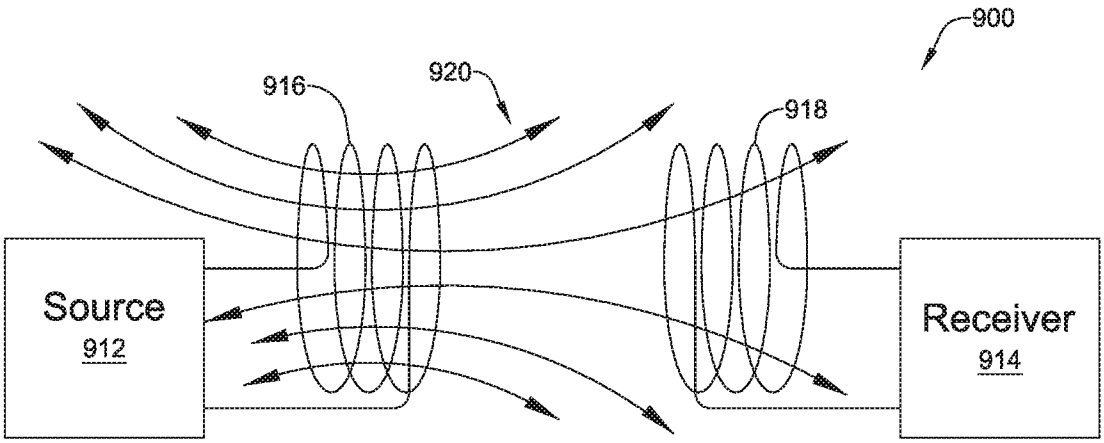

Figure 8A

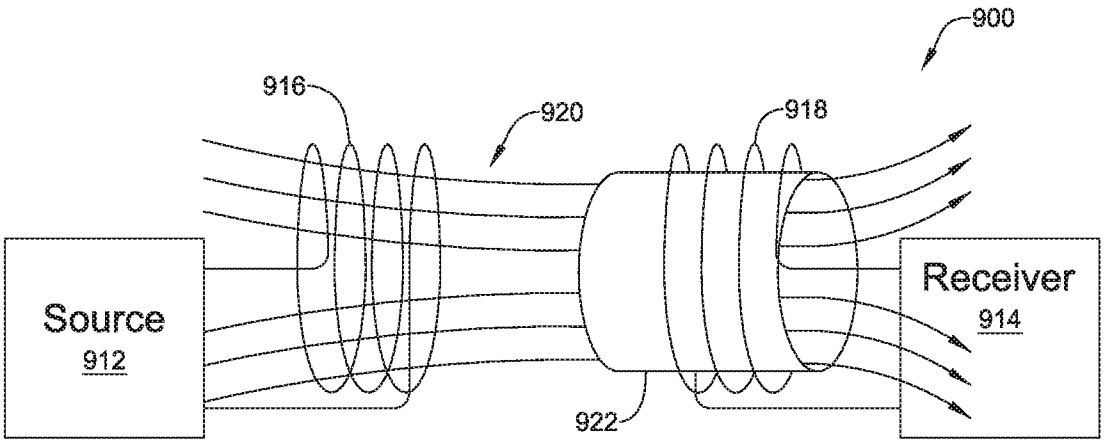

Figure 8B

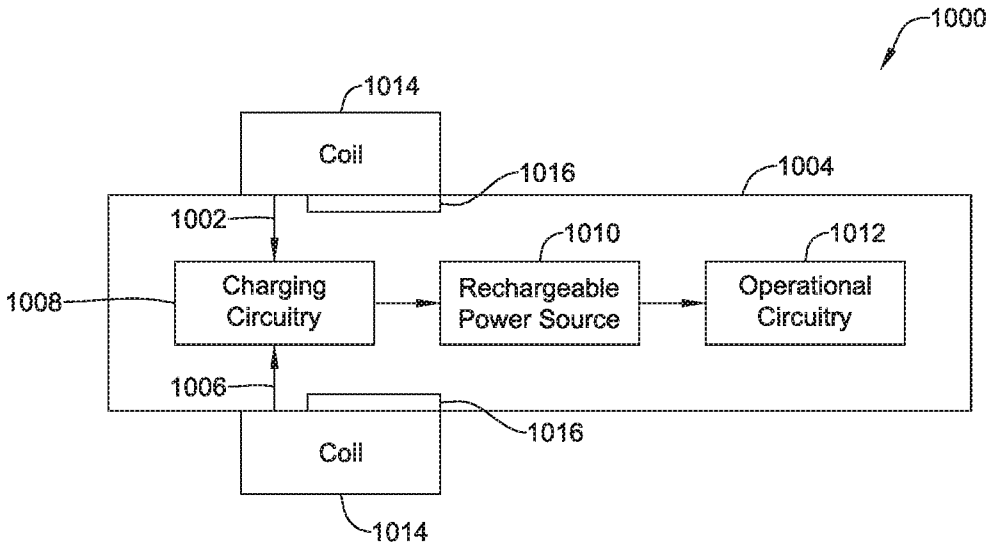
1000
1014
Coil
1016
1004
1002
1010
1012
1008
Charging Circuitry
Rechargeable Power Source
Operational Circuitry
1006
1016
Coil
1014

Figure 9

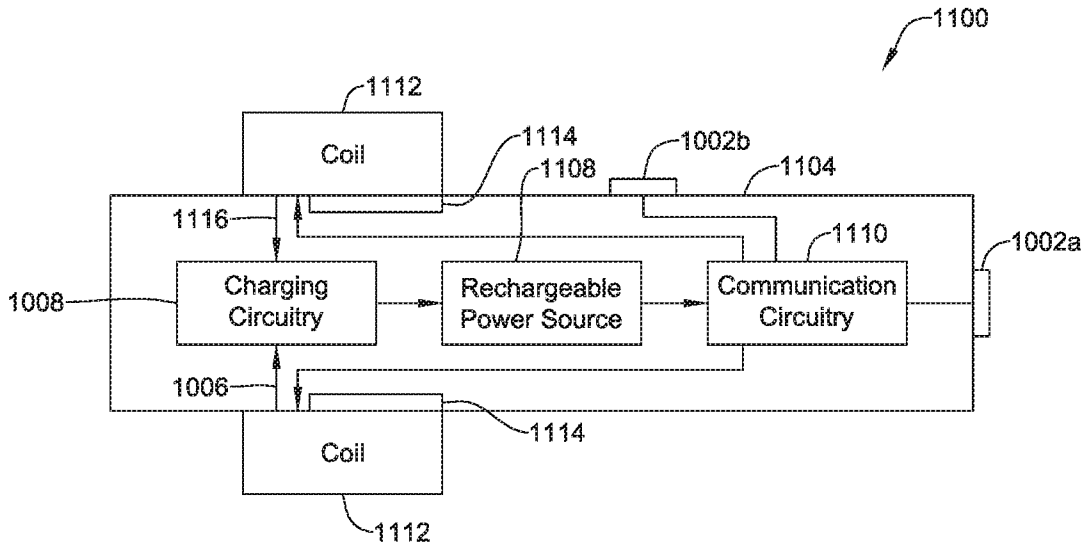
1100
1112
Coil
1114
1108
1002b
1104
1116
1110
1002a
1008
Charging Circuitry
Rechargeable Power Source
Communication Circuitry
1006
1114
Coil
1112

Figure 10

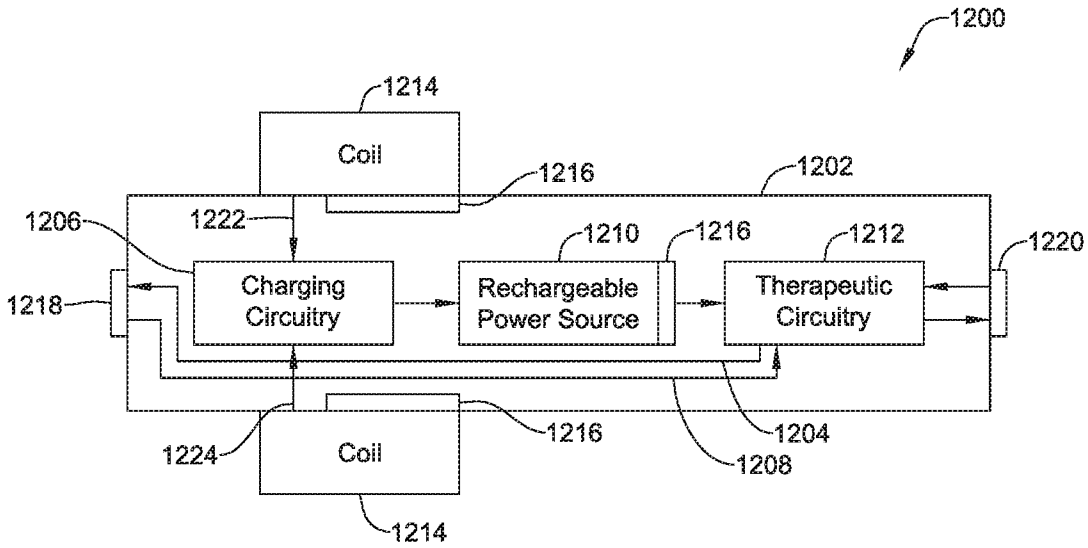
1200
1214
Coil
1216
1202
1206
1222
1210
1216
1212
1220
1218
Charging Circuitry
Rechargeable Power Source
Therapeutic Circuitry
1224
Coil
1216
1204
1208
1214

Figure 11

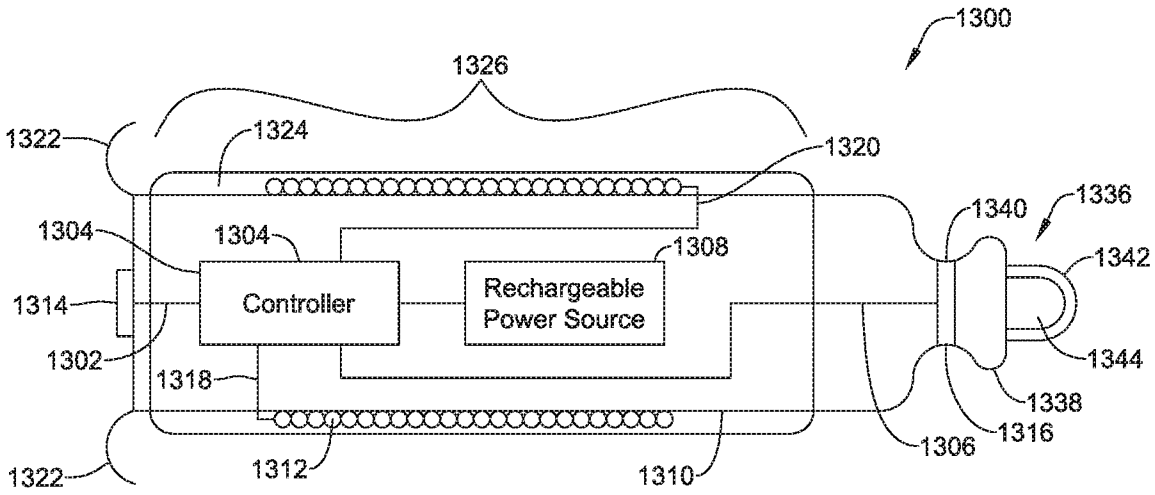
1300
1326
1322
1324
1320
1340
1336
1304
1304
1308
1342
1314
Controller
Rechargeable
Power Source
1302
1318
1344
1338
1316
1306
1322
1312
1310

Figure 12A

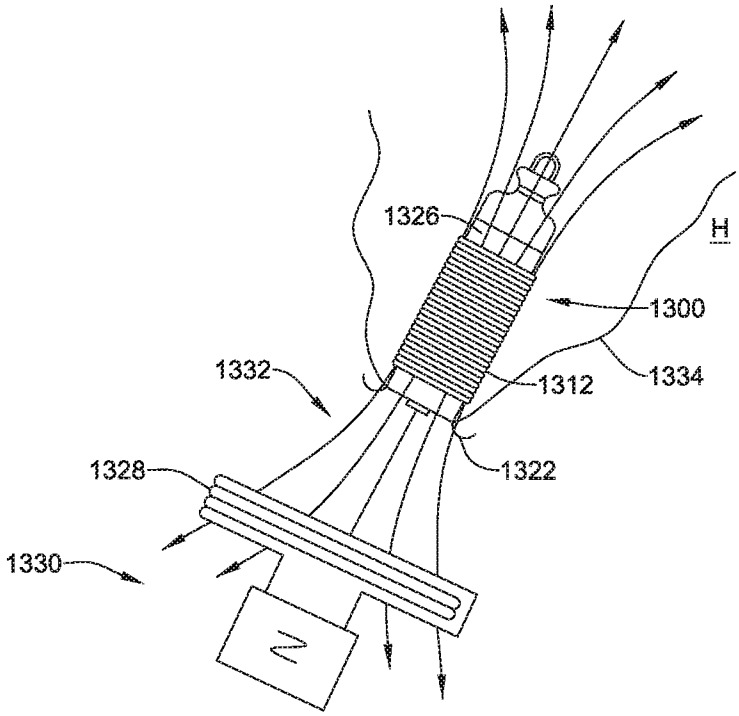

Figure 12B

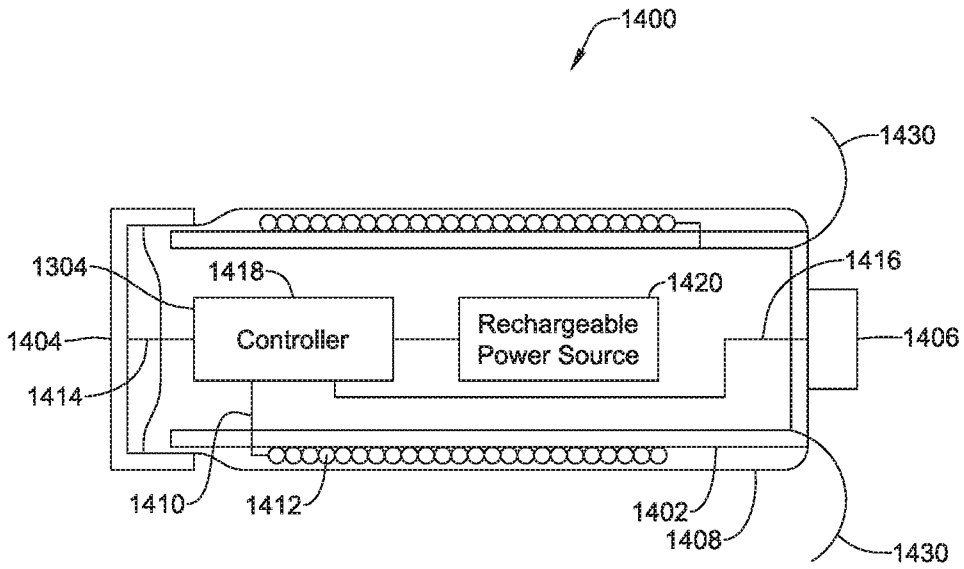
1400
1430
1304
1418
1420
1416
1404
Controller
Rechargeable
Power Source
1406
1414
1410
1412
1402
1408
1430

Figure 13A

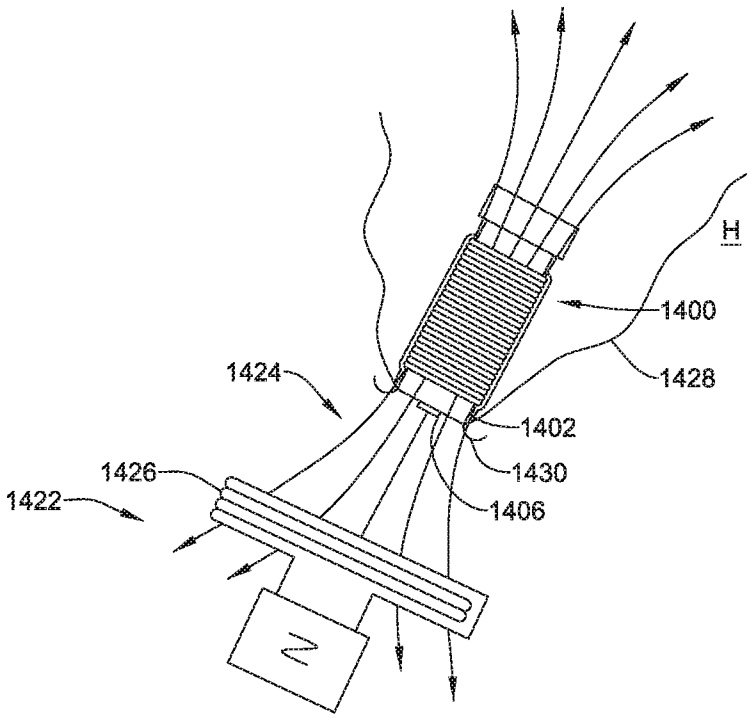

Figure 13B

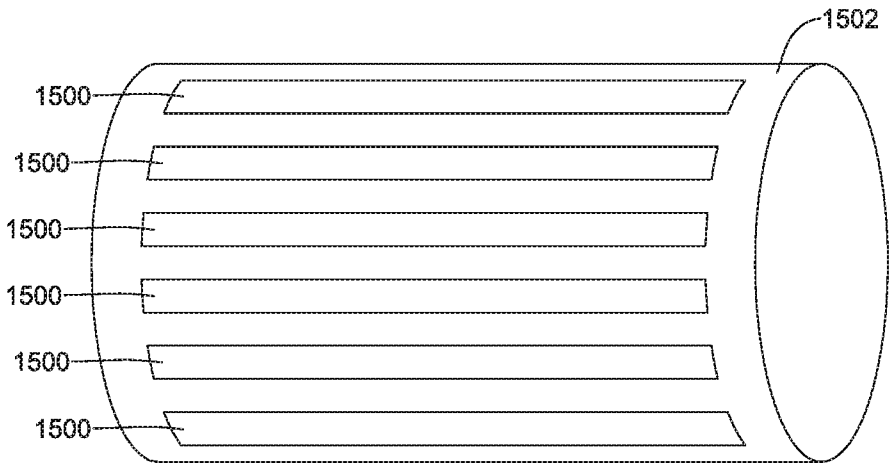

Figure 14

INTERNATIONAL SEARCH REPORT

International application No
PCT/US2017/062583

A. CLASSIFICATION OF SUBJECT MATTER
INV. A61N1/372 A61N1/39 A61N1/375 A61N1/378
ADD.

According to International Patent Classification (IPC) or to both national classification and IPC

B. FIELDS SEARCHED

Minimum documentation searched (classification system followed by classification symbols)
A61N

Documentation searched other than minimum documentation to the extent that such documents are included in the fields searched

Electronic data base consulted during the international search (name of data base and, where practicable, search terms used)
EPO-Internal, WPI Data

C. DOCUMENTS CONSIDERED TO BE RELEVANT

Category*	Citation of document, with indication, where appropriate, of the relevant passages	Relevant to claim No.
X Y	US 2007/123938 A1 (HALLER MATTHEW I [US] ET AL) 31 May 2007 (2007-05-31) abstract; figures 1-3, 6A-B, 8-9 paragraphs [0033] - [0039], [0065] - [0075] -----	1,6-10, 12,13 2-5,11, 14,15
X Y	US 2009/105784 A1 (MASSOUD-ANSARI SONBOL [US] ET AL) 23 April 2009 (2009-04-23) abstract; figures 1-8 paragraphs [0015] - [021,] -----	1-10,12, 13,15 11,14
Y	US 2008/183247 A1 (HARDING WILLIAM C [US]) 31 July 2008 (2008-07-31) abstract; figures 2-8 paragraphs [0030] - [0041], [0047], [0065], [0090] - [0095] -----	2-5,11, 14,15

-/--

[X] Further documents are listed in the continuation of Box C.

[X] See patent family annex.

* Special categories of cited documents :

"A" document defining the general state of the art which is not considered to be of particular relevance

"E" earlier application or patent but published on or after the international filing date

"L" document which may throw doubts on priority claim(s) or which is cited to establish the publication date of another citation or other special reason (as specified)

"O" document referring to an oral disclosure, use, exhibition or other means

"P" document published prior to the international filing date but later than the priority date claimed

"T" later document published after the international filing date or priority date and not in conflict with the application but cited to understand the principle or theory underlying the invention

"X" document of particular relevance; the claimed invention cannot be considered novel or cannot be considered to involve an inventive step when the document is taken alone

"Y" document of particular relevance; the claimed invention cannot be considered to involve an inventive step when the document is combined with one or more other such documents, such combination being obvious to a person skilled in the art

"&" document member of the same patent family

Date of the actual completion of the international search	Date of mailing of the international search report
15 February 2018	27/02/2018

Name and mailing address of the ISA/	Authorized officer
European Patent Office, P.B. 5818 Patentlaan 2 NL - 2280 HV Rijswijk Tel. (+31-70) 340-2040, Fax: (+31-70) 340-3016	Lahorte, Philippe

1

Form PCT/ISA/210 (second sheet) (April 2005)

INTERNATIONAL SEARCH REPORT

International application No
PCT/US2017/062583

C(Continuation). DOCUMENTS CONSIDERED TO BE RELEVANT

Category*	Citation of document, with indication, where appropriate, of the relevant passages	Relevant to claim No.
A	US 2006/085041 A1 (HASTINGS ROGER N [US] ET AL) 20 April 2006 (2006-04-20) abstract; figures 1, 2A-B, 3, 7-8, 18A-C paragraphs [0049] - [0066], [0163] - [0166]	1-15
X	CN 104 548 346 A (UNIV JIANGSU SCIENCE & TECH) 29 April 2015 (2015-04-29) abstract; figures 1-5	1,13

1

INTERNATIONAL SEARCH REPORT

Information on patent family members

International application No
PCT/US2017/062583

Patent document cited in search report	Publication date	Patent family member(s)	Publication date
US 2007123938 A1	31-05-2007	NONE	
US 2009105784 A1	23-04-2009	US 2009105784 A1	23-04-2009
		WO 2009052480 A2	23-04-2009
US 2008183247 A1	31-07-2008	US 2008183247 A1	31-07-2008
		US 2010312309 A1	09-12-2010
		WO 2009094317 A2	30-07-2009
US 2006085041 A1	20-04-2006	CA 2584497 A1	27-04-2006
		EP 1835962 A1	26-09-2007
		EP 2929908 A1	14-10-2015
		JP 5074926 B2	14-11-2012
		JP 2008516739 A	22-05-2008
		US 2006085041 A1	20-04-2006
		US 2006085042 A1	20-04-2006
		US 2007219590 A1	20-09-2007
		WO 2006045073 A1	27-04-2006
CN 104548346 A	29-04-2015	NONE	