Feb. 21, 1961 W. T. SUTTON, JR 2,972,713

CIRCUIT ELEMENT CONSTRUCTION

Filed June 25, 1958

Fig. 1.

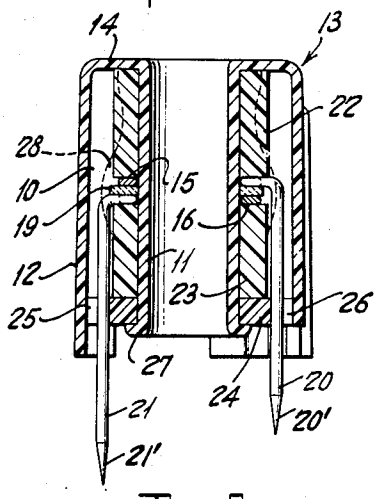

Fig. 2.

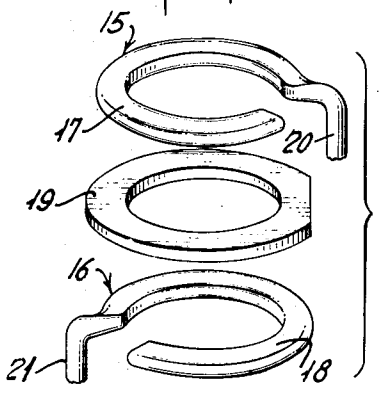

Fig. 3.

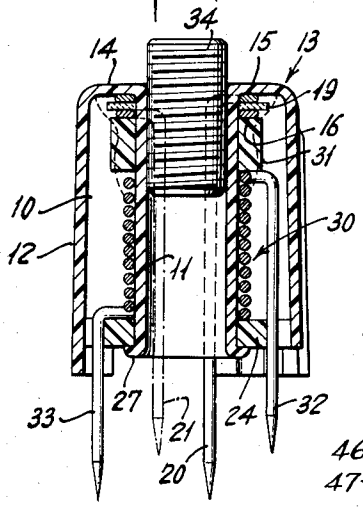

Fig. 5.

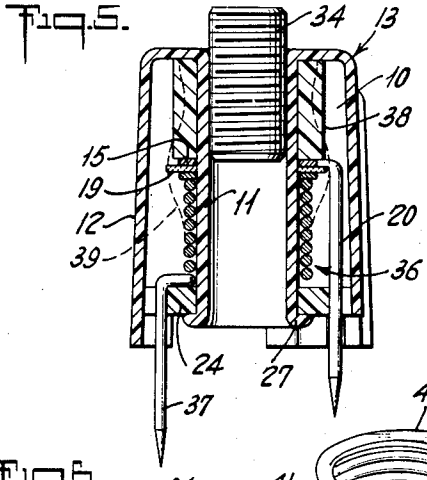

Fig. 6.

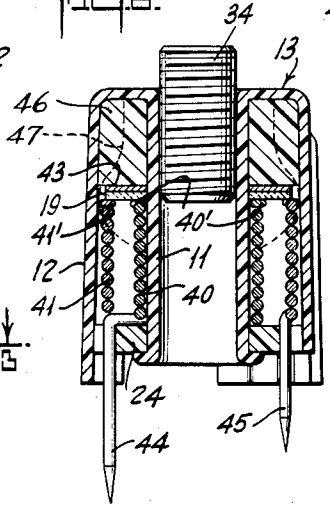

Fig. 4.

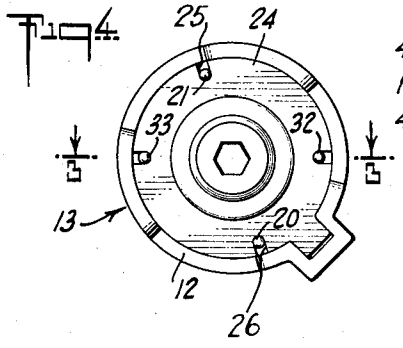

Fig. 7.

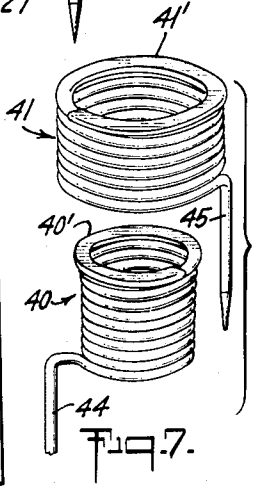

INVENTOR
WALTER T. SUTTON, JR.
BY
Mitchell & Becker
ATTORNEYS

United States Patent Office 2,972,713 Patented Feb. 21, 1961

2,972,713

CIRCUIT ELEMENT CONSTRUCTION

Walter T. Sutton, Jr., Lexington, Ky., assignor to Essex Electronics, Berkeley Heights, N.J., a corporation of New Jersey

Filed June 25, 1958, Ser. No. 744,463

21 Claims. (Cl. 323—74)

My invention relates to an improved electrical circuit-element construction, rendering the same particularly useful in the automatic assembly of such circuit elements into circuits, as into printed circuits. This application is closely related in its application to the coil and transformer structures disclosed in copending Goldsmith application, Serial No. 626,175, filed December 4, 1956, now Patent No. 2,836,805.

It is an object of the invention to provide an improved construction of the character indicated.

It is another object to provide an improved electrical circuit-element construction which lends itself with equal facility to the fabrication of capacitors or resistors.

It is a further object to achieve the above objects with a structure which lends itself to combination with coil elements in the same unit structure.

It is a specific object to achieve the above objects with a construction in which the internal parts of the component electrical elements are themselves the mounting prongs, of strength adequate to proivde the substantial mounting support for the entire circuit-element combination.

It is in general an object to meet the above objects with an extremely rugged and simple device which can achieve or exceed the electrical performance of previous constructions, and which may be so rugged and permanent as to constitute a trouble-free component for the life of the circuit in which it is embodied.

Other objects and various further features of novelty and invention will be pointed out or will occur to those skilled in the art from a reading of the following specification, taken in conjunction with the accompanying drawings. In said drawings, which show, for illustrative purposes only, preferred forms of the invention:

Fig. 1 is a vertical sectional view of a circuit-element assembly embodying features of the invention;

Fig. 2 is an exploded view in perspective illustrating internal parts of the structure of Fig. 1;

Fig. 3 is a view similar to Fig. 1, but illustrating a modification;

Fig. 4 is a bottom end view of the structure of Fig. 3;

Figs. 5 and 6 are further vertical sectional views illustrating other embodiments; and

Fig. 7 is an exploded view in perspective illustrating parts of the internal structure of Fig. 6.

Briefly stated, my invention contemplates application to the construction of coils, transformers, chokes and the like for use in electronic circuit assemblies, as, for example, in the IF amplifier of a television set. The invention teaches integral formation of the turns or other internal parts of the circuit element component with the mounting leads or prongs, and for this purpose employs relatively heavy stiff wire for such parts. The assembly is made rugged and adaptable to receive an adjustably positioned magnetic core by securing the same in a cup-shaped plastic housing, closure being completed by a cap, as upon permanent deformation of plastic parts into permanent mutually locating relation.

The present invention is concerned primarily with a basic structure applicable with equal facility to the construction of capacitor elements or resistor elements, alone or in combination with coil elements. In the case of capacitor and resistor applications, relatively heavy stiff wire is employed to form separate first and second electrical terminal members, each of which comprises a major fraction of a full turn thereof available for contact with a ring-shaped dielectric element or with a resistance element, as the case may be. One end of each of these wires is bent and integrally formed to extend out the open end of the housing and to serve as the substantial mounting support for the completed component. Means are provided for holding the parts in permanently assembled relation to an extent that electrical performance is not impaired even in the presence of tumbling, as when handling for automated assembly into a printed circuit.

Referring to Figs. 1 and 2 of the drawings, my invention is shown in application to a structural organization applicable with equal facility to the provision of a capacitance element or of a resistance element. The important parts of this element are received within an annular space defined between inner and outer tubular parts **11—12** of a cup-shaped housing **13**, closed at **14** and open at the other end. Referring more particularly to Fig. 2, the important electrical parts of my new circuit element comprise first and second electrical terminal members **15—16** of relatively heavy and stiff wire and formed with electrode or contact parts representing in each case a major fraction of a full turn in essentially a radial plane. To improve contact effectiveness, the electrode or contact parts are preferably flattened, as indicated at **17—18**, so that contact with an intermediate dielectric or resistance material member **19** may be as extensive as possible. One end of each of the terminal members **15—16** is integrally formed with a straight lead part **20—21**, offset radially to avoid interference with other parts of the structure and extending substantially parallel to the central axis at angularly spaced locations. The lead parts **20—21** project axially out and beyond the open end of the housing **13** and serve as mounting prongs and lead connections to the circuit element.

The terminal members **15—16** are formed from relatively heavy and stiff insulated wire, which may be heavy plastic-coated copper magnet wire or "Copperweld" (copper-sheathed steel wire). This wire is preferably of a size and stiffness sufficiently rugged to permit projecting ends **20—21** to serve as the mounting pins for the finished structure so that no soldering or other connection to separate mounting pins is necessary to integrate the circuit component into its ultimate chassis.

For convenience in mounting, the leads **20—21** may be nail pointed by employing conventional machinery, but I indicate my preference that the projecting ends **20—21** shall be merely dipped in a pool of solder and slowly raised so as to develop pointed soldered ends **20'—21'** in the manner of a stalactite, the solder being further desirable for ultimate permanent assembly into a printed circuit. The leads **20—21** may project for different axial lengths as shown, thereby providing unambiguous terminal identification.

For situations in which the circuit element of Figs. 1 and 2 is a capacitor, the annular member **19** interposed between the terminal members **15—16**, consists of a mica, polystyrene or other suitable dielectric that has been conductively coated on its opposed flat sides to achieve good contact with the terminal members. Such conductive coating may be applied by silk-screening silver or by evaporating aluminum, or by employing other well-known techniques. Good contact with the terminal members

15—16 is assured by stripping the insulation from the contact areas 17—18, and by tinning the same with solder.

For situations in which the circuit element of Figs. 1 and 2 is a resistor, the annular member 19 is of course formed of resistive material, and the lead or terminal members 15—16 may be tinned as previously indicated. The member 19 may be a molded element of a plastic resistive material, as, for example, an epoxy-resin binder premixed with carbon black. This composition is molded under heat and pressure to obtain the size and shape illustrated, thereby achieving a rigid mechanical construction, and in order to obtain good electrical contact to the element 19, the opposite faces thereof are suitably coated with conductive material, as by the silk-screening or evaporated-metal processes indicated above for the case of the capacitor.

It is sufficient for most purposes that the terminal members 15—16 be held in tight sandwiched relation with the annular member 19 relied upon for the desired electrical performance, no soldering connection being necessary to achieve such performance. In the particular arrangement shown, adequate axially retaining pressure is achievable by mounting the sandwich 15—19—16 between electrically insulating spacer members or collars 22—23, the inner collar 22 being seated at the bottom of the space 10, and the outer collar 23 serving to provide a seat for a closure-cap member 24. The cap member 24 happens to be shown also in Fig. 4 in connection with the structure of Fig. 3, but will be seen to have a plurality of lead-locating recesses at angularly spaced locations, the recesses 25—26 being employed to locate leads 21—20. Permanent assembly is achieved by permanently deforming a bottom projecting end 27 of the inner tubular portion 11 of the housing into radially overlapping relation with the closure cap 24. This operation is preferably performed under conditions of relatively strong axial pressure of the cap 24 against the bottom 14 of the housing 13 so as to assure good, permanent electrical contact of the parts 15—19—21.

As indicated above, I have found that it is adequate to secure the parts in assembled relation merely by forming the retaining bead 27 under axial-pressure conditions. If desired, however, even more permanent relation of the parts can be achieved if the spacer elements 22—23 are of a plastic material having a lower melting point than the material of the casing or housing 13, said melting point being also lower than that for the element 19. Under such circumstances, transient localized heating of the elements 15—16 will result in local melting of adjacent parts of the spacers 22—23, and if this transient heating is properly timed (this being readily achievable when induction-heating techniques are employed), the parts may be fully consolidated to each other, the consolidated mass assuming some other contour as suggested by the dashed outline 28.

In Fig. 3, I illustrate a further employment of the principles of the invention, wherein a capacitor element of the nature already described is combined with a coil element in a single housing 13. Because of the similarity of parts with those already identified, corresponding reference numerals are employed. The coil 30 may be of heavy stiff insulated wire (as used for elements 15—16) and may be of the type described in greater detail in said copending application; coil 30 is preferably of an axial length substantially less than the overall axial length of the housing 13, so as to permit axially spaced assembly of the elements 15—19—16 and of the coil 30 on one of the tubular members 11—12 of the housing 13. In the form shown, both the elements 15—19—16 and the coil 30 are received upon and concentrically supported by the inner tubular member 11, and their axially spaced relation is determined by a spacer element or collar 31. As explained in said copending application, the ends of the coil 30 are bent axially at spaced locations and they integrally form mounting prongs and lead connections to the coil. The inner axial end of the coil 30 thus projects externally to define the leads 32, and the outer axial end of the coil 30 similarly projects to define the lead 33. Leads 25—26—32—33 are seen in Fig. 4 to be held by cap 24 in angularly spaced relation.

It has been indicated generally above that I prefer to mount the coil 30 near the open end of the container. This leaves at the closed end a substantially unwound portion into which a tuning slug 34 of ferromagnetic material may be received and axially adjusted. The mere fact that this slug extends within the element 15—19—16 in no way impairs electrical performance, and the same range of flexibility in tuning adjustment for the coil 30 is achieved, even for situations in which the element 15—19—16 is a capacitor.

In the embodiment of Fig. 5, many of the parts of Fig. 3 will be recognized and have therefore been given the same reference numerals. The embodiment of Fig. 5 represents a multiple-element component wherein a coil is in series with a resistor or a capacitor, depending upon the nature of the element 19. In the structure of Fig. 5, the coil element 36 is again preferably of substantially lesser axial extent than the housing 13, and is mounted near the open end of the same. The principal difference in structure resides in the fact that the axially inner end of the coil 36 is cut off (and preferably locally flattened, as shown) at the last winding turn and is tinned for substantial peripheral contact with the adjacent coated surface of the annular member 19. If such member 19 is of dielectric material, then a capacitance is formed between the axially inner end of coil 36 and the terminal member 15, which has already been described in connection with Figs. 1 and 2. It will be understood that in the situation depicted in Fig. 5, the axially inner end of the coil 36 may be viewed as a terminal member, and the wire from which such terminal member is formed is integrally formed at one end, namely, at the axially outer end, with a straight axially projecting mounting prong and lead structure 37 projecting beyond the open end and nevertheless integral with the coil 36.

In the form shown, a spacer 38 provides a reference against which axial preloading forces may be established upon securing the cap 24, permanent deformation being achieved at a bead or roll-over edge 27, as previously described. If desired, permanently bonded relation of the parts may be achieved by localized induction or other heating so as to locally melt a spacer 38 of relatively low melting plastic material, the ultimate bonded contour being somewhat of the shape indicated at 39.

The arrangement of Fig. 6 resembles that of Fig. 5, except that each of the terminal members is formed as part of a separate coil structure, there being an inner coil 40 concentrically supported on the inner tubular member 11 and an outer coil 41 deriving concentric support from the outer tubular member 12. The terminal-member parts 40'—41' for these coils are in substantially the same radial plane, and the element 19 of resistive or dielectric material is in radially overlapping relation with both elements 40'—41'. If both sides of the member 19 are conductively coated, as described in connection with Figs. 1 and 2 (the upper suface of member 19 being continuously conductively coated, and the lower surface being coated over concentric but radially spaced surfaces adjacent the respective contact members 40'—41'), then upon the axially preloaded assembly of coils 40—41 to the member 19, a series capacitance-inductance or resistance-inductance circuit element will have been established. However, for a simplified discussion in connection with the drawing, I show the employment of a separate plate 43 of conducting material representing the other plate of the capacitor or other side of the resistor, depending upon whether the element 19 is of dielectric or of resistive material. The minimum radial spacing between terminal members 40' and 41' (and, likewise, the minimum radial spacing of any adjacent concentric con-

tact areas on the underside of member 19) should, of course, be substantially in excess of the effective axial thickness of the member 19, so as to assure that capacitance (or resistance) between 40'—43 and 41'—43 will dominate the electrical performance. As described in connection with the coil of Fig. 5, each of the other ends of the coils 40—41 is formed with an integral lead extending axially beyond the open end of the housing 13 and serving as a mounting support for the entire structure. The lead to the inner coil 40 is shown at 44 and to the outer coil is shown at 45, both being located by cap 24. As previously indicated permanent bonding may be assured upon local melting of a low-melting spacer 46, as to an ultimate contour suggested at 47.

It will be seen that I have described improved circuit element constructions lending themselves to mass production and to extreme ruggedness of assembly. The structures are particularly useful for automated assembly into printed circuits, as by employing the same handling apparatus as used for coil structures disclosed in said copending application. Multiple components are achievable in the same structure, and by employing techniques as shown in Fig. 6, it is possible to double the inductance, while still combining circuit element properties with a resistor or with a capacitor element 19.

While the invention has been described in detail in connection with the preferred forms shown, it will be understood that modifications may be made without departing from the scope of the invention as defined in the claims which follow.

I claim:

1. In combination, a plastic cup-shaped housing comprising inner and outer tubular portions joined at one end to define an annular space open to the other end, a first electrical terminal member of relatively heavy and stiff wire and comprising at least a major fraction of a full turn thereof received within said space and deriving concentric support from one of said tubular members, a second electrical terminal member of relatively heavy and stiff wire and comprising at least a major fraction of a full turn thereof received within said space and deriving concentric support from one of said tubular members, an annular member of a material having electrical properties deriving concentric support from one of said tubular members and in radially overlapping contacting relation with both said terminal members, one end of each of said wires including a straight integral lead portion extending out beyond the open end of said housing, and means fixedly holding said terminal members and said annular member in said housing, the weight and stiffness of said wires being such that said projecting wire ends provide the substantial mounting support for said combination.

2. The combination of claim 1, in which said annular member is of a dielectric material.

3. The combination of claim 1, in which said annular member is of a resistance material, the resistance being substantially in excess of the resistance of said terminal members.

4. The combination of claim 1, in which the turns of said terminal members are flattened at the area of contact with said annular member.

5. In combination, a plastic cup-shaped housing comprising inner and outer tubular portions joined at one end to define an annular space open to the other end, a first electrical terminal member of relatively heavy and stiff wire and comprising at least a major fraction of a full turn thereof received within said space and deriving concentric support from one of said tubular members, a second electrical terminal member of relatively heavy and stiff wire and comprising at least a major fraction of a full turn thereof received within said space and deriving concentric support from the said one of said tubular members, said terminal members being in axially opposed adjacent relation, an annular member of a material having electrical properties deriving concentric support from said one tubular member and interposed between said terminal-member turns and of a radial extent to radially overlap and contact both said terminal members, one end of each of said wires including a straight integral lead portion extending out beyond the open end of said housing, and means fixedly holding said terminal members and said annular member in said housing, the weight and stiffness of said wire being such that said projecting wire ends provide the substantial mounting support for said combination.

6. In combination, a plastic cup-shaped housing comprising inner and outer tubular portions joined at one end to define an annular space open to the other end, a first electrical terminal member of relatively heavy and stiff wire and comprising at least a major fraction of a full turn thereof received within said space and deriving concentric support from one of said tubular members, a second electrical terminal member of relatively heavy and stiff wire and comprising at least a major fraction of a full turn thereof received within said space and deriving concentric support from the other of said tubular members, both said turns being in substantially the same radial plane, an annular member of a material having electrical properties deriving concentric support from one of said tubular members and in radially overlapping contacting relation with both said terminal members, one end of each of said wires including a straight integral lead portion extending out beyond the open end of said housing, and means fixedly holding said terminal members and said annular member in said housing, the weight and stiffness of said wires being such that said projecting wire ends provide the substantial mounting support for said combination.

7. In combination, a plastic, cup-shaped housing comprising inner and outer tubular portions joined at one end to define an annular space open to the other end, a first electrical terminal member of relatively heavy and stiff wire and comprising at least a major fraction of a full turn thereof received within said space and deriving concentric support from one of said tubular members, a second electrical terminal member of relatively heavy and stiff wire and comprising at least a major fraction of a full turn thereof received within said space and deriving concentric support from the other of said tubular members, both said turns being in substantially the same radial plane, an annular dielectric member deriving concentric support from one of said tubular members and in radially overlapping contacting relation with both said terminal members, one end of each of said wires including a straight integral lead portion extending out beyond the open end of said housing, and means fixedly holding said terminal members and said annular member in said housing, the weight and stiffness of said wires being such that said projecting wire ends provide the substantial mounting support for said combination.

8. In combination, a plastic, cup-shaped housing comprising inner and outer tubular portions joined at one end to define an annular space open to the other end, a first electrical terminal member of relatively heavy and stiff wire and comprising at least a major fraction of a full turn thereof received within said space and deriving concentric support from one of said tubular members, a second electrical terminal member of relatively heavy and stiff wire and comprising at least a major fraction of a full turn thereof received within said space and deriving concentric support from the other of said tubular members, both said turns being in substantially the same radial plane, an annular electrically resistive member deriving concentric support from one of said tubular members and in radially overlapping contacting relation with both said terminal members, one end of each of said wires including a straight integral lead portion extending out

beyond the open end of said housing, and means fixedly holding said terminal members and said annular member in said housing, the weight and stiffness of said wires being such that said projecting wire ends provide the substantial mounting support for said combination.

9. In combination, a plastic cup-shaped housing comprising inner and outer tubular portions joined at one end to define an annular space open to the other end, a first electrical terminal member of relatively heavy and stiff wire and comprising at least a major fraction of a full turn thereof received within said space and deriving concentric support from one of said tubular members, a second electrical terminal member comprising a coil having a number of turns of relatively heavy and stiff wire received within said space and deriving concentric support from one of said tubular members, an annular member of a material having electrical properties deriving concentric support from one of said tubular members and in radially overlapping contacting relation with one axial end of each of said terminal members, one end of the wire of said first terminal member including a straight integral lead portion extending out the open end of said housing, and the other end of the wire of said coil including a straight integral lead portion angularly spaced from said first lead portion and extending out beyond the open end of said housing, and means fixedly holding said terminal members and said annular member in said housing, the weight and stiffness of said wires being such that said projecting wire ends provide the substantial mounting support for said combination.

10. In combination, a plastic cup-shaped housing comprising inner and outer tubular portions joined at one end to define an annular space open to the other end, a first electrical terminal member comprising a coil of relatively heavy and stiff wire received within said space and deriving concentric support from one of said tubular members, a second electrical terminal member comprising a coil of relatively heavy and stiff wire received within said space and deriving concentric support from one of said tubular members, an annular member of a material having electrical properties deriving concentric support from one of said tubular members and in radially overlapping contacting relation with one end of each of said terminal members, the other end of each of said terminal members including a straight integral lead portion extending out beyond the open end of said housing, and means fixedly holding said terminal members and said annular member in said housing, the weight and stiffness of said wires being such that said projecting wire ends provide the substantial mounting support for said combination.

11. The combination of claim 10, in which said coils are coaxial.

12. The combination of claim 10, in which one of said coils derives concentric support from one of said tubular portions, and the other of said coils derives concentric support from the other of said tubular portions.

13. The combination of claim 10, in which said coils are coaxially supported within said space, the axially inner ends of said coils being in substantially the same radial plane, said annular member comprising an electrically conductive layer and dielectric means interposed between said layer and the adjacent ends of said coil.

14. In combination, a plastic cup-shaped housing comprising inner and outer tubular portions joined at one end to define an annular space open to the other end, a first electrical terminal member of relatively heavy and stiff wire and comprising at least substantially a full turn thereof received within said space and deriving concentric support from the inner of said tubular members, a second electrical terminal member of relatively heavy and stiff wire and comprising substantially a full turn thereof received within said space and deriving concentric support from said inner tubular member, an annular electrically resistive member deriving concentric support from said inner tubular member and axially interposed between said electrical terminal members, abutment means within said space and defining an inner insertion limit for the axially inner one of said terminal members, and closure means for the open end of said housing and compressing said terminal members against said annular member in permanent relation, one end of each of said wires including a straight integral lead portion extending through said closure means and out beyond the open end of said housing, the weight and stiffness of said wires being such that said projecting wire ends provide the substantial mounting support for said combination.

15. In combination, a plastic cup-shaped housing comprising inner and outer tubular portions joined at one end to define an annular space open to the other end, a first electrical terminal member of relatively heavy and stiff wire and comprising at least substantially a full turn thereof received within said space and deriving concentric support from the inner of said tubular members, a second electrical terminal member of relatively heavy and stiff wire and comprising substantially a full turn thereof received within said space and deriving concentric support from said inner tubular member, an annular dielectric member deriving concentric support from said inner tubular member and axially interposed between said electrical terminal members, abutment means within said space and defining an inner insertion limit for the axially inner one of said terminal members, and closure means for the open end of said housing and compressing said terminal members against said annular member in permanent relation, one end of each of said wires including a straight integral lead portion extending through said closure means and out beyond the open end of said housing, the weight and stiffness of said wires being such that said projecting wire ends provide the substantial mounting support for said combination.

16. In combination, a plastic cup-shaped housing comprising inner and outer tubular portions joined at one end to define an annular space open to the other end, a first electrical terminal member of relatively heavy and stiff wire and comprising at least substantially a full turn thereof received within said space and deriving concentric support from the inner of said tubular members, a second electrical terminal member of relatively heavy and stiff wire and comprising substantially a full turn thereof received within said space and deriving concentric support from said inner tubular member, an annular member of a material having electrical properties deriving concentric support from said inner tubular member and in radially overlapping contacting relation with both said terminal members and axially interposed therebetween, said terminal members being disposed at the axially inner part of said space, a winding of relatively heavy and stiff wire of lesesr axial extent than the depth of said space and of relatively heavy and stiff wire deriving concentric support from said inner tubular member near the open end thereof, spacer means of insulating material axially separating said terminal members from said coil, one end of each of the wires of said terminal members and both ends of said coil including straight integral lead portions angularly spaced with respect to each other and extending out beyond the open end of said housing, and means fixedly holding said terminal members and said annular member in said housing, the weight and stiffness of said wires being such that said projecting wire ends provide the substantial mounting support for said combination.

17. The combination of claim 16, and including a core member of ferromagnetic material adjustably received in the bore of said inner tubular portion.

18. In combination, a plastic cup-shaped housing, comprising inner and outer tubular portions joined at one end to define an annular space open to the other end, a first electrical terminal member of relatively heavy and stiff wire and comprising substantially a full turn

thereof received within said space and deriving concentric support from the inner of said tubular members, a second electrical terminal member of relatively heavy and stiff wire and comprising a multi-turn coil received within said space and deriving concentric support from said inner tubular member, said coil being of axial extent substantially less than the axial extent of said housing and being received on said inner tubular member near the open end of said housing, an annular member of a material having electrical properties deriving concentric support from said inner tubular member and axially interposed between said terminal members, means axially securing said terminal members in permanent sandwiched relation with respect to said annular member, one end of each of said wires including the straight integral lead portion extending out beyond the open end of said housing, the weight and stiffness of said wires being such that said projecting wire ends provide the substantial mounting support for said combination.

19. The combination of claim 18 and including a core element of ferromagnetic material adjustably received in the bore of said inner tubular member near the closed end of said container.

20. In combination, a plastic cup-shaped housing comprising inner and outer tubular portions joined at one end to define an annular space open to the other end, a first electrical terminal member of relatively heavy and stiff wire and comprising a multi-turn coil received within

said space and deriving concentric support from one of said tubular members, a second electrical terminal member of relatively heavy and stiff wire and comprising a multi-turn coil received within said space and deriving concentric support from the other of said tubular members, both said coils being of axial length substantially less than the axial extent of said housing and both said coils being supported near the open end of said housing with the axially inner limits of said coils in substantially the same radial plane, whereby a substantial unwound axial length of said housing is defined at the inner end thereof, a dielectric washer radially overlapping both inner ends of said coils and in contact therewith, an electrically conductive layer axially inward of said dielectric washer and in radially overlapping relation with the inner ends of both coils, means fixedly holding said conductive layer in compressed relation against the inner ends of said coils via said dielectric washer, the weight and stiffness of said wires being such that said projecting wire ends provide the substantial mounting support for said combination, the axially outer end of each said coil including a straight integral lead portion extending out the open end of said housing.

21. The combination of claim 20, and including a core member of ferromagnetic material adjustably received in the bore of said inner tubular member near the closed end of said housing.

No references cited.