United States Patent

Anstin

[15] **3,697,680**

[45] **Oct. 10, 1972**

[54] **STORAGE AND RETRIEVAL SYSTEM**

[72] Inventor: **Wayne D. Anstin,** Cupertino, Calif.

[73] Assignee: **Varian Adco,** Palo Alto, Calif.

[22] Filed: **Feb. 2, 1970**

[21] Appl. No.: **7,884**

[52] **U.S. Cl.**.....**178/6.8,** 340/174.1 C, 178/DIG. 1, 214/16.4 A

[51] **Int. Cl.**.....**B65g 1/06**

[58] **Field of Search**.....214/16.4 A, 16.4 R; 178/6, 178/6.8

[56] **References Cited**

UNITED STATES PATENTS

2,918,656	12/1959	Nolde et al.	235/61.114
3,034,643	5/1962	Keller	340/174.1

Primary Examiner—Gerald M. Forlenza
Assistant Examiner—R. Johnson
Attorney—Flehr, Hohbach, Test, Albritton & Herbert

[57] **ABSTRACT**

Documents or information in the form of microfilm or other permanent form are mounted on rectangular frames or carriers which are edge coded by notching. A plurality of carriers are stored in one or more elongated storage bins with the bins arranged side-by-side. An electromechanical carriage is adapted to move to a selected bin and then to move over the selected bin to store or retrieve carriers. During retrieval, the coded edges are scanned and an electrical control starts a retrieval cycle to retrieve the carrier having the desired document. The carrier is transported to a display location where the document or information is read and made available for use as a display, hard copy, or video signal. The electrical control includes a memory which remembers the bin location of each carrier whereby the bin containing the desired carrier is selected and scanned to locate the desired carrier. In refiling, the bin from which the carriers were removed is selected and the carriers are filed sequentially in open locations.

23 Claims, 27 Drawing Figures

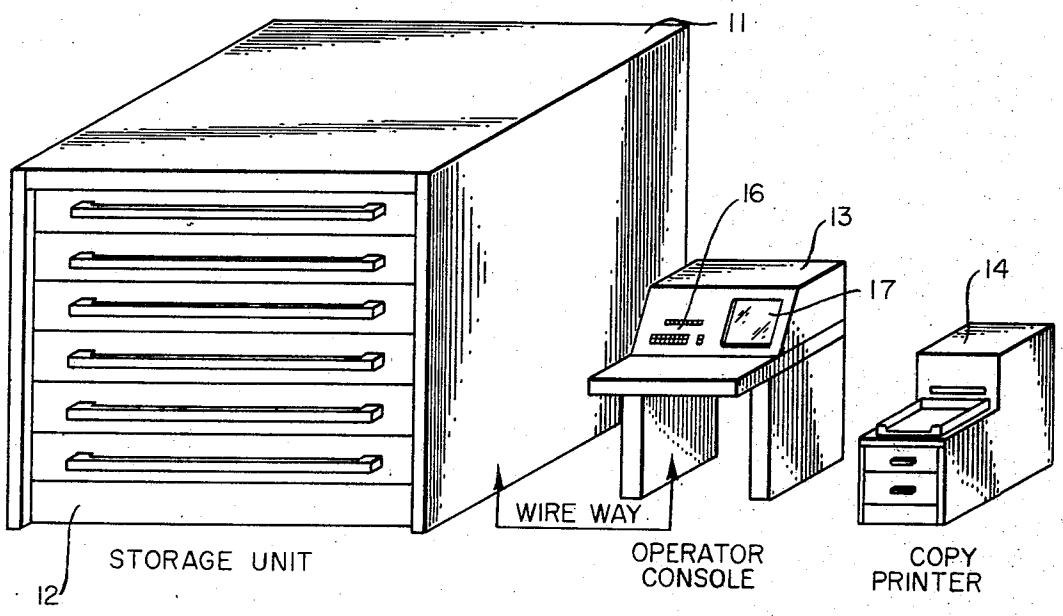

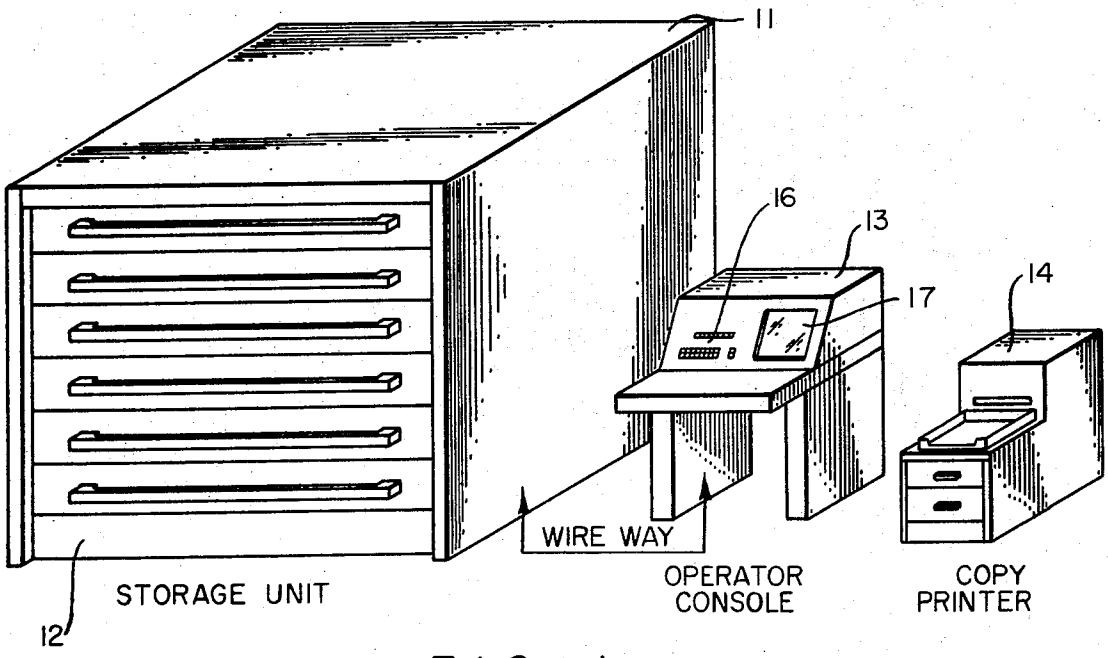

FIG. 1

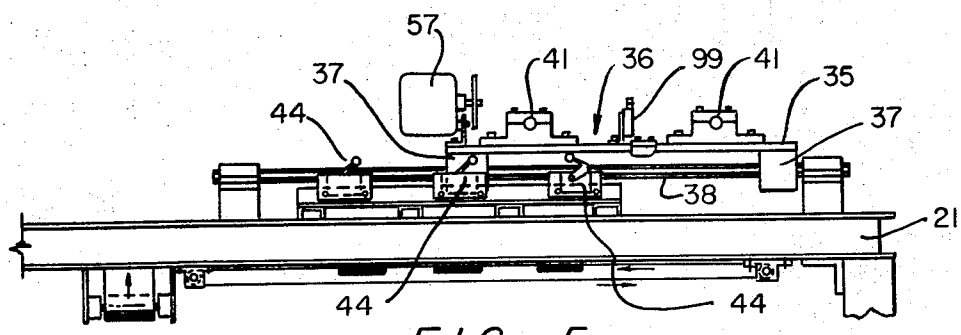

FIG. 5

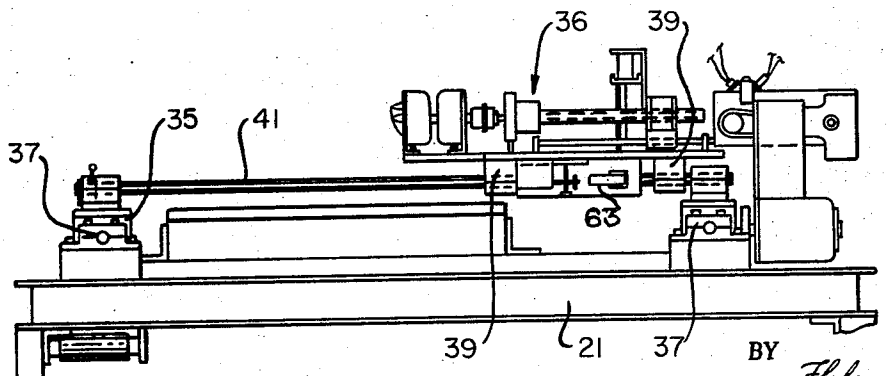

FIG. 6

WAYNE D. ANSTIN
INVENTOR

BY Flehr, Hohbach, Test, Albritton and Herbert
ATTORNEYS

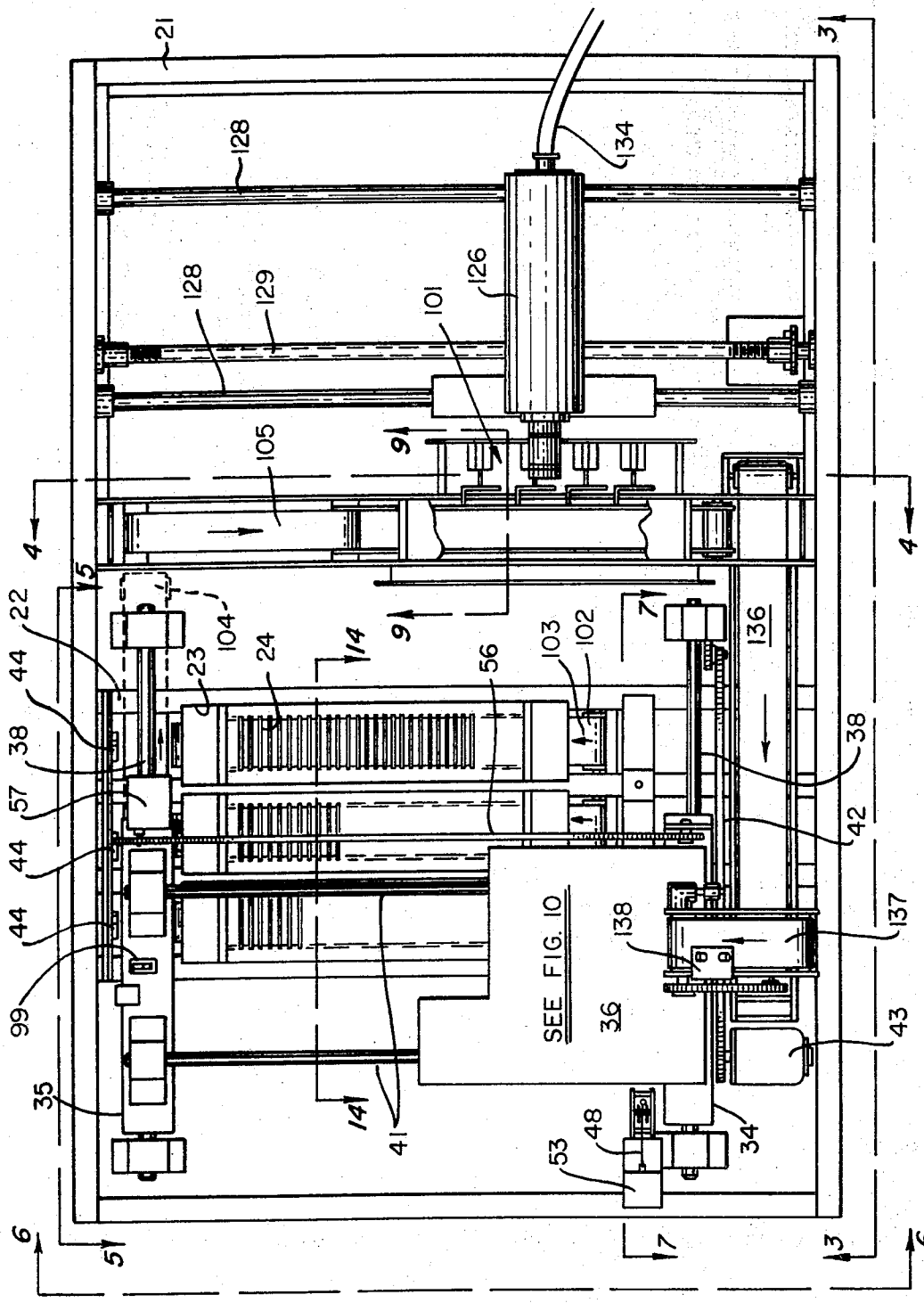

FIG. 2

INVENTOR.
WAYNE D. ANSTIN

BY Flehr, Hohbach, Test, Albritton and Herbert
ATTORNEYS

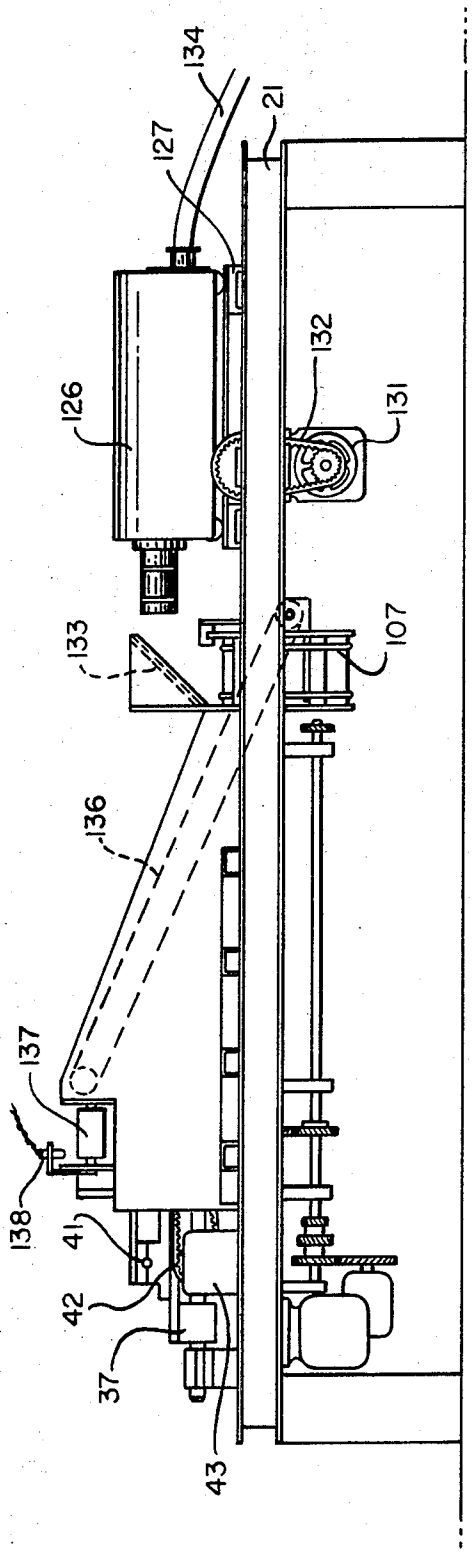

FIG. 3

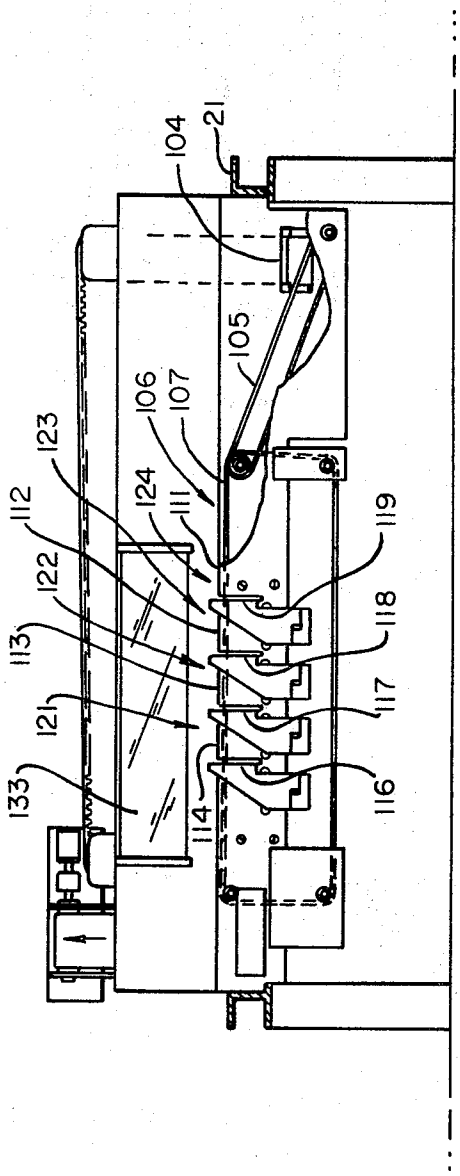

FIG. 4

WAYNE D. ANSTIN
INVENTOR.

BY Flehr, Hohbach, Test, Albritton and Herbert
ATTORNEYS

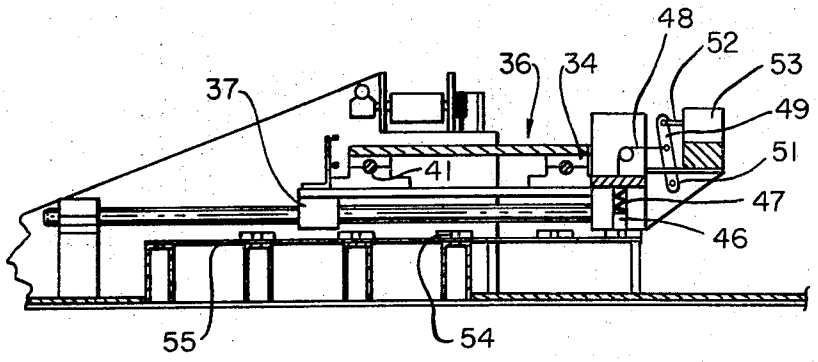

FIG. 7

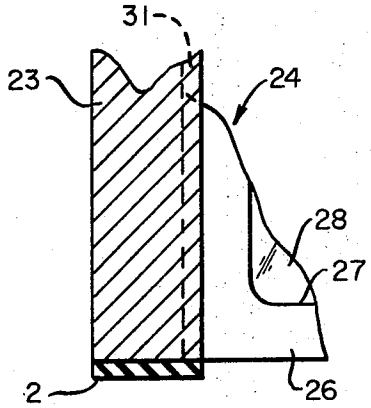

FIG. 8A

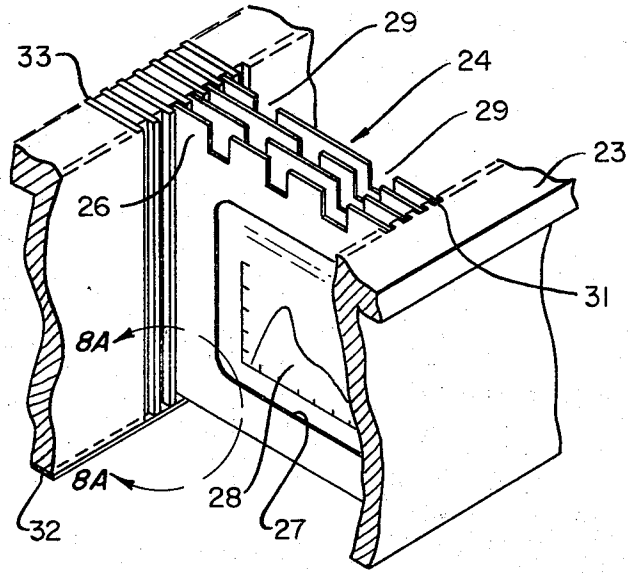

FIG. 8

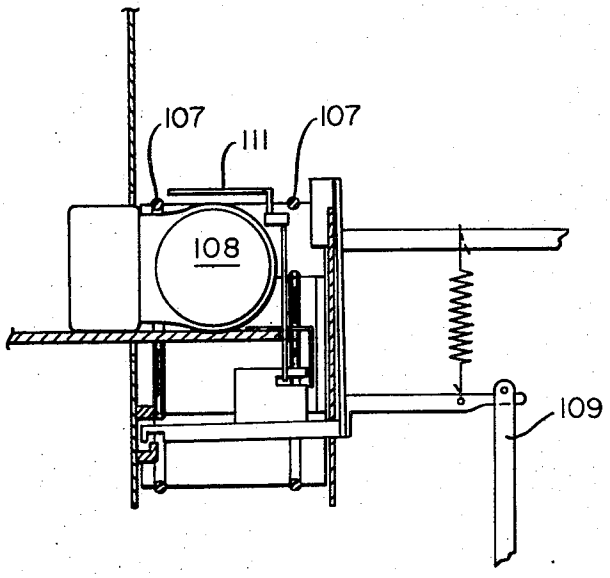

FIG. 9

WAYNE D. ANSTIN
INVENTOR.

BY Fehr, Hohbach, Test, Albritton and Herbert
ATTORNEYS

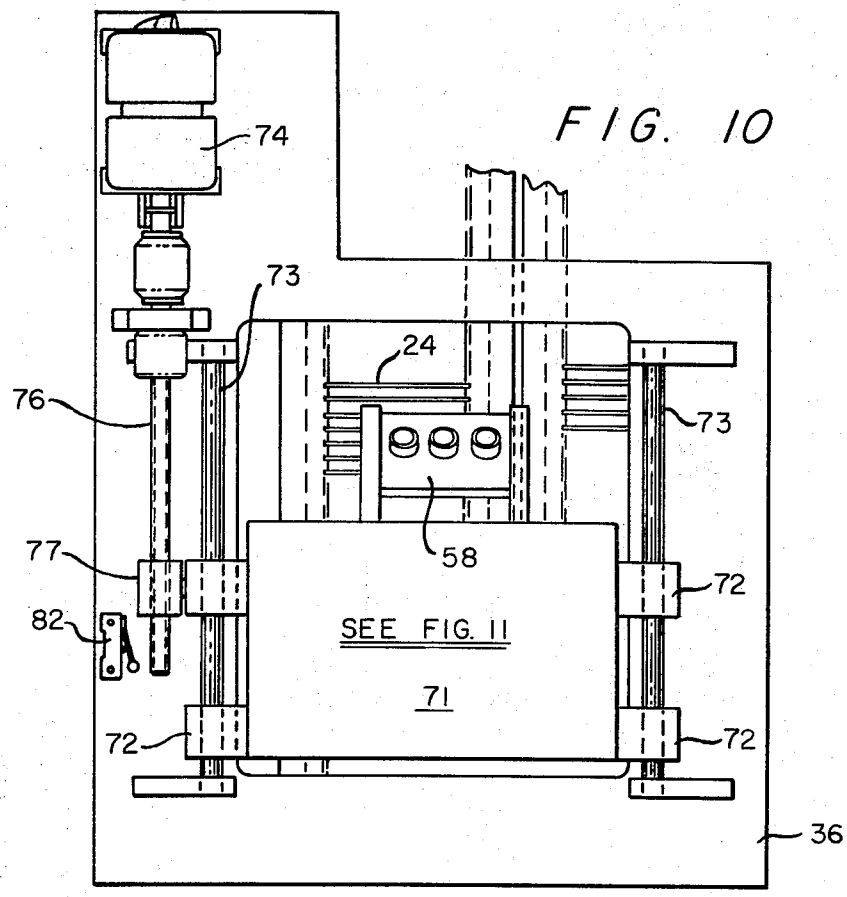

FIG. 10

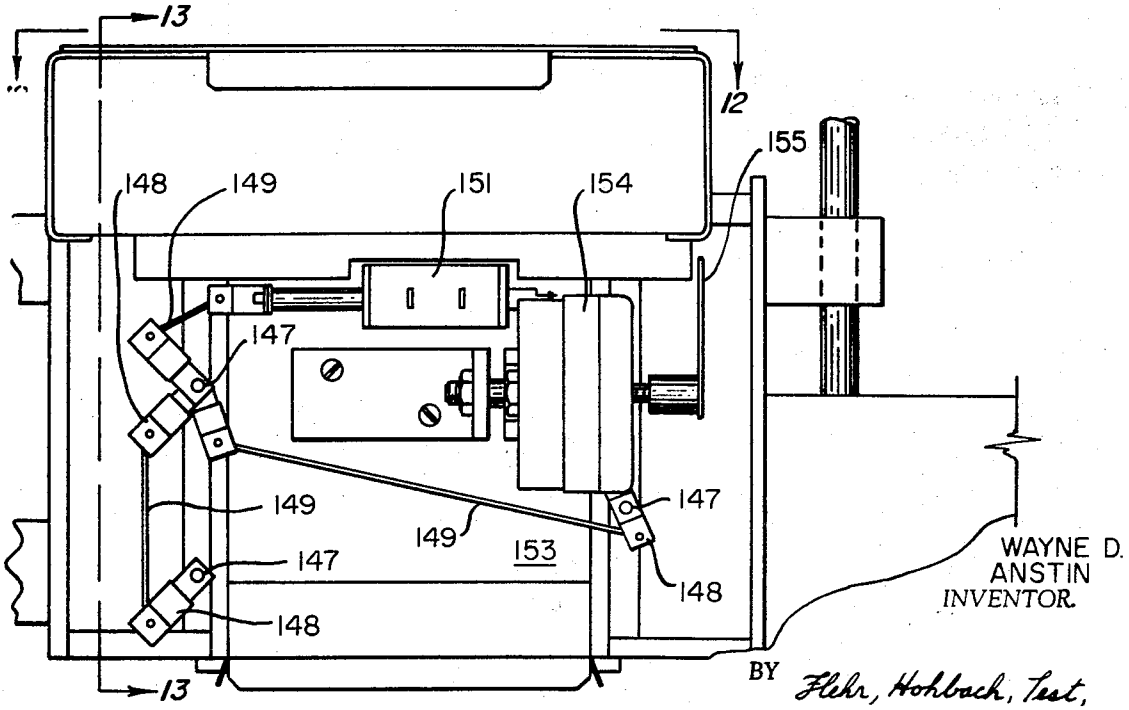

FIG. 11

WAYNE D. ANSTIN
INVENTOR.

BY Flehr, Hohbach, Test, Albritton and Herbert
ATTORNEYS

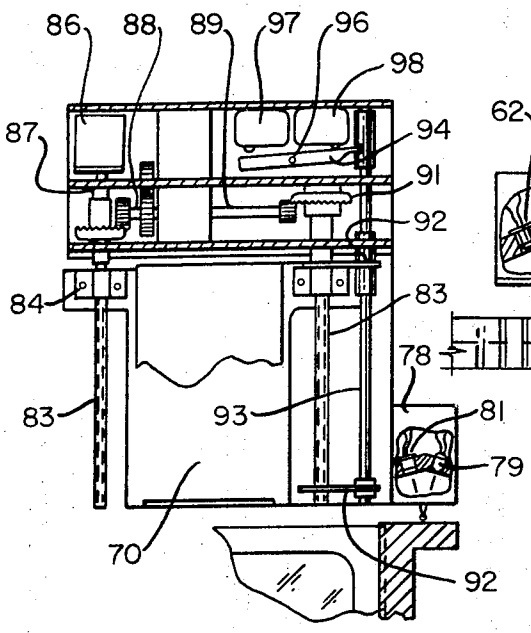

FIG. 12

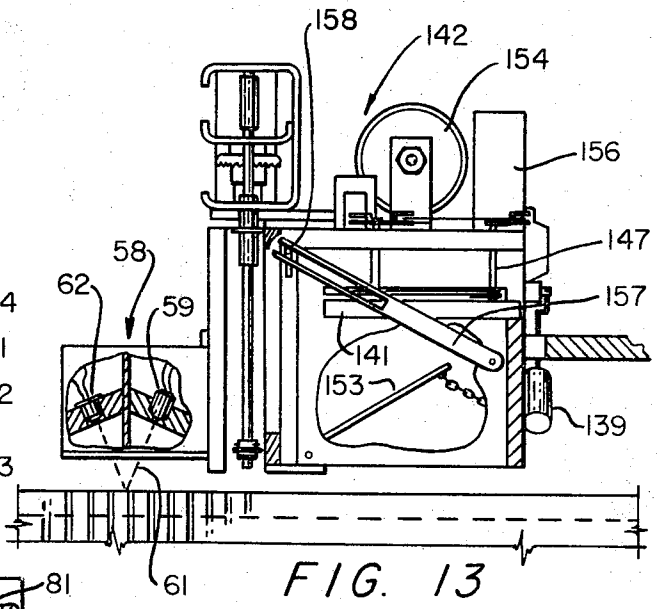

FIG. 13

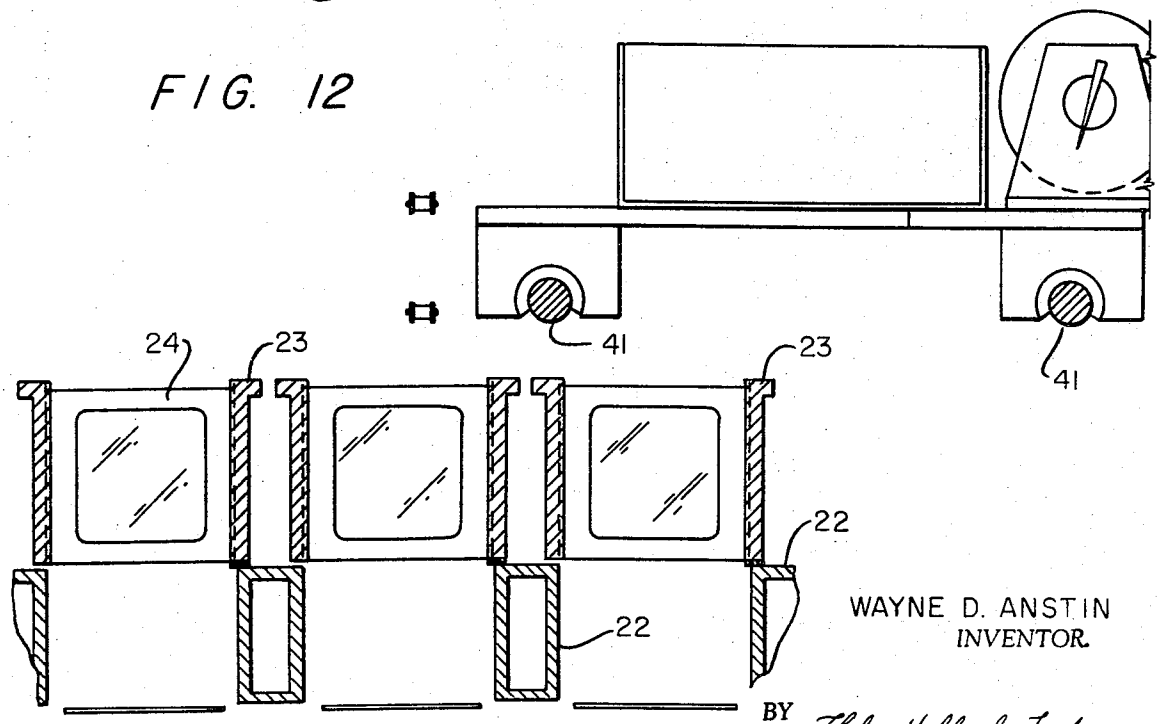

FIG. 14

WAYNE D. ANSTIN
INVENTOR.

BY Flehr, Hohbach, Test, Albritton and Herbert
ATTORNEYS

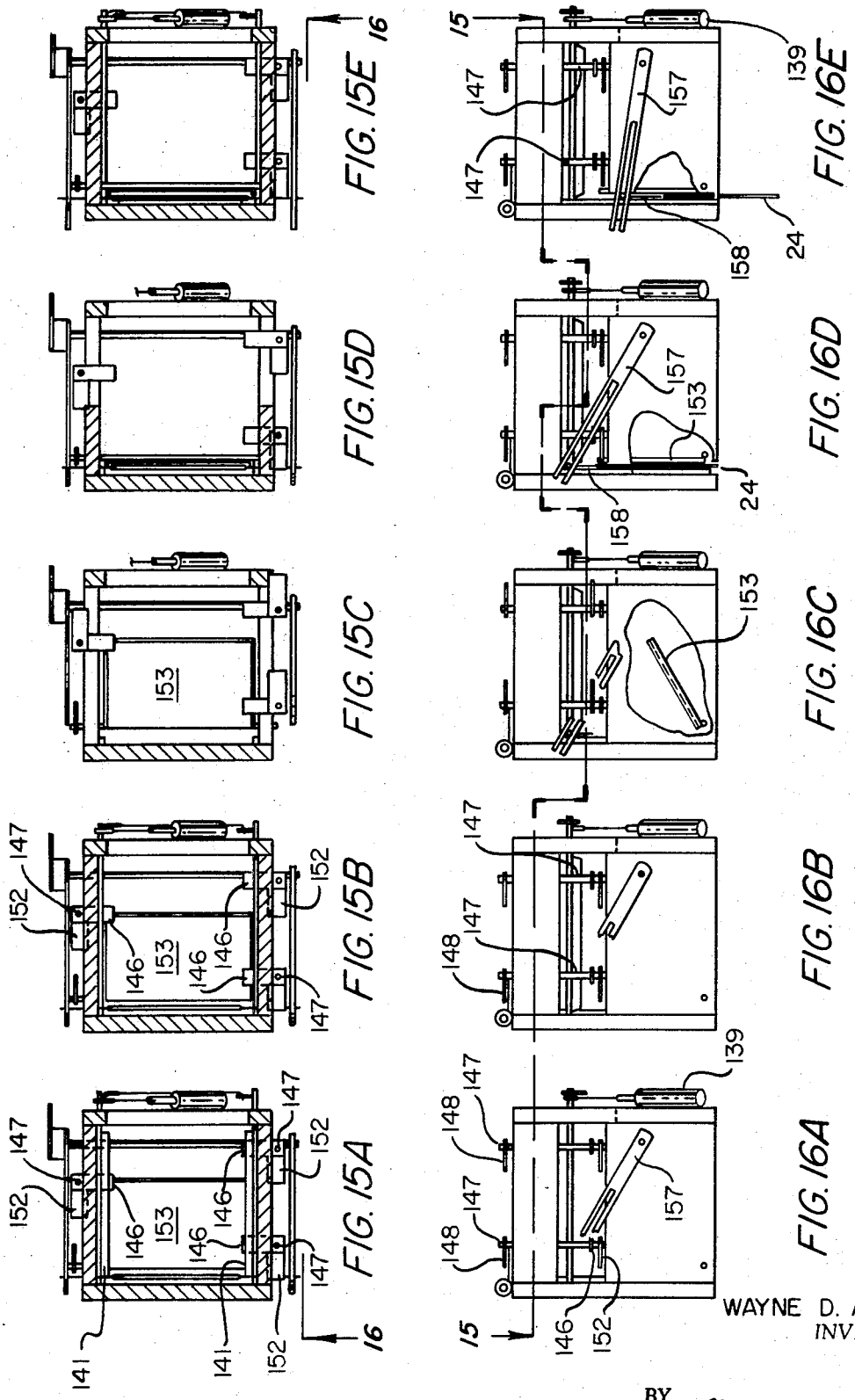

WAYNE D. ANSTIN
INVENTOR

BY Flehr, Hohbach, Test, Albritton and Herbert
ATTORNEYS

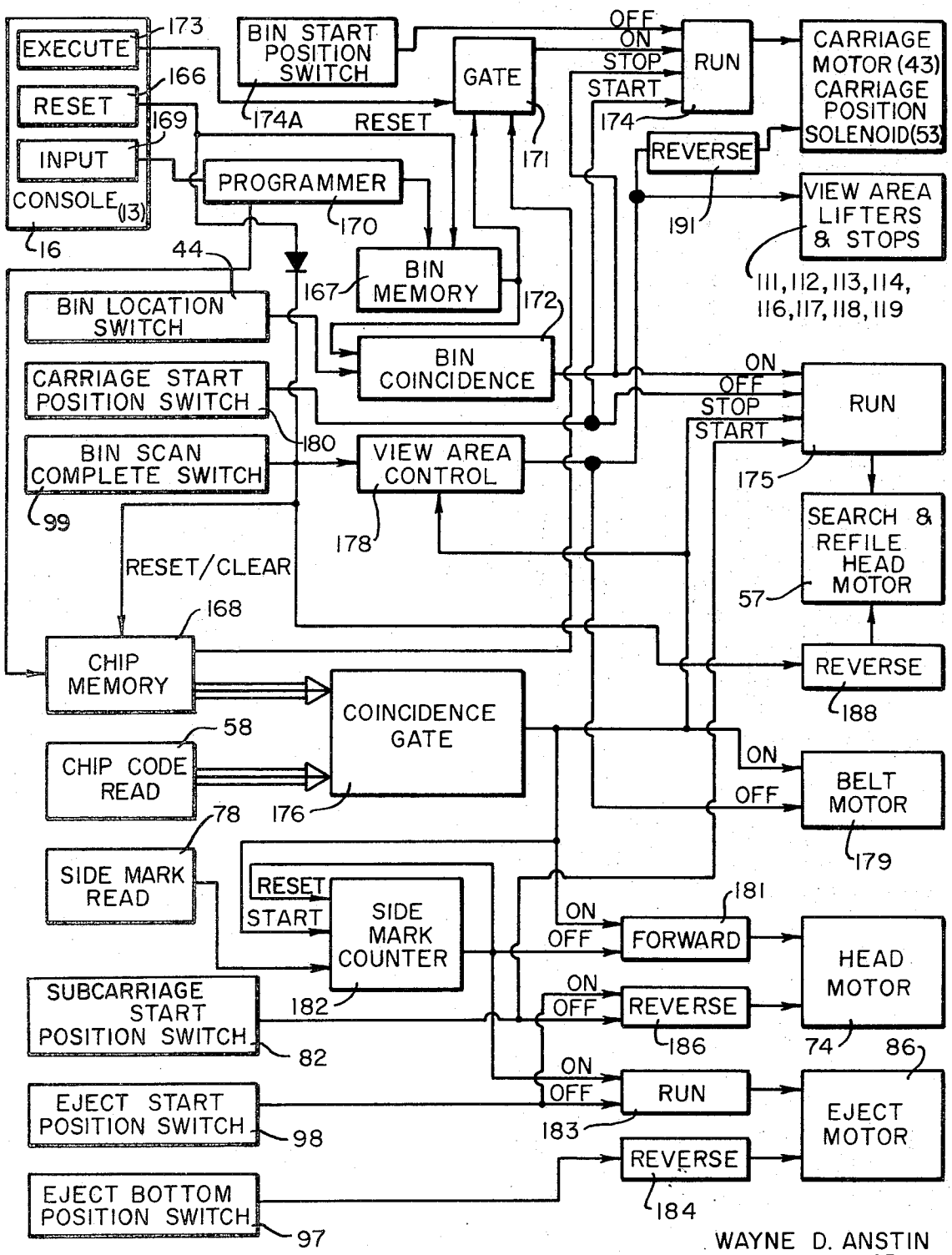

WAYNE D. ANSTIN
INVENTOR.

FIG. 17

BY Flehr, Hohbach, Test, Albritton and Herbert
ATTORNEYS

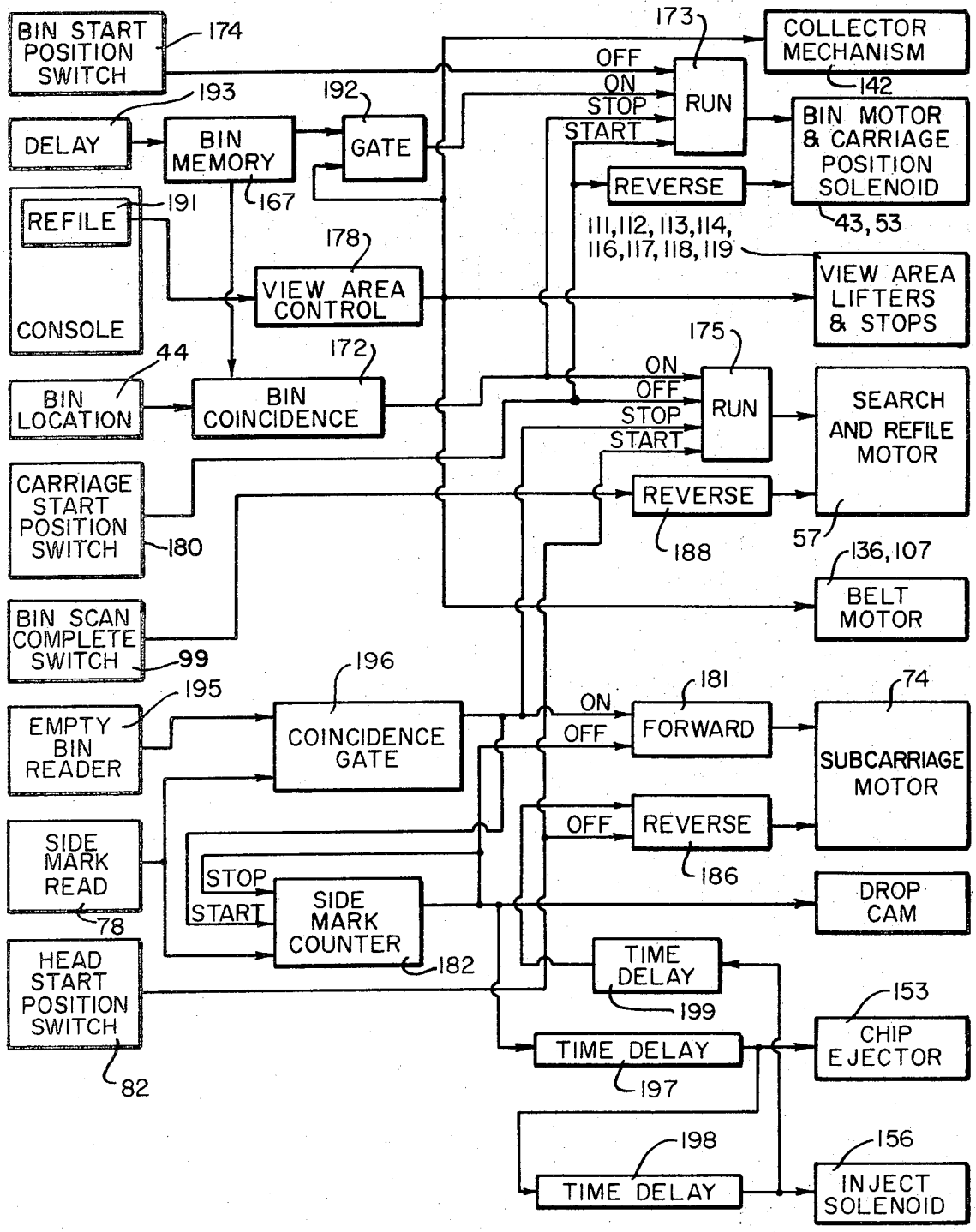

WAYNE D. ANSTIN
INVENTOR.

FIG. 18

BY Flehr, Hohbach, Test, Albritton and Herbert
ATTORNEYS

STORAGE AND RETRIEVAL SYSTEM

BACKGROUND OF THE INVENTION

This invention relates generally to a document and information storage and retrieval system and more particularly to an automated system for filing, storing, retrieving, displaying, copying, refiling and updating documents and information carried on carriers as, for example, in the form of microfilm.

Document and information storage systems using coded cards or carriers are known in the art. The cards or carriers are coded, stored and retrieved in a variety of ways. In general, a face coding is employed whereby the face or a portion of the face of each card or carrier must be scanned in order to select the desired carrier. To conserve storage space, the cards or carriers are packed in such a manner that they are touching one another. This requires that they must either be separated in order to scan the coded face and separated to allow the selected carriers to be removed. Other systems utilize roll microfilm and strip microfilm which is fed past a reader or copier. Still other storage systems utilize video tape.

The major difficulty with prior art systems is the lack of ability to, upon command, automatically, rapidly and accurately find, retrieve and display or copy any desired stored documents and to update and store documents in the system no matter how large the size of the file.

OBJECTS AND SUMMARY OF THE INVENTION

It is an object of the present invention to provide an improved document and information storage and retrieval system.

It is another object of the invention to provide a document storage and retrieval system which, upon command, automatically, rapidly and accurately finds documents stored in bins, retrieves the documents, displays or copies the documents and then stores the documents in their respective bin.

It is another object of the invention to provide a document storage and retrieval system in which the documents can be easily up-dated.

It is another object of the present invention to provide an improved search and refile head for a document storage and retrieval system.

It is still another object of the present invention to provide an improved document carrier.

The foregoing and other objects of the invention are achieved by a system which includes a plurality of elongated storage bins disposed side-by-side and each including means for receiving and holding a plurality of coded document carriers in spaced face-to-face parallel relationship. A carriage is adapted to move to and then along a selected bin. The carriage includes a storage and retrieval head which includes means for reading the code on the carriers, transmitting a signal to the electrical control circuit which serves to stop the carriage when a selected carrier is found. The search and refile head then moves within the carriage to register with and then release the selected carrier. A transport means accepts the retrieved carrier and transports it to a display station where the document carried by the carrier is read, copied or displayed. Upon completion of the reading, display and/or copy operation, the carrier is returned to the storage and retrieval head where it is transported along the bin and re-inserted into the first open filing space.

BRIEF DESCRIPTION OF THE DRAWINGS

FIG. 1 is a perspective view showing a storage and retrieval system in accordance with the invention including a storage unit, operator's console and copy and display apparatus.

FIG. 2 is a plan view of a storage unit showing the storage bins, carriage, reading station, and camera and carrier transport belts.

FIG. 3 is a front elevational view taken generally along the line 3—3 of FIG. 2.

FIG. 4 is a sectional view taken generally along the line 4—4 of FIG. 2.

FIG. 5 is a partial rear elevational view taken generally along the line 5—5 of FIG. 2.

FIG. 6 is a side elevational view taken along the line 6—6 of FIG. 2.

FIG. 7 is a sectional view of the carriage taken generally along the line 7—7 of FIG. 2.

FIG. 8 is an enlarged perspective broken view of a storage bin.

FIG. 8A is an enlarged view of the portion 8A—8A of FIG. 8.

FIG. 9 is a sectional view taken along the line 9—9 of FIG. 2.

FIG. 10 is a plan view of the carriage and storage and retrieval head.

FIG. 11 is an enlarged plan view of the storage and retrieval head shown in outline in FIG. 10.

FIG. 12 is a view, partly in section, of the carrier retrieval or eject mechanism.

FIG. 13 is a side elevational view showing the carrier retrieval and refile mechanism.

FIG. 14 is a sectional view taken generally along the line 14—14 of FIG. 2 showing storage bins arranged side-by-side.

FIGS. 15A – 15E and FIGS. 16A – 16E show the progressive positions of the refile mechanism during a refile operation.

FIG. 17 is a schematic block diagram of the search and read controls.

FIG. 18 is a schematic block diagram of the refile controls.

DESCRIPTION OF THE PREFERRED EMBODIMENT

The system of the present invention includes a multilevel storage cabinet 11 having a plurality of storage levels 12, each of which contains a storage unit of the type shown in FIG. 2. Each level 12 includes a plurality of side-by-side elongated bins which hold edge-notched film carriers. Each level includes scanning, retrieval, transportation, display and refiling system for selectively filing and retrieving carriers carrying documentary or other information.

An electrical control console 13 is associated with the storage cabinet and levels for indexing appropriate cabinet level and bins within each storage level. The electrical control apparatus includes a memory for remembering the bin location of each carrier. In addition, there is provided an apparatus 14 which serves to provide hard copy, transmit video information or otherwise display the document or information on the selected carrier.

In operation, when a particular document of information is desired, its normal decimal, numerical or alpha-numerical code is entered in the keyboard 16 of the operator's console. As the code is entered, it is converted to machine-readable code utilized by the system for selecting the appropriate storage cabinet, level and bin within the level where the carrier containing the information is stored. Thereafter, the carriage moves over and searches through the selected bin to retrieve or eject the desired carrier and present it for reading. It can be viewed at 17 or printed in hard copy at 14.

Each storage level, FIGS. 2 through 11, is self-contained. The level includes a suitable support frame 21 including cross members 22 (FIGS. 2, 14) which receive and support the sub-assemblies and elongated storage bins 23 which are arranged in side-by-side relationship. The storage bins serve to receive and retain carriers 24, FIGS. 8 and 8A. The carriers include a rectangular frame 26 having a window or opening 27. The frame serves to hold microfilm 28 or other document or information storage member. The rectangular carrier includes edge-notching or coding 29. The edge coding may comprise a binary, decimal binary, octal or other suitable machine-readable code which will allow the system to search for, to locate and select carriers containing the desired document or information.

The carriers 24 are inserted into opposed cooperating grooves 31 formed in the side walls of the storage bins. In general, the storage bins are in the form of a tray with open top and bottom. The rectangular carriers are held vertically in the bins in the spaced grooves 31. The edge-notched code in each of the carriers is presented at the top of the bin where it can be easily read. If required, it is possible also to apply a code to the other edge of the carrier where it is exposed at the bottom of the bin. The carriers are suitably retained in the storage bins. For example, a resilient member 32 can be placed along the bottom edge of one side of the bin to close the end of the grooves whereby to prevent the carrier from slipping through the bin under its own weight but which yields to allow the carrier to pass when the carrier is being ejected or retrieved.

One of the sides of the storage bin includes marks 33 which are employed in connection with the search and refile head for accurately positioning the head over the correct carrier during a retrieval or refile operation, whereby the correct carrier is retrieved or refiled.

A carriage 34 is mounted for movement in the X direction to cooperate with a selected bin 23. The search and refile head 36 moves over the selected bin in the Y-direction to select a particular carrier or carriers as will be presently described.

The carriage 34 includes spaced support bearings 37 which ride on spaced shafts 38 (supported on the frame 21) to allow the carriage to move in the X-direction. The search and refile head 36 is carried on bearings 39 which support the head on spaced shafts 41 supported by the movable carriage for movement in the Y-direction. The carrier is moved by a belt, chain or cable 42 driven by a motor 43 mounted on the frame 21. The carriage is secured to the belt 42 so that it moves with the belt along the shafts 38 when the belt is driven by the motor 43.

A plurality of switches 44 (FIGS. 2 and 5) are disposed on the frame 21 next to the carriage 34. The switches are actuated by a cam (not shown) mounted on the carriage. There is one switch 44 associated with each bin and is adapted, when actuated, to send a signal to the electrical controls. When the carriage is over the desired bin, it actuates the corresponding switch and the control turns off power to the motor 43 to stop the carriage.

Means are provided for accurately positioning the carriage with respect to the selected bin. The positioning mechanism is shown more clearly in FIGS. 2 and 7. It comprises a pin 46 which is urged downwardly by spring 47. The pin is held in its retracted position by means of a cable 48 cooperating with the lever arm 49 pivoted at the end 51 and engaged at its other end by the solenoid armature 52. When the solenoid 53 is energized, the pin is retracted and the carriage can move in the X-direction. When the carriage is stopped, the pin fits into a tapered hole 54 on plate 55 carried by the frame and thereby moves and positions the carriage.

The search and refile head 36 is moved along spaced shafts 41 by means of a drive belt 56 driven from a motor 57 (FIGS. 2, 5). The motor is energized after the pin 46 has been seated to locate the carriage in the X-direction. The search and refile head is suitably attached to the belt and is moved in the Y-direction as the belt rotates.

The search and refile head is shown in more detail in FIGS. 10, 11, 12 and 13. The mechanism includes a code or card-reading assembly 58 mounted on the front end of the search and refile head. The sensing assembly 58 comprises a plurality of parallel light sources 59 disposed to project light 61 at an angle towards the top edge of the carriers. A phototransducer 62 is positioned to receive light reflected from the top edge of the carriers. The light source 59 and phototransducer 62 are arranged in such a manner so as to lie exactly opposite to each other and are equal in number to the selected code. Preferably, the light sources 59 project a collimated light beam which is adapted to shine directly on the top edge of the film carriers 24. The light is reflected off of the top edge of the film carriers and is sensed by the phototransducers. One or more of the collimated light beams will pass through the notched portion and not be sensed. Thus, an identifying binary code can be provided by appropriately notching the edges. When the code reference number of the desired document is entered by the system operator into the control, this number is translated to the corresponding carrier code and applied to a comparator, whereby when the selected carrier code is generated by the phototransducer, a command signal is generated which stops the Y-drive motor 57. Simultaneously, a dynamic braking assembly 63 mounted on the side of the carriage engages the shaft 41 and locks the carriage against further movement. Thus, the carriage is positioned along the bin.

The carriage includes means for advancing the search and refile head within the carriage to accurately position the head over the selected carrier to retrieve or eject the carrier from the storage bin. Thus, the search and refile head 36 includes a sub-carriage 71 carried by spaced bearings 72 mounted on shafts 73 (FIG. 10) mounted on the carriage 34. A drive motor 74 is mounted on the carriage 34 and drives lead screw

76. The lead screw is provided with a nut 77 connected to one of the bearings 72 to move the head 36 in the Y-direction in response to energization of the motor 74. Thus, after the carriage 34 is locked in place on the rods 41, the sub-carriage 71 moves responsive to rotation of the lead screw 76.

When the sensing assembly 58 senses the desired carrier, the carriage is locked in place along the bin. Simultaneously, the motor 74 is energized to bring into alignment the carrier ejector blade 70 (FIG. 12). As previously described, each of the bins carries reference marks 33 along one top edge. A sensor 78 comprising a light source 79 and phototransducer 81 is mounted on the side of the head to scan the reference marks and generate signals each time a mark is scanned. There is a fixed physical distance between the centerline of the blade and reference mark sensor. Thus, when the desired carrier is sensed and the carriage stops, the storage bin slot reference mark sensor is turned on along with the motor 74 thereby moving the search and refile head forward. The storage bin slots are a fixed distance apart from the centerline of one slot to the centerline of the next; the reference marks are a corresponding precise distance apart equal to the centerline spacing of the bin slots. The distance between the ejector blade and the carrier sensor is fixed. Thus, after a carrier is sensed by the scanner 58, the search and refile head is moved ahead a given number of reference marks. For the sake of example, assume that the distance equals eight reference marks. The, the refile head carriage moves forward until eight reference marks after the desired carrier is sensed and the carriage stopped, at which time the motor 74 is turned off. The ejector blade 70 is located accurately over the selected carrier.

After the carrier is ejected as will be presently described, the motor 74 is reversed to return the head to its original position. Its normal or return position is determined by engagement of the microswitch 82 which turns off the motor 74 and resets the control circuit.

The ejector blade 70 is driven by a pair of parallel screws 83 which threadably receive members 84 attached to the blade 70. The screws are rotated by means of a motor 86 which drives shaft 87 and lead screw 83. Gear means 88 drive shaft 89 which engages gear 91 to drive the other lead screw 83. The lead screws 83 also act as guides for the ejector blade to ensure that it is properly aligned as it enters the bin to eject the carrier from its associated grooves.

Spaced brackets 92 are attached to control shaft 93. When the ejector blade has reached its forward position and has ejected the film carrier from the associated bin slot, the member 84 engages bracket 92 to move shaft 93 which rotates the lever arm 94 pivoted at 96 to actuate switches 97 and 98. Switch 97 is connected in circuit to reverse the ejector blade motor 86 and retract the blade. In its fully retracted position, the bracket 92 is engaged by member 84 to actuate switch 98 and turn off the motor 86.

The electrical signal generated by the closing of the switch 98 energizes the search and refile stepper motor 74 to retract the search and refile head 36. When the limit switch 82 is actuated, it generates a signal which stops the search and refile head. In addition, the signal turns on the code sensor 58 and starts the Y drive motor 57 which drives the search and refile carriage further down the storage bin. As it is driven, the code reader 58 continues to search for selected film carriers. If it finds a selected carrier, it will eject it in the manner described; if not, when it reaches the end of the storage bin, it will actuate a limit switch 99 which will stop and reverse the motor 57 and signal completion of the search of that particular bin. The search drive motor and refile head assembly is returned to its start position where it actuates a switch which is located at the retracted position of the assembly (not shown in the drawings) to stop the motor 57. Actuation of the switch turns off the Y-direction drive motor 57; it releases the fine alignment positioning pin 46 and again energizes the X-direction drive motor 43 to return the carriage to its starting position when it is ready to receive the next command signal to re-position the carriage for searching another or the same bin.

Means are provided for moving the carriers 24 which are ejected from the bins to an area 101 (FIG. 2) where the document or information contained on the carriers 24 can be viewed or read. In the embodiment of the invention shown, the transport means comprises a conveyor belt system.

A conveyor belt 102 is located below each of the bins and moves in the direction indicated by the arrows 103. The conveyor belt is supported on spaced rollers suitably mounted to the frame 21. The plurality of conveyor belts 102 may be driven by a single motor (not shown). Alternately, there may be provided a single conveyor belt 102 which travels in the X-direction with the carriage so that it underlies the selected bin. Thus, when a carrier is ejected, it falls downwardly onto the fast moving belt 102 and is delivered to the far end of the machine. The carrier then falls onto a belt 104 which moves the carrier toward the reading area 101. The carrier is then moved onto belt 105 which brings the carrier upwardly and deposits the same onto conveying means 106 which may, for example, comprise spaced O-ring belts 107 which are adapted to receive the carrier frame and move the carrier to the display or read position.

The spaced O-ring belt 107 allow light from a light source 108 (FIG. 9) to travel upwardly through the document in the carrier to illuminate the document for viewing by the television camera. As the retrieved carrier 24 moves up along the belt 105, it activates a sensing means (not shown). The signal generated by the sensing means actuates a solenoid (not shown) that is attached to the arm 109 at each of the viewing stations. The downward action of the corresponding arm moves the film carrier lifters 111, 112, 113, 114 (FIG. 4) down below the level of the O-ring belt 107 and moves the view area stops 116, 117, 118, 119 away from the belt 107 leaving the first stop 116 in position. Movement of the stops 117, 118, 119 allows passage of the first film carriers into the first view area 121. A sensor (not shown) is located at each view area. Thus, when the carrier is in the view area 121, the sensor is activated and it releases the solenoid associated with the next stop 117 which brings the stop into position and simultaneously lifts the lifter 114. This procedure is repeated until carriers are positioned in the view areas 122, 123, 124. Thus, by selectively operating the stops

responsive to passage and positioning of film carriers, four or more film carriers may be positioned for viewing and lifted above the belt **107**.

The viewing or reading means may comprise a video camera which is mounted for movement to selectively view each of the areas and generate an electrical signal which is transmitted to the display station **13** and copying station **14**. The reading means may also include film copier, hard copier, optical viewer, flying spot scanner or the like.

The camera **126** is mounted on a carriage **127** which rides on spaced shafts **128**. The carriage is driven by the lead screw **129** to position the camera opposite a selected viewing area. The screw is driven by motor **131** via belt **132**. Rather than bringing the carriers upright, the camera views the carriers through a mirror **133** (FIG. **4**). The signal is then derived by the video camera and transmitted along the line **134**.

After the information on the carriers has been read, means are provided for actuating the stop and lift solenoids to release the carriers. The carriers then drop onto O-ring belt **107** and are moved and delivered to the belt **136** which brings the carriers upwardly and delivers them to the feed belt **137** associated with the search and refile head **36**.

As the first film carrier **24** moves onto the belt **137**, a sensing assembly **138** which may comprise a light source and phototransducers senses the film carrier and generates a signal which is transmitted to the control circuit. The solenoid **139** is energized and it rotates a pair of arms **141** mounted on the sides of the receiving station **142** into place, FIGS. **15A**, **16A**. Normally, the arms **141** are in the position flush against the side wall of the receiving station. When the arms are rotated into position, they receive the film carriers **24** as they are moved into the receiving station **142** by the belt **137** through the opening in the back wall of the station. When all of the film carriers **24** are in the station **142**, the solenoid **139** is deenergized and the arms **141** are rotated flush with the side walls of the receiving station **142**. This allows the stacked carriers **24** to drop down into the station where the carriers are received and held by spaced arms **146** which extend inwardly into the station, FIGS. **15B**, **16B**. The arms **146** are mounted on shafts **147** which are connected at their upper ends to cranks **148**. The cranks are interconnected by linkage **149** and rotated by solenoid **151**. Each of the shafts carries second arms **152** disposed at 90° with respect to the arms **146** and below the same a distance corresponding to the thickness of a carrier. Thus, rotation of the shafts **147** by cranks **148** moves the arms **146** away from the lower carrier and the arms **152** into place to receive the carrier above the first carrier stacked in the receiving station. When the arms are rotated to the retracted position, the bottom carrier is released by the arms **146** and the stack is held by the arms **152**. Thus, means are provided for individually releasing the carriers from the stack.

When all of the film carriers are in the station **142**, a signal is generated and transmitted to the control circuit. The control circuit turns on the motor **43** to move the carriage into position with the bin from which the carriers were originally retrieved. When it locates the storage bin, it stops and is located in the manner previously described. The search and refile head **36** moves along the bins. A storage bin slot sensor (not shown) including a light source and phototransducer move with the carriage as it moves along the bins and generates a sensor signal when an open bin slot is located which stops the carriage so that the search and refile head assembly is directly over the open storage bin slot.

At the same time, the solenoid **151** which rotates the upper cranks **48** is energized to rotate shafts **147** and release the next carrier, FIGS. **15C**, **16C**.

As the arms **146**, **152** are returned to their normal position and the lower carrier is released and falls onto an erector plate **153**, FIGS. **15C**, **16C**, at the same time rotary erector solenoid **154** is energized and it rotates the arm **152**. The solenoid **154** rotates the erector plate to a vertical position, FIGS. **15D**, **16D**. After the erector plate has been fully erected, solenoid **156** is energized and serves to rotate the arms **157** which drive the injector blade **153** to engage the top of the carrier and urge the same downwardly into the open slot in the storage bin, FIGS. **15E**, **16E**. The injector is then retracted.

At this point the storage bin slot sensor senses a filled slot and generates a signal which is transmitted to the control circuit. This signal releases the dynamic brake and the motor **57** moves the carriage along the bin looking for the next available open bin slot in which to store the next film carrier. When an open bin slot is found, the head assembly stops and the next carrier is placed into the storage bin.

When all the film carriers have been refiled, the motor **57** is reversed and the carriage is returned to its starting position.

As described above, the various mechanical operations are initiated and controlled by sensors and switches on the apparatus and associated memory and control circuits. FIG. **17** is a schematic block diagram of the search and read control, and FIG. **18** shows the refile control.

Control console **13** and keyboard **16** are shown on the left side of FIG. **17**. A request for one or more documents, consisting of one or more carriers, is initiated by actuating the reset button **166** which generates a signal to reset the logic in the bin memory **167** and chip memory **168**. The bin memory includes a suitable electronic memory which can be in the form of a logic circuit or core memory which remembers the particular storage bin in which each of the various carriers is located. The bin memory also includes logic circuits and registers for remembering the carriers which are being requested.

The operator enters carrier requests by operation of input switches **169**. The requests are applied to a programmer **170** which serves to store the information regarding the requests and to release one request at a time to the bin memory **167** and to the chip memory **168**. The bin memory **167** provides a ready signal to the gate **171** when it has found the bin address and the address to the bin coincidence gate **172**. After all requests have been entered, the execute button **173** is depressed and provides a signal to the gate **171**. When the gate **171** receives signals from the bin memory **167**, the chip memory **168** and the execute signal, it provides an on signal to the run logic circuit **174**. This starts the carriage motor **43** to move the carriage in the X-direction along the bins. As soon as the carriage moves, it turns

on the bin start position switch whereby the circuit **174** continues to apply power to the carriage motor **43** so that it continues to move along the bins and sequentially actuates the bin location switches **44** each having a characteristic signal. When the signal generated as a result of depression of a switch **44** coincides with the signal from the bin memory **167**, a stop signal is applied to the run logic circuit **174** to turn off the motor **43** and stop the carriage and to deenergize the position solenoid **53** to accurately locate the carriage with respect to the selected bin. The coincidence signal is also applied from bin coincidence to the logic circuit **175** which starts the search and refile head motor **57** to move the search and refile head assembly **36** along the length of the bins. The chip memory **168** applies a signal to coincidence gate **176** which identifies the first requested carrier. As the search and refile head moves along the bin, the code reader **58** applies signals corresponding to the code on each of the carriers which it reads as the head moves along the bin to the coincidence gate **176**. When the chip code read by the reader **58** corresponds to the chip memory signal, the coincidence gate **176** generates an output signal which is applied to the logic **175** to stop the search and refile head motor **57**, to the view area control circuit **178** which controls the view area lifters and stops, to the belt motor **179** to start the belt and to the motor control **181** which turns on the head motor **74**. The signal from the coincidence gate **176** also enables the mark counter **182** which receives the signals from the mark reader **78**. When a predetermined count is reached, it generates an off signal which is applied to motor control **181** to stop the head motor **74**. This accurately locates the ejector blade **70**, as previously described, and resets the side mark counter **182**. The output of the counter **182** is also applied to control circuit **183** which starts the eject motor **86** to move the ejector blade downwardly and eject the selected carrier. As soon as the blade reaches its extreme position, it activates the switch **97** which applies a signal to the reverse control **184** to reverse the eject motor which then travels back until the switch **98** is activated, at which time the motor **86** is turned off. This signal is also applied to the motor control **186** which reverses the direction of the head motor **74** and returns the head back to its starting position, at which point it actuates switch **82** which turns off the head motor **74**.

Actuation of the switch **82** also serves to apply a signal to the control circuit **175** which starts the search and refile head motor **57**. The sequence of operations just described is repeated until all the carriers in the particular bin have been ejected.

When the search and refile head reaches the end of its travel, it strikes the bin scan complete switch **187** which serves to reset the chip memory, apply a signal to the search and refile head reverse control circuit **188** to reverse the head motor and retract the head along the bin to its starting position where the carriage start switch **180** is actuated to enable the carriage to move to the next bin.

Additionally, the signal enables the view control **178** which serves to control the solenoids associated with the lifters **111, 112, 113, 114** and the stops **116, 117, 118** and **119** to thereby appropriately position the carriers above the O-ring belt **107** for viewing. The carriage is brought back to its original start position by the reverse circuit **191** and the conveyor belt motors are turned off. The view area control **178** receives the signal and controls the video camera for sequential positioning to read the carriers at each of the positions **121, 122, 123** and **124**. Controls (not shown) are also included in the console whereby the operator can selectively position the camera to read any one of the desired carriers.

When the operator has completed retrieving the desired information, the operator commands a refile sequence. The refile sequence is commenced by depressing the refile button **191** which sends a control signal to the view area control **178**, FIG. **18**. The view area control starts the motor which drives the O-ring belts **107**, the belt **136** and the collector belt **142**. A signal is also applied to the gate **192**. The view area control **178** serves to sequentially lower the lifters **114, 113, 112, 111** and to sequentially withdraw the stops **116, 117, 118** and **119** to thereby sequentially present the carriers to the O-ring belt **107** where they move onto the belts **136** and **137**. When all of the chips have been collected in the collector mechanism **142**, which occurs a predetermined time after the start of the sequence, a signal is applied by the delay circuit **193** to the bin memory **167**. The bin memory applies a signal to the gate **192** which controls the circuit **173** to start the carriage motor **57**. The bin memory **167** sends a bin address signal to the bin coincidence gate **172** which is adapted to receive signals from the switches **44** and when the switch corresponding to the bin from which the carriers were received is activated, provides an output signal which stops the carriage motor **57** and actuates the position solenoid **53**. Simultaneously, it applies a signal to the control circuit **175** to start the search and refile motor **57**. This moves the head along the bin until the first empty position is located by the empty bin reader **195**. When the empty bin reader **195** finds an empty slot, it generates a signal which is applied to the coincidence gate **196**. The output from gate **196** is applied to the circuit **175** to stop the motor **57** and to turn on the head motor **74**. As the head motor drives the search and refile head forward, the side marks are read by the reader **78** and applied to the side mark counter which, after counting a predetermined number of marks, activates the circuit **181** to stop the head so that the carrier insert mechanism overlies the empty slot. At the same time, the counter is reset. The arms **146, 152** are rotated to drop one of the carriers into the chip erect mechanism **153** and after a short time delay, introduced by the circuit **197**, the chip is erected. After another time delay introduced by the delay **198**, the insert solenoid **156** is turned on to thereby insert the carrier into the open slot. After another predetermined time delay introduced by the time delay **199**, the head motor reverse circuit **186** is triggered to turn on the motor **74** and withdraw the head until the head start position switch **82** is actuated to stop the head motor **74**. Simultaneously, the circuit **175** is controlled to start the carriage so that it continues to move forward along the bin until the next empty slot is located where the sequence of operation just described is continued. When the bin scan complete switch **187** is reached by the carriage, the reverse circuit **188** is activated to return the carriage to the start position.

It is, of course, apparent that sensors can be substituted for the various time delay circuits **197, 198** and **199** whereby these time delay circuits sense the dropping of the carrier, erection of the erect mechanism and insertion of the carrier.

It is appropriate at this time to explain the reason for the side mark reader and counter. It is contemplated that the apparatus will move relatively fast and thus when the chip code reader or empty bin slot reader locates a desired carrier or an empty bin slot, the carriage motor will be turned off; however, due to inertia, it may move some slight amount whereby the ejector or inserter blade would not be accurately located. Thus, the apparatus includes marks on the sides of the bins and a reader which serves to accurately count the marks and to advance the head so that it will be exactly positioned over the desired slot in the bin.

It is to be observed that the present system provides for storage of carriers in selected bins and memories to remember the particular bin location of each of the carriers. However, the location of the carriers within the bins is not in the present embodiment stored in memory. The apparatus relies rather upon scanning each carrier in a bin to locate the selected carriers in the bin.

I claim:

1. A system of the character described for storing and retrieving carriers including at least one storage bin having means for receiving and holding a plurality of carriers in spaced relationship, a carriage adapted to be associated with said bin and including a portion adapted to move along said bin, ejector means on said carriage portion for ejecting selected carriers from said bin, means for selectively stopping said carriage portion along said bin whereby to position said ejector over a selected carrier so that it can be ejected from the bin, a viewing area for viewing said carriers, and means for receiving the ejected carriers and transporting same to the viewing area.

2. A system as in claim **1** including means on said carriage portion for receiving carriers from said viewing area, means for transporting carriers from said viewing area to said receiving means, means for selectively stopping said carriage in cooperative relationship with open bin positions, and means on said receiving means for inserting a carrier into said open bin position.

3. A system of the character described for storing and retrieving carriers including at least one storage bin having means for receiving and holding a plurality of carriers in spaced relationship, said carriers including an identifying code, a carriage adapted to be associated with said bin and including a portion moving along said bin, a head mounted on said carriage portion for movement therewith, said head including sensing means for sensing the identifying code, ejector means for ejecting selected carriers, means responsive to sensing of the identifying code of a selected carrier for stopping said carriage to position said ejector means over the selected carrier to eject the carrier from the bin.

4. A system as in claim **3** wherein said identifying code comprises notches formed along at least one edge of said carriers, and said sensing means comprises a light adapted to project towards said slots and a photocell spaced from said light and adapted to receive light reflected from the edge of said carrier.

5. A system as in claim **3** wherein said head is movable with respect to the carriage portion whereby after said carriage portion has been stopped the head can be accurately positioned along the bin.

6. A system as in claim **3** wherein said bin includes a plurality of locating marks accurately located with respect to said carrier positions, said head includes means for viewing the locating marks on said bins and means are responsive to stoppage of said carriage portion for moving said head along said bin whereby said viewing means views said marks and generates a signal, and means responsive to a predetermined mark count for stopping said head to thereby accurately locate the ejector over the selected carrier.

7. A system as in claim **6** including means responsive to movement of the ejector for returning the ejector to its starting position.

8. A system as in claim **7** including means for returning the head to its starting position following ejection of a selected carrier.

9. A system as in claim **8** including means responsive to return of the head to the starting position for starting movement of the carriage portion along said bin.

10. A system as in claim **9** including means disposed at the end of said bin for sensing the movement of said carriage to the end of said bin, and means responsive to said sensing means for returning the carriage portion to its starting position.

11. A system of the character described for storing and retrieving carriers including a frame, a plurality of elongated storage bins located side-by-side and each having means for receiving and holding a plurality of carriers in spaced relationship mounted on said frame, a carriage adapted to move across said bins, means for stopping and locating said carriage in cooperative relationship with a selected bin, said carriage including a portion adapted to move along said bin, ejector means on said carriage portion for ejecting selected carriers from said bin, means for selectively stopping said carriage portion along said bin whereby to position said ejector over a selected carrier so that it can be ejected from the bin, a viewing area for viewing said carriers, and means for receiving rejected carriers and transporting same to the viewing area.

12. A system as in claim **11** including means on said carriage portion for receiving carriers from said viewing area, means for transporting carriers from said viewing area to said receiving means, means for selectively stopping said carriage in cooperative relationship with open bin positions, and means on said receiving means for inserting a carrier into said open bin position.

13. A system of the character described for storing and retrieving carriers including a plurality of elongated storage bins located side-by-side and each having means for receiving and holding a plurality of carriers in spaced relationship mounted on said frame, said carriers including an identifying code, a carriage mounted on said frame for movement across said bins, means for stopping and locating said carriage in cooperative relationship with a selected bin, said carriage including a portion adapted to move along said bin, a head mounted on said carriage portion for movement therewith, said head including sensing means for sensing the identifying code, ejector means for ejecting selected carriers, means responsive to sensing of the

identifying code of a selected carrier for stopping said carriage to position said ejector means over the selected carrier to eject the carrier from the bin.

14. A system as in claim **13** wherein said identifying code comprises notches formed along at least one edge of said carrier, and said sensing means comprises a light adapted to project light towards said slots and a phototransducer spaced from said light source and adapted to receive light reflected from the edge of said carrier.

15. A system as in claim **13** wherein said head is movable with respect to the carriage portion whereby after said carriage portion has stopped the head can be accurately positioned along said bin.

16. A system as in claim **13** wherein each of said bins includes a plurality of locating marks accurately located with respect to said carrier positions, said head includes means for viewing the location marks on said bins, means responsive to stoppage of said carrier portion for moving said head along said bin whereby the viewing means views said marks and generates a signal for each mark, and means responsive to a predetermined mark count for stopping said head to thereby accurately locate the ejector over the selected carrier.

17. A system as in claim **16** including means responsive to movement of the ejector for returning same to its starting position.

18. A system as in claim **17** including means for returning the head to its starting position following ejection of a selected carrier.

19. A system as in claim **18** including means responsive to return of the head to the starting position for starting movement of the carriage portion along said bin.

20. A system as in claim **19** including means disposed at the end of each of said bins for sensing the movement of said carriage to the end of the selected bin, and means responsive to said sensing means for returning the carriage portion to its starting position.

21. A system as in claim **11** wherein said means for transporting said carriers to said viewing area comprises a conveyor belt disposed to move beneath said selected bin to transport the carriers to one end of said frame, and conveyor belt means for receiving said carrier and transporting same to the viewing area.

22. A system as in claim **21** wherein said conveyor belt means includes means for stopping and lifting said carriers as they are delivered to the viewing area, and means for selectively viewing said carriers.

23. A system as in claim **2** wherein said carrier receiving means is adapted to receive a plurality of carriers in stacked relationship, and to present said carriers sequentially to said means for inserting carriers into the open slots.

* * * * *