May 4, 1965 H. BOHM ETAL 3,182,166

MICROWAVE OVENS

Filed Aug. 31, 1962

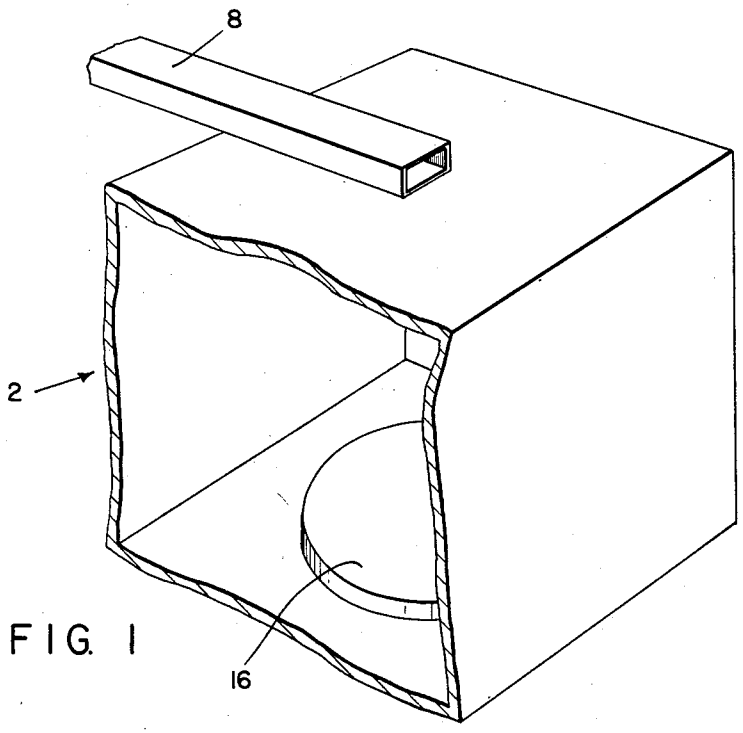

FIG. 1

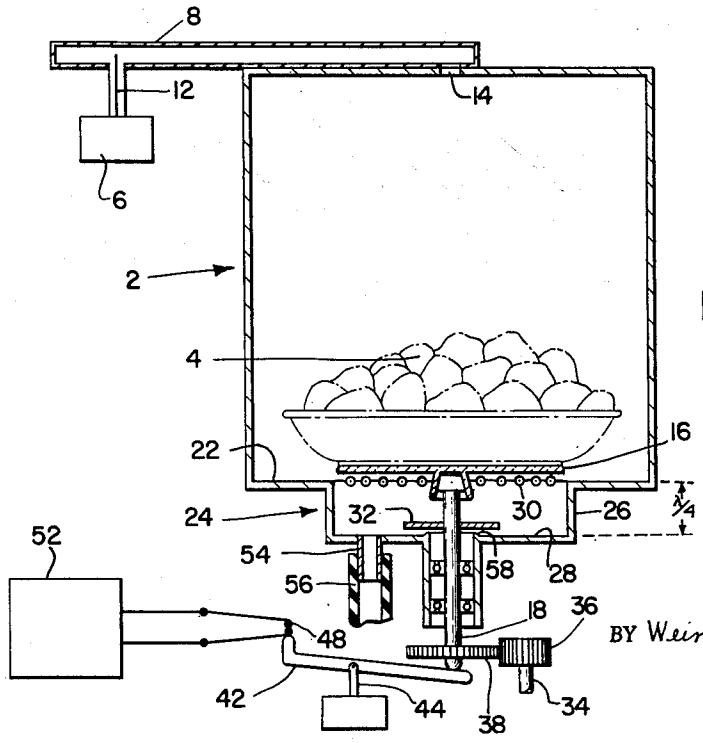

FIG. 2

INVENTORS
HELMUT BOHM
HERBERT DURAS
BY Weingarten, Orenbuch, & Pandiscio
ATTORNEYS

United States Patent Office 3,182,166 Patented May 4, 1965

3,182,166

MICROWAVE OVENS

Helmut Bohm, Rockford, Ill., and Herbert Duras, Oberderdingen, Germany, assignors to Miwag Mikrowellen Aktien Gesellschaft, a corporation of Switzerland

Filed Aug. 31, 1962, Ser. No. 220,807
Claims priority, application Germany, Sept. 4, 1961, D 36,961
4 Claims. (Cl. 219—10.55)

This invention relates in general to microwave ovens and more particularly to apparatus for insuring equalized heating of foods and other substances exposed to microwave energy in the oven.

A major problem of heating an object in a microwave field is the uneven distribution of heat in the object. Unequal distribution of heat can result from a variety of causes. For example, standing wave patterns set up in the oven enclosure sustain minimum and maximum points of field intensity which in turn cause the portions of the object in the more intense field regions to be heated more than the portions in the minimum field intensity regions. Also, the object to be heated, such as a meal containing several different foods, is electrically nonhomogeneous. Further, objects such as fibers in meats and ice crystals in frozen foods are electrically anisotropic. Moreover, the electrical properties of an object may change during heating, for example, during the thawing of frozen materials, and do so to a different degree in different parts of the object.

One of the prior techniques seeking to obtain a uniform heating of objects in ovens employs a rotating turntable which is mounted in a position asymmetrical with respect to the electrical field. The microwave field pattern in the oven enclosure has minimum and maximum field intensities in the plane of the turntable as well as perpendicular to the plane of the turntable. By rotating the turntable, while at the same time moving the turntable up and down, objects mounted on the turntable will move in a series of helicoidal trajectories and all parts of the objects will move through minimum and maximum points of electrical field intensity, thereby evenly heating the objects. Although even heating may be obtained with the aforementioned apparatus, it has been found that the two-dimensional drive entails mechanical complications, is continuously in need of maintenance, consumes a large amount of space, and is apt to be quite noisy.

The primary object of the present invention is to provide a microwave oven which will evenly heat an object.

Another object of the present invention is to provide a microwave oven which accommodates high power inputs and thereby allows rapid heating of objects.

Still a further object of the present invention is to provide a microwave oven which is compact.

Yet another object of the present invention is to provide a microwave oven which has a minimum of mechanical movement and need for maintenance.

The invention resides in a microwave oven, having a source of microwave energy, the oven having a rotatable dielectric turntable mounted over a cylindrical well in the oven enclosure. The bottom surface of the well is an integral number of quarter wavelengths below the floor of the oven. Covering the well at the level of the oven floor are a plurality of fixed metallic grids. As the turntable is rotated, objects thereon are uniformly heated by mode patterns of microwave energy set up in the oven.

Other objects and many of the attendant advantages of the invention will be readily appreciated as the invention becomes better understood by reference to the following

detailed description when considered in connection with the accompanying drawings wherein:

FIG. 1 depicts a microwave oven in accordance with the invention; and

FIG. 2 depicts a detailed arrangement of the turntable used in the oven.

Referring now to FIGS. 1 and 2, there is shown a microwave oven **2** into which objects **4**, such as foods, are placed to be heated. A generator **6**, conventionally a magnetron tube, feeds microwave energy into a waveguide **8** by means of a radiating probe **12**. The waveguide in turn transmits the microwave energy into the oven through a coupling slot **14**.

As shown in FIG. 2, a turntable **16**, upon which the object to be heated is placed, is arranged to rotate on a shaft **18**. The turntable is constructed of a dielectric material and has a downturned edge. Directly in the center of the floor **22** of the oven, as shown in FIG. 2, there is a well **24** which is a quarter wavelength deep. The well is formed by a side wall **26** and a bottom wall **28**. A polarizing grid **30** is mounted on the side wall so that it is flush with the oven's floor and covers the well. The shaft **18** has a metallic disc **32** which is a half wavelength in diameter attached thereto. The disc is in close proximity to the botom wall **28** of the well, thereby forming a choke joint which prevents microwave energy from leaking out the opening in the bottom wall where the shaft passes through.

Power to drive the shaft is supplied by a prime mover (not shown) through a shaft **34** keyed to gear **36**. Gear **36** meshes with a gear **38** which drives the shaft **18**. When an object is placed on the turntable **16**, the object's weight causes shaft **18** to move downwardly, causing a counterlever **42** which is attached to the shaft **18** to pivot. The counterlever is pivoted on a member **44**. Downward movement of the shaft upon one end of the counterlever causes the other end of the counterlever **42** to move upward and close contacts **48** which thereupon completes circuit **52** controlling the power to microwave generator **6**. Thus, unless an object is placed on the turntable, the microwave power to the oven cannot be turned on due to contacts **48** being open. The downward movement of shaft **18** need not be appreciable since its only purpose is to close contacts **48**.

A drain **54**, having a hose **56** attached thereto, allows any water forming on the bottom of the well **24** to be drained off. The bottom wall **28** of the well is slightly raised at **58** to prevent any water from running down the shaft opening.

With the foregoing in mind, operation of the device of FIG. 2 is as follows:

Microwave energy is radiated into the oven through the coupling slot **14** and a pattern of standing waves is set up in the oven. A part of the standing waves are set up between the bottom and top of the oven. In the vicinity of well **24**, microwave energy whose electric field is parallel to the wires of grid **30** will be reflected thereby, while wave energy whose electric field is perpendicular thereto will pass through and be reflected by the bottom wall **28** of the enclosure. Since the well is a quarter wavelength deep, the standing wave pattern of modes reflected by the polarizing grids **30** and the bottom wall **28** will be displaced with respect to each other. Further, because grid **30** is flush with the floor **22**, the standing wave pattern set up by the floor **22** will be continuous with that set up by the grid.

Consistent with the physical dimensions of the enclosure and the well, the oven will be energized by wave energy in several different modes, thereby setting up a plurality of different standing wave patterns. Each of the plurality of modes have minimum and maximum points of field in-

tensity occurring close together so that it is no longer important as in the past to move the object to be heated up and down, but mere rotation of the turntable suffices to equalize heating throughout the object to such a degree that thermal conduction is not needed to be relied upon to any considerable extent to ensure even heating, even when heating is carried out rapidly at high power density.

Therefore, it can be seen that the device allows the use of a small oven enclosure in which high power density can be obtained at relatively low power input levels. While the embodiment shown illustrates the use of a vertical movement of the turntable when an object is placed thereupon to actuate a simple on-off type switch, the lever mechanism shown also effectively acts to counter-balance the weight of the object on the turntable.

As the food in the oven is heated, its weight changes because of the vaporization of its water and other volatile substances. Therefore, the simple on-off switch 48 can be replaced by a control mechanism which responds to changes in weight to control the amount of microwave power supplied to the oven.

Obviously, many modifications and variations of the present invention are possible in the light of the foregoing teachings. It is to be understood, therefore, that the invention is not limited in its application to the details of construction and arrangement of parts specifically described or illustrated, and that within the scope of the appended claims, it may be practiced otherwise than as specifically described or illustrated.

We claim:

1. A microwave oven comprising,

an enclosure for confining microwave energy, having top, bottom, and side walls;

a source of microwave energy;

means for coupling energy from the source to the enclosure;

the bottom wall of the enclosure having a generally cylindrical edge defining an opening therein;

a well having a wave reflective bottom wall and a side wall, the side wall of the well connecting the bottom wall of the enclosure at the opening thereof to the bottom wall of the well;

a polarizing grid disposed over the well, the polarizing grid being mounted flush with the bottom wall of the enclosure; and

a dielectric turntable in the oven, the turntable being disposed above the well.

2. Apparatus in accordance with claim 1 wherein the distance between the bottom wall of the enclosure and the bottom wall of the well is one quarter wavelength.

3. Apparatus in accordance with claim 1, and further including a shaft secured to the turntable, the shaft protruding through the bottom wall of the well and being movable vertically, and means actuated by the vertical movement of the shaft for controlling a circuit permitting power to be applied to the microwave oven.

4. Apparatus in accordance with claim 3 wherein said shaft protrudes through an opening in the bottom wall of the well and further including a metal plate attached to the shaft perpendicular to the axis of the shaft, the metal plate in conjunction with the bottom wall of the well acting as a choke joint to prevent energy from leaking out the opening in the bottom wall of the well.

References Cited by the Examiner

UNITED STATES PATENTS

2,744,990	5/56	Schroeder	219—10.55
2,888,543	5/59	Haagensen	219—10.55
2,993,973	7/61	Johnson et al.	219—10.55

OTHER REFERENCES

German application 1,066,679, printed Oct. 9, 1959.

RICHARD M. WOOD, *Primary Examiner.*