H. B. LEEMING.

VENTILATING SYSTEM.

APPLICATION FILED MAR. 20, 1911.

1,027,740.

Patented May 28, 1912.

2 SHEETS—SHEET 1.

FIG. 1

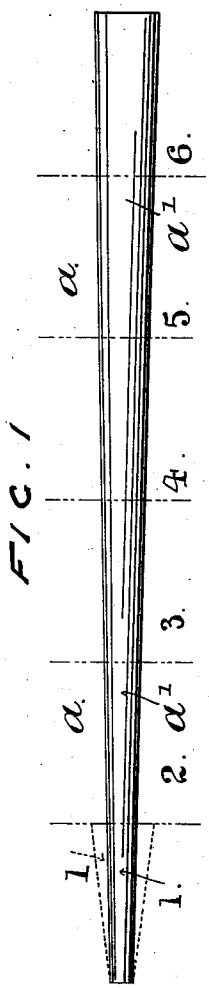

FIG. 2.

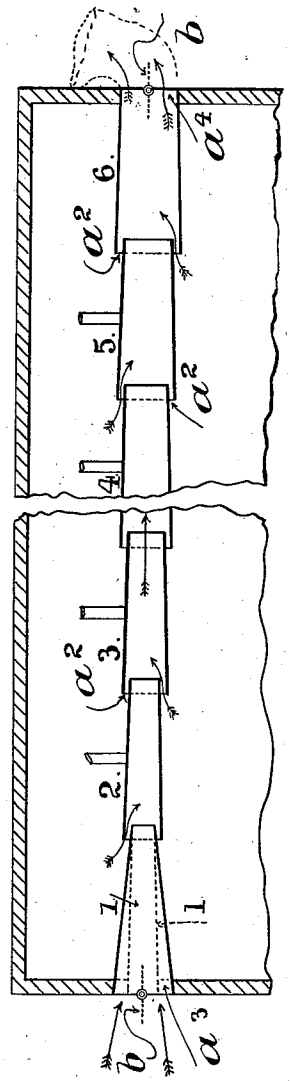

FIG. 5.

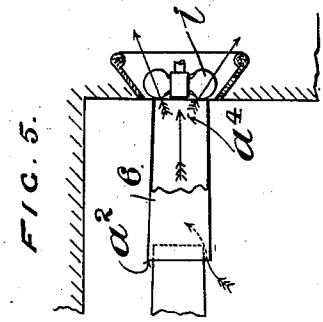

FIG. 4.

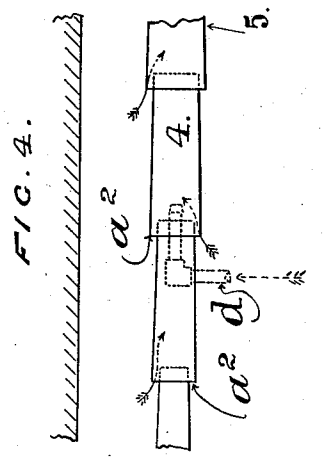

FIG. 3.

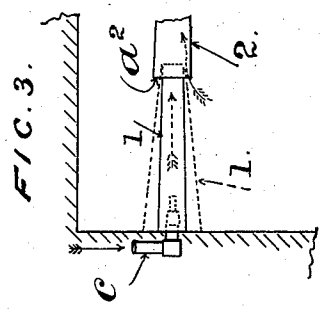

WITNESSES.

John C. Sanders

John G. Percival

INVENTOR.

Harold Benson Leeming

By his Attorney Wm. Wallace Kirk

COLUMBIA PLANOGRAPH CO., WASHINGTON, D. C.

H. B. LEEMING.

VENTILATING SYSTEM.

APPLICATION FILED MAR. 20, 1911.

1,027,740.

Patented May 28, 1912.

2 SHEETS—SHEET 2.

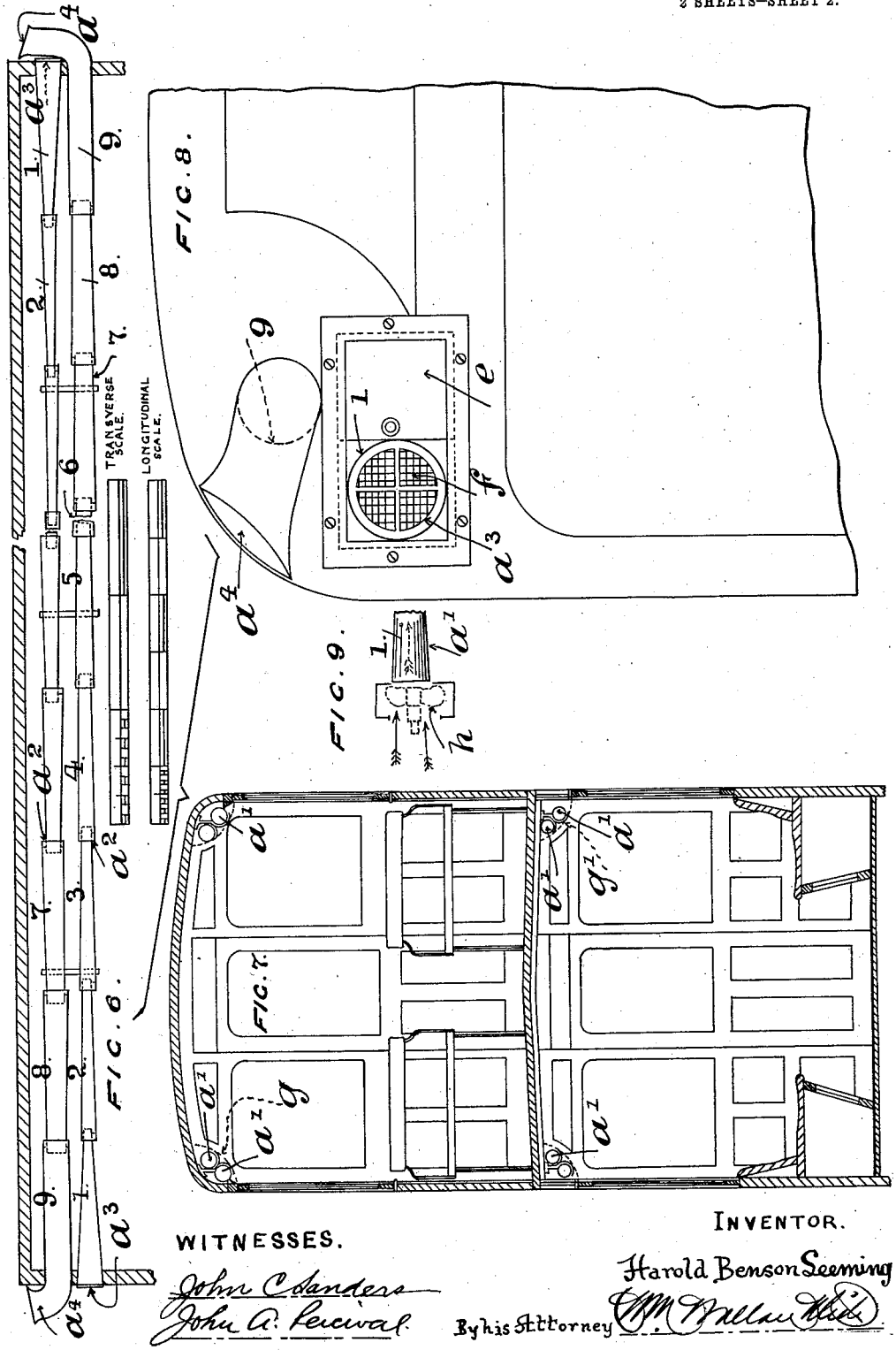

WITNESSES.

John C. Sanders

John A. Percival

INVENTOR.

Harold Benson Leeming

By his Attorney

COLUMBIA PLANOGRAPH CO., WASHINGTON, D. C.

UNITED STATES PATENT OFFICE.

HAROLD BENSON LEEMING, OF SALFORD, ENGLAND.

VENTILATING SYSTEM.

1,027,740. Specification of Letters Patent. Patented May 28, 1912.

Application filed March 20, 1911. Serial No. 615,768.

To all whom it may concern:

Be it known that I, HAROLD BENSON LEEMING, a subject of the King of Great Britain and Ireland, residing at 2 Bloom street, Chapel street, Salford, in the county of Lancaster, England, builder and contractor, have invented new and useful Improvements in Ventilating Systems, of which the following is a specification.

This invention relates to means for ventilating workshops, mills, schools, and other inclosures or structures, but more particularly to means for ventilating vehicles such as electric tram-cars, railway coaches, &c.

According to my invention I use a series of open sheet metal or other cones of varying sizes arranged in line, the small end of one cone projecting into the larger open end of the succeeding cone, and so on throughout the series. The intention is, that a strong current shall be induced down the first cone and delivered at the smaller end into the larger end or mouth of the second cone, and thereby cause vitiated or foul air to enter the larger open mouth of the second, and succeeding cones, and so be swept on through the second cone, on to the third, and so on throughout the series.

I use a considerable number of cones strung together, or suitably supported, and cut from one continuous conical tube in manner to be described, or to corresponding proportions. I string the conical sections so obtained together and so get annular apertures at regular or suitable intervals through which the vitiated air can enter and be swept along by the induced current traversing from end to end.

The use of a series of cones according to my invention, is hereafter described, and reference is to be made to the attached drawings, wherein:—

Figure 1 represents a conical tube and indicates that I cut such tubes into lengths to form the cone units. Fig. 2 is a sectional view, and illustrates how I reverse the several lengths or units and string together for the purpose of getting the best results. The figure is also a diagram showing a complete ventilating device resulting from the use of a string of cones or units arranged on my system. Fig. 3 indicates the use of a nozzle or blowing device. Fig. 4 shows a blowing device introduced about midway in the length of the series of cones, and Fig. 5 indicates the use of a fan at the exit to cause a greater volume of air to traverse the cones in a given time. Fig. 6 illustrates the application of a series of cones, according to my invention, to the ventilation of a tram-car or the like, the figure being a sectional plan. Fig. 7 shows a sectional elevation of a double deck tramcar with the ventilating cones applied. Fig. 8 is an enlarged outside or end view of the double series of cones at one end. Fig. 9 is a diagram showing a fan or blower fitted at the inlet end.

I take a conical tube a, of the desired size, and I cut this into lengths or units a' according to the number required. It might be into 6, or 20, or less or more lengths or units according to the circumstances. These lengths are reversed or turned around, that is, the small end of the first length is introduced into the larger end of the succeeding length, and so on, all as is clear from Fig. 2. This arrangement forms a tube composed of sections of similar tapering form, with the result that the whole device is progressively larger from the outlet to the discharge end. Instead of cutting-up a conical tube into lengths or units it is apparent that the lengths can, when making commercially, be fashioned individually to size.

Where no special blowing contrivance is fitted (or in any case) the first cone or unit 1 has, or may have, a comparatively large open end or mouth to constitute the inlet end and form a blow pipe, and, in such case, the cone or unit 1 would only correspond as to its outlet diameter and possibly its length with the unit 1 shown by the full lines Fig. 2. Such an inlet cone with wide mouth is shown by the full lines in Fig. 2 and the dotted lines Fig. 1.

The smaller end of each cone length or unit projects into the larger end of the succeeding cone to a suitable degree, in such manner as to leave an annular space a^2, and,

it is through such annular apertures, that vitiated air enters. I use for preference such a string of cones, in a series, as extend the length of the apartment to be ventilated, and I suspend the individual cones in suitable manner. The first cone 1 is the inlet into which fresh air passes, or is forced, and the last cone discharges into outside atmosphere through a suitable outlet, cowl, or any other device, if found desirable. Valves of any appropriate kind, and indicated by the reference letter b, may be fitted.

Fresh air, blowing along cone 1, (or induced air forced along said cone), discharges into cone 2, and so on into cone 3, and throughout the series, with result, that foul or vitiated air is drawn through the annular apertures a^2 and is swept along by the traversing current of fresh air and carried out from the discharge end a^4 of the cone 6. The fresh air, sweeping along the channel furnished by the cones, has no tendency to escape at the annular apertures a^2 and consequently no down draft is possible in the vicinity of the inside inlets to the ventilating device.

In Fig. 3 I indicate the use of an air nozzle or blowing device c delivering into the mouth of cone 1, and some such device may prove advantageous when the cones are fixed in a building; or a wider or flared mouth may be fitted. The Fig. 4 indicates a blowing device d fixed mid-way in the length of the series of cones, while Fig. 5 suggests the use of a fan or air extractor i fixed at or about the outlet.

As an alternative, the fan may be incased in a housing combined with one of the cones; or the fan may be fitted at the front, that is, before the entrance to the first cone, (see Fig. 9), and such a combination may serve well for ventilating schools, theaters, mills, churches, &c., a suitably carried or inclosed fan blowing air into cone 1 or into a device leading to said cone.

A system of cones, strung together according to my invention, I find is very suitable for ventilating tramcars, and railway vehicles of the corridor type.

On Sheet 2 I show the application to an electric tramcar. Here the series consists of nine cones or units 1 to 9, and the same are designed or shaped on the principle before set forth and strung together with the small end projecting into the large end of the next length or unit in the series. It is apparent that here again the open or inlet end of cone or unit 1 is relatively larger so that said cone or unit 1 can act as a blow pipe. The leading conical length 1 has its larger end a^3 open to the atmosphere and delivers by its smaller end into the succeeding length 2, and so on, whereby, when the car is moving, a strong current is induced and caused to traverse the series 1 to 9. The fresh air traversing through the cones 1 to 9, extracts the foul air through the annular apertures a^2 and carries the same backward and discharges through the outlet a^4 from cone 9. This outlet may be turned side-wise, as at Fig. 8, or be turned down, or it may deliver into a chamber or channel. The series of cones are supported by small brackets, or hangers, and are for preference incased behind a suitable grid or screen g to prevent tampering.

It will be observed, that, on each side of the car, I show a double series of cones fitted, and, it will be understood, that they are arranged reverse ways and one series are in use when the car travels in one direction, and the other when the car travels in the opposite direction.

I may fit a sliding or other valve, such as e, to close the air inlet to one series of cones when the same are out of use. Also, I may fit a screen f over the air inlet a^3 to cone 1.

As is obvious, I may utilize an electric fan, or an air blower, in connection with the first or any of the cones in the series, as electric power is available on a car. This is indicated at Fig. 9 where the fan is marked h.

If found desirable I could fit a valve in connection with the delivery cone or outlet, or one of the cones, to check or close against down draft; or I may fit manually operated valves in connection with the outlet cones. I have already indicated the use of valves by the showing at e.

I illustrate two sets of a series of cones longitudinally disposed on each side of a tramcar, but obviously I may use any required number of sets, and I may locate the sets in provided air trunks located in the car roof.

I have experimented with a series of cones of which the outlet has a diameter equal to 4 times the diameter of the smaller end of the first or blowing cone No. 1. This proportion is however only given by way of example and may be greatly varied.

I declare that what I claim is—

1. A ventilating device consisting of a tube composed of sections of similar tapering form, but progressively larger from the inlet to the discharge end, said sections being arranged with the larger end toward the intake and the smaller toward the discharge, said smaller end of each section entering axially into the larger end of the next section in advance, all substantially as described.

2. A ventilating device located in an inclosed chamber and having an inlet and discharge opening to the atmosphere, said device consisting of a tube composed of sections of similar tapering form, but progres-

sively larger from the inlet to the discharge end, said sections being arranged with the larger end toward the intake and the smaller toward the discharge, said smaller end of each section entering axially into the larger end of the next section in advance, substantially as described.

In testimony whereof I have signed my name to this specification in the presence of two subscribing witnesses.

HAROLD BENSON LEEMING.

Witnesses:

RICHARD WEBSTER IBBERSON,

ALFRED STUART YATES.

Copies of this patent may be obtained for five cents each, by addressing the "Commissioner of Patents, Washington, D. C."