(No Model.) 2 Sheets—Sheet 1.

Z. T. FRENCH & W. C. MEYER.

WELT SEAM TRIMMING MACHINE.

No. 590,831. Patented Sept. 28, 1897.

Fig. 1.

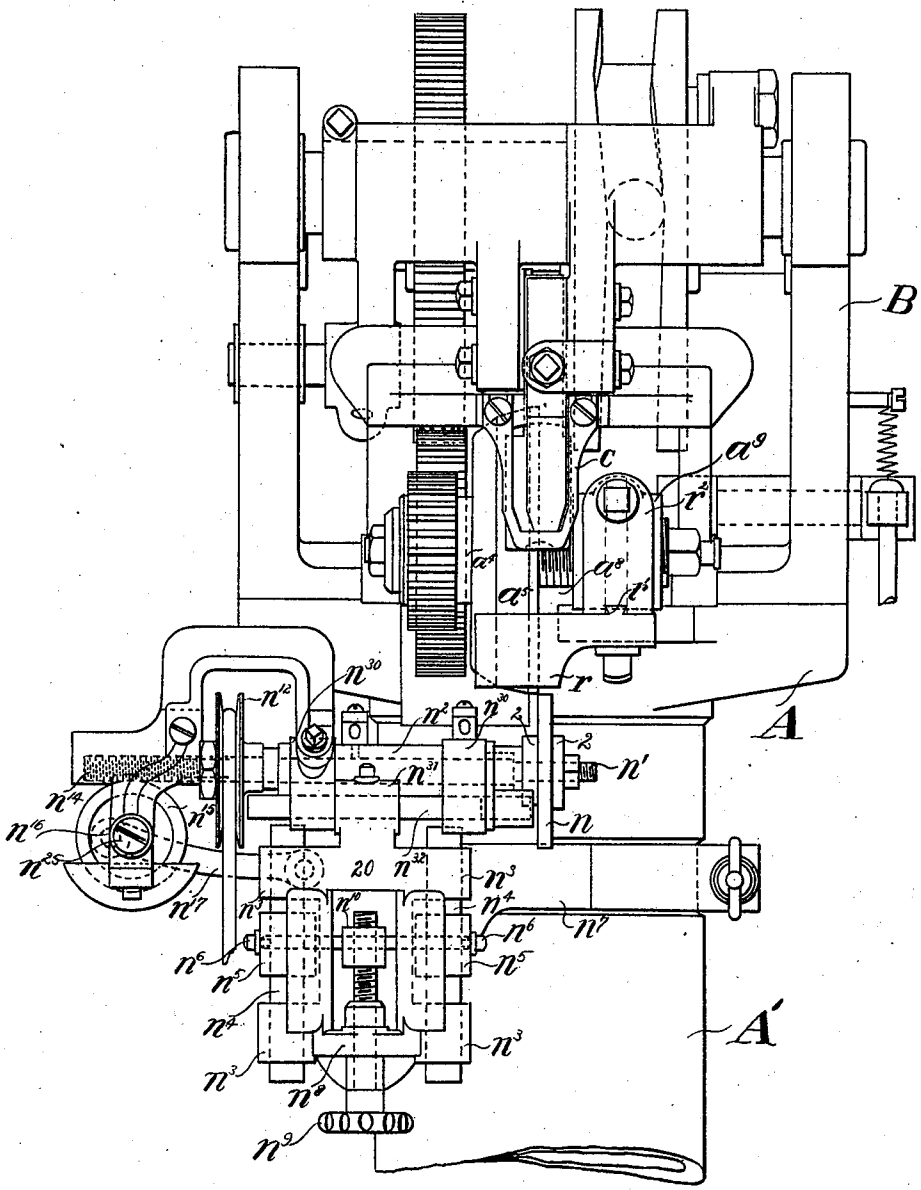

Witnesses

Harry O. Robinson.

F. H. Davis

Inventors

Zachary T. French

William C. Meyer

by R. J. Hayes atty.

THE NORRIS PETERS CO., PHOTO-LITHO., WASHINGTON, D. C.

(No Model.) 2 Sheets—Sheet 2.

Z. T. FRENCH & W. C. MEYER.

WELT SEAM TRIMMING MACHINE.

No. 590,831. Patented Sept. 28, 1897.

FIG. 2.

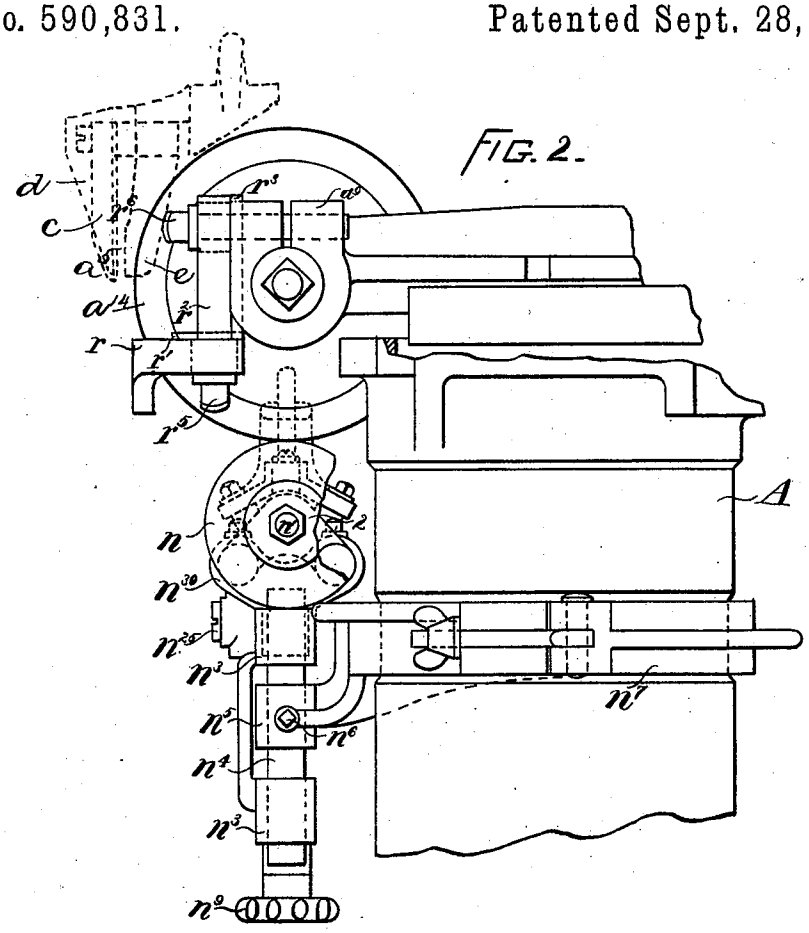

WITNESSES.
Harry O. Robinson.
F. H. Davis.

INVENTORS
Zachary T. French
William C. Meyer
by B. Drury his atty.

THE NORRIS PETERS CO., PHOTO-LITHO., WASHINGTON, D. C.

UNITED STATES PATENT OFFICE.

ZACHARY T. FRENCH AND WILLIAM C. MEYER, OF BOSTON, MASSACHUSETTS.

WELT-SEAM-TRIMMING MACHINE.

SPECIFICATION forming part of Letters Patent No. 590,831, dated September 28, 1897.

Application filed May 27, 1896. Serial No. 593,244. (No model.)

To all whom it may concern:

Be it known that we, ZACHARY T. FRENCH and WILLIAM C. MEYER, of Boston, county of Suffolk, State of Massachusetts, have invented an Improvement in Welt-Seam-Trimming Machines, of which the following description, in connection with the accompanying drawings, is a specification, like letters and figures on the drawings representing like parts.

In United States Letters Patent No. 558,379, dated April 14, 1896, a welt-seam-trimming machine is shown wherein a crown-knife is employed as the welt-seam-trimming knife, it having a flaring flange sharpened at the edge. For the production of good work this knife should at all times be very sharp, and hence a grinding-wheel was provided adapted to be moved into and out of engagement or contact with said knife whenever desired. In practice, however, we find that to operate such a grinding-wheel requires considerable attention and consumes considerable time, and, furthermore, cannot be operated while the welt-seam is being trimmed for the reason that the operator is holding the work with both hands. Therefore it is necessary to provide means whereby the grinding-wheel and trimming-knife may be repeatedly brought into engagement while the machine is in operation, and, if desired, while the knife is operating to trim the welt-seam, the intervals of time during which said parts are in engagement being quite short—as, for instance, we may repeatedly move the grinding-wheel into engagement with the knife.

Our invention therefore has for one of its objects to improve the construction of the means employed for thus repeatedly moving the grinding-wheel into engagement with the knife.

A crown-knife is arranged to work across the space formed between two rests, and the work is held pressed against said rests with the welt-seam between them; and another object of this invention is to make the lowermost rest adjustable, so that the angle of the work presented to the knife may be changed.

Figure 1 shows in front elevation a welt-seam-trimming machine provided with grinding mechanism for the knife and an adjustable rest or work-support in front of said knife embodying our invention; and Fig. 2, a right-hand side view of the lower part of the machine shown in Fig. 1, showing in end elevation said grinding mechanism and work-support or rest.

The main framework comprises, essentially, a base A, mounted upon a column A′, and side pieces B, erected upon said base.

A crown-knife a^5, having a tapering flange sharpened at the edge and secured to a sleeve a^4 or otherwise supported and driven by any suitable means, are all as in the Letters Patent aforesaid, to which reference may be had, and so also in said patent will be found the upper work-support c, which is adapted to enter the crease, and the feeding mechanism for the work.

The work-support or rest r is located a short distance below the work-support c, and when the work is in position it will be seen that the welt-seam enters the space between said work-supports or rests c and r, and the knife enters and works across the space between said work-supports in trimming the welt-seam.

The work-support or rest r is formed with a dovetailed projection r', which enters a correspondingly-shaped groove formed in the under side of a block r^2, said block having upon its rear side a dovetailed projection r^3, which enters a correspondingly-shaped groove in the block a^9 on the shaft a^8. A set-screw r^5 passes up through the part r, and another set-screw r^6 passes in through the part r^2, and when said set-screws are loosened the part r may be moved in and out with relation to the knife and the part r^2 may be moved up and down. In either case the work-support or rest r is adjusted with relation to the rest c, so that the angle of the work is changed.

The grinding mechanism or attachment consists of a grinding-wheel n', held securely by means of clamping-plates 2 2 on a shaft n', having its bearings in a box n^2 and in two end blocks n^{30} n^{30}, located one at each end of said box n^2, and said end blocks n^{30} each have two holes bored through them horizontally side by side, the corresponding holes of each block being in alinement. Thus the bearing-box n^2 and end blocks n^{30} n^{30} together serve as a supporting-frame for the grinding-wheel shaft.

A frame 20 has two ears n^{31} n^{31}, each formed with a horizontal hole through it, and a rod or bar, as n^{32}, passes through the hole in each ear n^{31} and by means of a set-screw is fixedly held in place, said rods or bars n^{32} projecting in opposite ways from said ears n^{31} at or about equal distances and adapted to enter the holes in the end blocks n^{30} n^{30}, serving as bearings on which said end blocks and parts connected thereto are free to slide back and forth.

The grinding-wheel n is located beneath the crown-knife a^5 and is moved back and forth with the shaft n' from one to the other side of said knife, engaging the beveled edge thereof as it passes in each direction, thereby repeatedly contacting with or engaging it.

The frame 20 is provided with ears n^3 n^3, there being two pairs of ears, one pair at each side of the frame, and said ears are bored with vertical holes, which receive vertical guide-rods n^4 n^4, fixedly supported in like ears or projections n^5 n^5 by means of set-screws n^6 n^6, said ears or projections n^5 n^5 projecting from a clamp-like ring n^7, which encircles or embraces the column A and is secured thereto by a detachable fastening.

The frame 20 has at its lower end a cross-piece or connection n^8, which receives and furnishes a bearing for a hand-screw n^9, which passes up through it and thence up through an ear n^{10}, also projecting from the clamp-like ring n^7, so that by turning said hand-screw n^9 said frame 20 and parts carried by it may be vertically adjusted.

The shaft n', carrying the grinding-wheel n, has secured to it a belt-pulley n^{12}, by means of which it is continuously rotated as it travels back and forth across the beveled face or edge of the rotating knife a^5. As a means for thus moving the shaft n' back and forth we have herein formed on or secured to said shaft n' a worm n^{14}, (see dotted lines, Fig. 1,) which engages a worm-wheel n^{15}, secured to a shaft n^{25}, mounted in suitable bearings in a part of the frame connected with one of the end blocks, and to one side or face of said worm-wheel n^{15} a crank-pin n^{16} (see dotted lines) is secured, upon or to which a link n^{17} is loosely connected, the opposite end of said link being loosely or pivotally connected with the frame 20 or other fixed point, and as the shaft n' is revolved by the belt-pulley n^{12} the worm n^{14} will be correspondingly rotated, driving the worm-wheel n^{15}, and by means of its crank connection with the frame the shaft n' and parts connected therewith will be moved back and forth or reciprocated longitudinally. Thus it will be seen that both the trimming-knife and grinding-wheel are continuously rotated and that one of said parts is repeatedly moved into and out of engagement with the other—as, for instance, the grinding-wheel is moved back and forth across the edge of or into and out of engagement with the knife. Furthermore, it will be seen that as means are provided for moving the grinding-wheel, as shown, little or no attention on the part of the operator is required and that the grinding-wheel will be kept in engagement with the knife but for short intervals of time.

We claim—

1. In a welt-seam-trimming machine, a grinding-wheel, its shaft, a supporting-frame for said shaft having a bearing in which it is free to rotate, a frame constructed and arranged to receive and support said shaft-supporting frame having rods upon which said shaft-supporting frame is free to slide in the direction of the length of the shaft, means for rotating said shaft, and means for moving its supporting-frame back and forth, to thereby rotate the grinding-wheel and cause it to automatically travel back and forth across the beveled cutting edge of the trimming-knife, substantially as described.

2. In a welt-seam-trimming machine, a grinding-wheel, its shaft, a supporting-frame for said shaft having a bearing in which it is free to rotate, a frame constructed and arranged to receive and support said shaft-supporting frame having rods upon which said shaft-supporting frame is free to slide in the direction of the length of the shaft, means for vertically adjusting said frame, means for rotating said shaft, and means for moving its supporting-frame back and forth, to thereby rotate the grinding-wheel and cause it to automatically travel back and forth across the beveled cutting edge of the trimming-knife, substantially as described.

3. In a welt-seam-trimming machine, a grinding-wheel, its shaft, a supporting-frame for said shaft having horizontal holes through it, a frame having horizontal rods upon which said shaft-supporting frame slides, a belt-pulley n^{12}, fixed to said shaft, a worm n^{14}, formed on or secured to said shaft, worm-wheel n^{15}, bearings therefor attached to the shaft-supporting frame, a crank-pin on said worm-wheel, a link n^{17}, connected at one end with said crank-pin and at the other end with a fixed point, whereby said grinding-wheel is rotated and moved back and forth beneath and across the beveled cutting edge of the trimming-knife, substantially as described.

4. In a welt-seam-trimming machine, a grinding-wheel, its shaft, a supporting-frame for said shaft having a bearing in which it is free to rotate, a frame constructed and arranged to receive and support said shaft-supporting frame having rods upon which said shaft-supporting frame is free to slide in the direction of the length of the shaft, a clamp-like ring embracing the column of the machine, having vertical rods upon which said frame is vertically adjustable, means for rotating said shaft, and means for moving its supporting-frame back and forth, to thereby rotate the grinding-wheel and cause it to automatically travel back and forth across the beveled cutting edge of the trimming-knife, substantially as described.

5. In a welt-seam-trimming machine, a crown-knife having a flaring flange and two work-supports as *c* and *r*, located a short distance apart to receive the welt-seam between them, said knife working in and across said space, the work-support *r* being located in front of said knife and made adjustable in and out, substantially as described.

6. In a welt-seam-trimming machine, a crown-knife, having a flaring flange and two work-supports as *c* and *r*, located a short distance apart to receive a welt-seam between them, said knife working across said space, the work-support *r* being adjustable in a vertical line toward and from the work-support *c*, substantially as described.

In testimony whereof we have signed our names to this specification in the presence of two subscribing witnesses.

ZACHARY T. FRENCH.
WILLIAM C. MEYER.

Witnesses:
F. H. DAVIS,
B. J. NOYES.