J. F. RUTZ & F. A. GAUGER.

TUB FIXTURE.

APPLICATION FILED APR. 2, 1917.

1,261,298.

Patented Apr. 2, 1918.

Fig. 1.

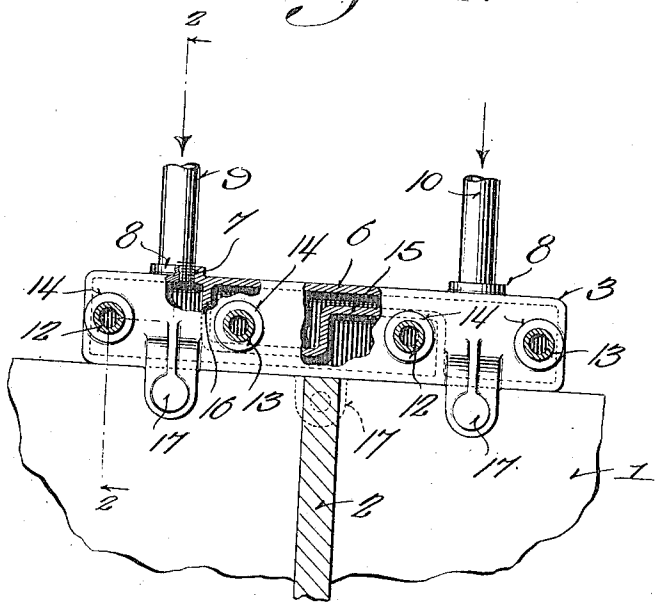

Fig. 2.

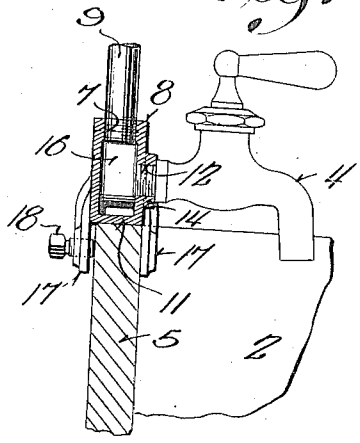

Witness:

Witness:

Inventors:
Julius F. Rutz,
Frank A. Gauger
By Geo. W. Young
Attorney

SACHETT & WILHELMS CORP. N.Y.

UNITED STATES PATENT OFFICE.

JULIUS F. RUTZ AND FRANK A. GAUGER, OF MILWAUKEE, WISCONSIN.

TUB-FIXTURE.

1,261,298. Specification of Letters Patent. Patented Apr. 2, 1918.

Application filed April 2, 1917. Serial No. 159,152.

To all whom it may concern:

Be it known that we, JULIUS F. RUTZ and FRANK A. GAUGER, both citizens of the United States, and residents of Milwaukee, in the county of Milwaukee and State of Wisconsin, have invented certain new and useful Improvements in Tub-Fixtures; and we do hereby declare that the following is a full, clear, and exact description thereof.

Our invention relates to new and useful improvements in plumbing supplies, more particularly to stationary wash tub fixtures.

Wash tubs of this nature are usually formed of slate or a combination material and it has been found that it is extremely difficult to properly drill openings through the walls of the tubs for the reception of hot and cold water pipes. In many instances walls of the tubs are cracked or otherwise injured, therefore the present invention has been designed to overcome this difficulty and also to lessen the cost of installation.

An additional object of the present invention is to produce a unitary fixture which can be easily secured to the stationary tubs and which will take the place of a considerable amount of piping which is necessary in the present methods.

A still further object is to provide a fixture of this character which can be formed from a single metal casting of appropriate shape.

With the foregoing objects and advantages in view the invention resides in the novel features of construction, combination and arrangement of parts which will be hereinafter more particularly described and claimed, and shown in the drawing wherein:

Figure 1 represents a front elevation, partly in section of our improved fixture attached to a fragment of a pair of stationary wash tubs;

Fig. 2 is a vertical transverse section taken substantially on the plane of the line 2—2 of Fig. 1.

Ordinarily a pair of wash tubs 1 are placed end to end, and frequently a single division wall 2 serves to divide a rectangular tub of large size into two receptacles. In each of these tubs thus formed it is necessary to provide hot and cold water supplies, the faucets of the same usually being disposed adjacent the wall 2 so that the single hot water supply pipe may be readily connected to both hot water faucets with a small amount of piping. The same is true of the cold water supply and its faucets. It is also customary to have the hot and cold water faucets on each side of the partition wall in relative position.

To eliminate the customary piping an elongated rectangular casing 3 has been constructed, the same being of sufficient length to readily permit two pairs of faucets 4 to be connected therewith, one pair being disposed on each side of the wall 2 and above the same. From Fig. 2 it will be noted that in cross-section the casing 3 is also rectangular and is of a width only slightly greater than the thickness of the rear wall 5 of the tubs, the bottom of said casing being flat to rest on the flat upper edge of said wall.

The top 6 of the casing has a pair of openings 7 formed therein adjacent the opposite ends, said openings being surrounded by nipples 8 and receive the hot and cold water supply pipes 9 and 10 respectively. Although the nipples in the present application are shown to be internally threaded, it is obvious that the pipes 9 and 10 may be joined thereto by either a male or female connection. In installing ordinary stationary tubs the hot and cold water pipes are extended downwardly as shown in Fig. 1, the hot water pipe being on one side of the wall 2 and the cold water pipe on the other, and this same arrangement is carried out with the improved fixture, the openings 7 in the top of the casing thereof being disposed one on each side of said wall 2, when the same is in position.

The front wall 11 of the casing 3 has two pairs of openings 12 and 13 formed therein, the same being surrounded by nipples 14 with which the faucets 4 are connected. One opening 12 and one opening 13 is disposed on each side of the division wall of the tubs, the opening 12 forming an outlet for the hot water from the supply pipe 9, while the cold water from the pipe 10 flows from the other opening 13.

To separate the two sets of outlet openings and retain them in their same relative positions in each tub an off-set partition wall 15 is formed in the casing 3, the main portions thereof extending longitudinally of the casing and parallel to the top and bottom thereof. In Fig. 1 it will be seen that

one portion of this wall 15 is disposed above the inner outlet opening 12 and another portion is placed below the inner outlet opening 13. The opposite end portions of the wall 15 are extended laterally in opposite directions as at 16 and connected with the top and bottom of the casing, thereby separating the openings 12 from the openings 13.

By this simple arrangement hot water from the pipe 9 may be caused to flow from the faucets 4 which are connected with the openings 12 when the same are turned on. Similarly the cold water may flow from either of the openings 13.

It is advisable to provide means for aiding the natural rigidity of the pipes 9 and 10 to hold the casing 3 against shifting along the top of the back wall of the tubs. Therefore attaching means have been provided, the same preferably consisting of one or more arms 17 for disposition on each side of said back wall. In the present device two of the arms 17 depend from the outer side of the casing 3, one on each side of the division wall 2, and one extends from the rear of the casing. The latter is preferably provided with a threaded opening to receive a set screw or bolt 18 which, when tightened will engage the tubs.

From the foregoing description it will be seen that a very simply constructed fixture has been produced which, in view of its relatively small size will require less space than the usual necessary piping and will permit the stationary tubs to be placed closer to the wall of the building. It is also obvious that the cost of casting this one piece fixture as well as the expense of installation will be considerably less than with the usual piping, inasmuch as the latter must be carefully cut to size and more or less waste always occurs.

We claim:

The herein described article of manufacture comprising a horizontally elongated rectangular casing relatively narrow in cross section and having its bottom flat and adapted to rest on the rear edge of a pair of stationary wash tubs midway the partition wall thereof, one side of said casing having a pair of spaced inlet openings, one being disposed adjacent each end of the casing, said casing also having four outlet openings in the front wall thereof, said outlet openings being spaced substantially equal distances apart and arranged with their centers in a plane substantially parallel to the longitudinal axis of the casing, a vertically offset partition wall disposed between the inner pair of outlet openings and extended longitudinally of the casing, the opposite ends of said partition wall being extended laterally in opposite directions between the outer pairs of outlet openings and connected with the adjacent walls of the casings, whereby to separate one pair of alternate outlet openings and an inlet opening from the other openings, a pair of attaching arms extending from the front wall of said casing and depended below the bottom thereof to engage said wash tubs, one arm being disposed on each side of the partition wall thereof, an attaching arm extended from the rear wall of the casing and below the bottom thereof, said arm being positioned intermediate the first mentioned arms, and a set screw carried by the last mentioned arm.

In testimony that we claim the foregoing we have hereunto set our hands at Milwaukee, in the county of Milwaukee and State of Wisconsin.

JULIUS F. RUTZ.
FRANK A. GAUGER.

Copies of this patent may be obtained for five cents each, by addressing the "Commissioner of Patents, Washington, D. C."