Nov. 21, 1950 J. A. HOWENSTINE 2,530,525

SIGN STRUCTURE

Filed Nov. 28, 1947

Fig. 1.

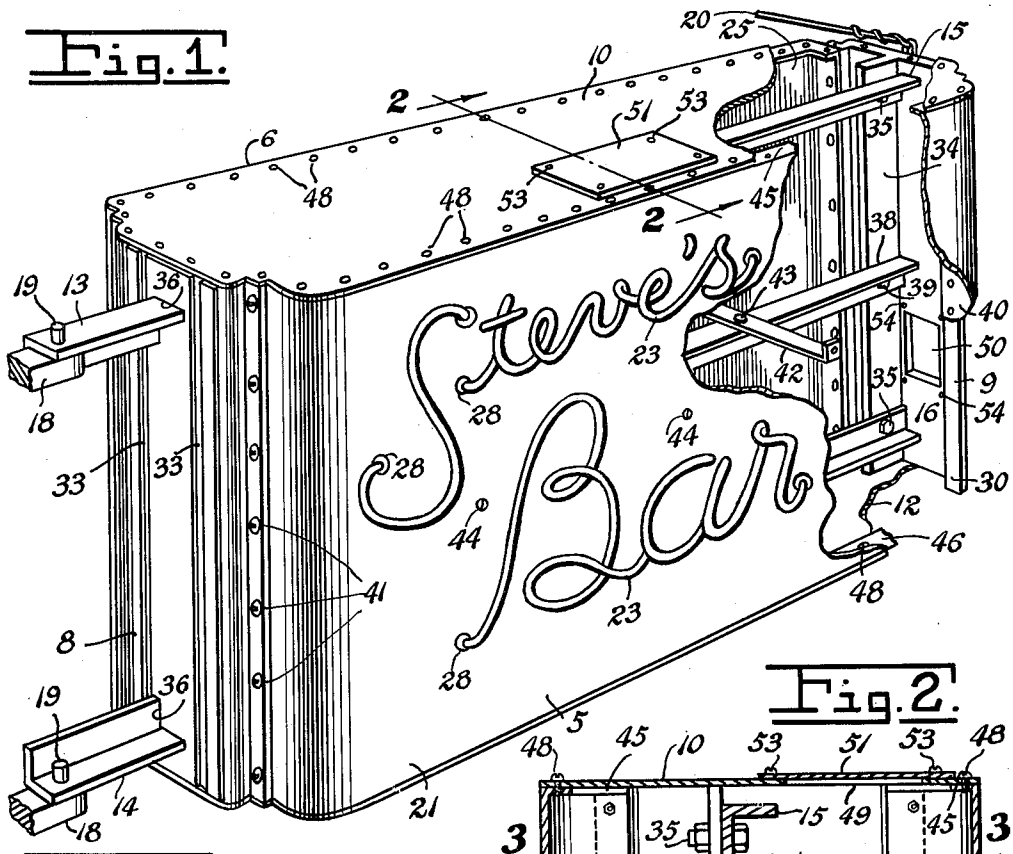

Fig. 2.

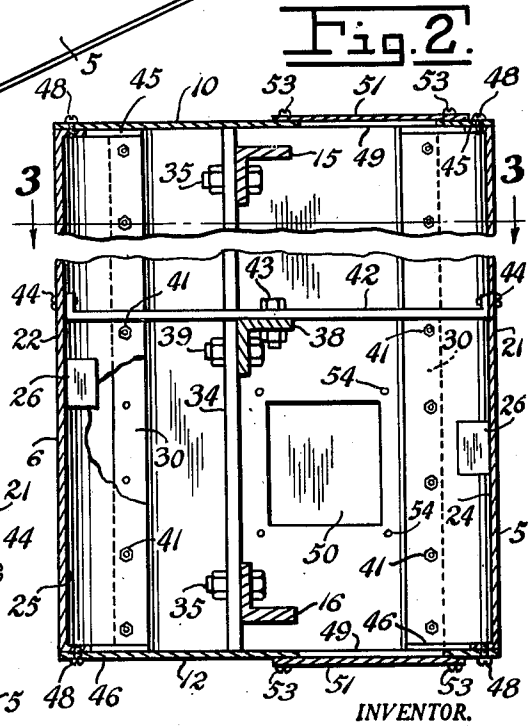

Fig. 3.

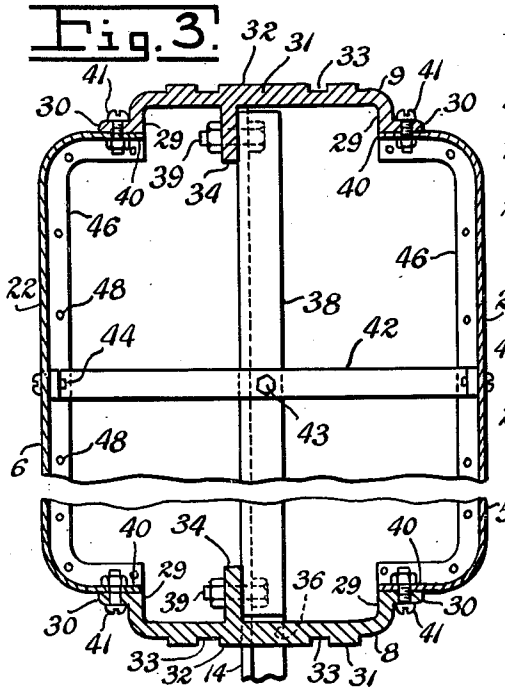

INVENTOR.
JAMES A. HOWENSTINE
BY Zugelter & Zugelter
Attys.

Patented Nov. 21, 1950

2,530,525

UNITED STATES PATENT OFFICE

2,530,525

SIGN STRUCTURE

James A. Howenstine, Lima, Ohio, assignor to Neon Products, Inc., Lima, Ohio, a corporation of Ohio

Application November 28, 1947, Serial No. 788,715

5 Claims. (Cl. 40—125)

1

This invention relates to a sign structure, and more particularly to the construction of signs having opposed display faces arranged in spaced parallelism.

One of the objects of the invention is to provide a simplified method of constructing display signs and the like without sacrificing sturdiness or rigidity thereof, while at the same time greatly reducing the cost of manufacture.

Another object is to provide a sign structure in which structural elements thereof serve also as ornamentation, thereby effecting a substantial saving of labor and materials in manufacture.

A further object is to provide a sign structure the frame-work of which incorporates the use of extruded metal of low cost and light weight, such as aluminum.

Another object is to provide a double-faced sign structure which may be illuminated, provision being made for housing certain elements of the illuminating means within the structure in such manner as to render them readily accessible for replacement or repairs.

These and other objects and advantages are attained by the means described herein and illustrated upon the accompanying drawing, in which:

Fig. 1 is a perspective view of a sign constructed in accordance with the following specifications, parts of the sign being broken away for disclosing structural details thereof.

Fig. 2 is an enlarged cross-sectional view of the sign, taken on line 2—2 of Fig. 1.

Fig. 3 is an enlarged longitudinal cross-sectional view, taken on line 3—3 of Fig. 2.

The construction of outdoor display signs of the overhanging type formerly involved the application of decorative trim material over the structural frame work in order to render the sign pleasing in appearance. Needless to say, this procedure contributed substantially to the cost of such signs, both in labor and material. The added weight of such decorative material also required the provision of sturdier suspension means, thus further adding to the cost of the completed signs.

The device of the present invention employs the use of rigid metal extrusions in its framework, the extruded members serving both structurally and decoratively, as will presently be shown. Since the construction of the device is based upon sound engineering principles, rigidity is not sacrificed, but rather enhanced by elimination of structural parts. The extruded metal employed is preferably aluminum because of its light

2

weight and because the extrusion thereof provides the metal with a smooth surface requiring no finishing operations, an economy factor of great importance.

Referring to Fig. 1, the typical sign shown therein comprises opposed sign panels 5 and 6 spaced apart and mounted on end plates 8 and 9, the sign panels and end plates in the exemplified form being of substantially the same height and surmounted by a top cover panel 10. A panel similar to the top panel 10 may serve to close the bottom of the sign, as indicated at 12. Suspension means may include a pair of arms 13 and 14, which may be extensions of the interior horizontal frame members 15 and 16 protruding through the extruded side plate 8. The sign may be mounted upon a pair of brackets 18 fixed to a facade or the like, the suspension arms 13 and 14 being apertured to receive bolts or bracket pintles 19. A guy wire 20 or the like may complete the suspension means, if necessary.

The outer faces 21 and 22 of the sign panels may have mounted thereon any suitable illuminating means, for example, neon gas tubes 23 of any desired wording, the illumination of which may require the use of suitable transformers 26 located within the structure. The inner faces 24 and 25 of the sign panels, or any other structural element, may support the transformers. Suitable openings 28 are provided in the sign panels through which the neon tube terminals extend inwardly for making proper electrical connections, in accordance with common practice. In signs not requiring illumination, openings 28 will be eliminated, of course.

Since decorative outlines are a desirable characteristic in a display sign, the device of the present invention is designed to take full advantage of decorative possibilities at substantially no increase in cost over ordinary signs. The end plates 8 and 9, for instance, which serve a structural function, are so fabricated as to serve ornamentally as well, thus eliminating the necessity of applying a cap or molding over the ends of the sign in order to conceal unsightly framework, as was the case formerly.

The end plates 8 and 9 may be cut to any desired length from long strips of extruded metal, which may be of any ornamental configuration in cross section. In the exemplified form, shown in cross section in Fig. 3, the sides of the end plates are inwardly turned, the resulting legs 29 of which are provided with outwardly turned mounting flanges 30, said flanges being parallel with the body portion 31. The outer face 32 of the end

plates may be suitably embellished during the extrusion process by fluting or other longitudinal markings, as indicated at 33, within the limits of the extrusion die.

An integral longitudinal rib 34 extends inwardly of each end plate, said rib being apertured to receive rivets, screws, or bolts 35 which secure the similarly apertured horizontal frame members 15 and 16 to the end plates 8 and 9. The ribs 34 may be located off center between the legs 29, a sufficient distance to permit alignment of the longitudinal axis of the frame members 15 and 16 with the longitudinal median line of the sign, thereby to maintain the sign in balance when in suspended condition. The offset disposition of the ribs likewise affords greater accessibility to the interior of the sign through the openings 50, which may be provided in either or both of the end plates. Near the top and bottom ends of plate 8 (Fig. 1), suitable openings 36 permit the portions 13 and 14 of the horizontal frame members 15 and 16, respectively, to extend therethrough.

One or more intermediate horizontal frame members 38 may be provided between frame members 15 and 16, said intermediate member being secured to the end plate ribs 34 in the same manner as the members 15 and 16, as indicated at 39.

Constructed as described above, the sign frame provides a rigid structure for the sign panels 5 and 6. As clearly shown in Fig. 3, each sign panel may have its ends turned inwardly at substantial right angles to the face thereof, to provide mounting margins 40. These margins 40 may be provided with apertures to register with similar apertures in the end plate mounting flanges 30, for detachably mounting the sign panels 5 and 6 to the end plates 8 and 9, as by means of screws or bolts 41.

Because of the expanse of the sign panels 5 and 6, means may be provided for precluding vibration, distortion, or buckling of the plane surfaces thereof. In the exemplified form, one or more cross braces 42 may be mounted upon the intermediate frame member 38, transversely thereof, by means of screws or bolts 43, the ends of said braces being formed to abut the inner faces of the sign panels and adapted to receive the screws 44 threaded therein from the outer faces of said sign panels.

The upper and lower edges of the sign panels 5 and 6 may be provided with flanges 45 and 46, respectively, said flanges being apertured to register with similar apertures in the top and bottom cover panels 10 and 12 for receiving the cover mounting screws 48.

In order to gain access to the interior of the sign for the replacement or repair of transformers, and for making other repairs from time to time as needed, one or more openings may be provided, such as the top and bottom openings 49 and the end plate opening 50. Suitable cover plates 51 and 52, mounted hingedly or perhaps detachably as by means of screws 53 and 54, may be provided for closing the openings. The number of access openings will, of course, depend upon the size of the sign. The openings will be of sufficient size to permit a workman to thrust his hand therethrough while making repairs to the sign.

Constructed in accordance with the foregoing specifications, the sign of the present invention combines utility with attractiveness, without sacrificing sturdiness or rigidity. The use of the extruded end plates 8 and 9, as hereinbefore recited, adds to the economy of the completed sign, since the plates serve both structurally and ornamentally.

While only one end plate design is shown upon the drawings, many other configurations are possible within the limits of the extrusion process, as will be understood. It will be further understood, of course, that various structural changes and modifications are possible within the scope of the appended claims, without departing from the spirit of the invention. Thus, the side panels may be furnished with forms of lighting means other than gaseous discharge tubes, and in some instances the lighting means may be eliminated entirely. The access openings such as 49 and 50 may be located to most advantageously service the sign structure and its appurtenances.

What is claimed is:

1. In a sign construction, the combination of a pair of spaced substantially parallel display panels each having opposed end margins, and opposed longitudinal edges, at least one rigid end plate spanning corresponding end margins of the panels, means connecting said end margins to the rigid plate, an integral rib on the end plate disposed interiorly of the sign construction between and in parallelism with the display panels, a second end plate spanning the remaining corresponding end margins of the panels, said second end plate being apertured in alignment with the rib of the first mentioned end plate, a longitudinal frame member having one end projecting through said aperture, and an opposite end fixed to the rib aforesaid, and a closure panel spanning the opposed longitudinal edges of the display panels from end to end thereof.

2. In a sign construction, the combination of a pair of spaced substantially parallel display panels each having opposed end margins, and opposed longitudinal edges, at least one rigid end plate spanning corresponding end margins of the panels, means connecting said end margins to the rigid plate, an integral rib on the end plate disposed interiorly of the sign construction between and in parallelism with the display panels, a second end plate spanning the remaining corresponding end margins of the panels, said second end plate being apertured in alignment with the rib of the first mentioned end plate, a longitudinal frame member having one end projecting through said aperture, and an opposite end fixed to the rib aforesaid, at least one intermediate longitudinal frame member between the display panels extending from one end plate to the other, bracing means fixed transversely of the intermediate frame member to abut the inner faces of the display panels, and a closure panel spanning the opposed longitudinal edges of the display panels from end to end thereof.

3. In a sign construction, the combination of a pair of spaced substantially parallel display panels each having opposed end margins, and opposed longitudinal edges, a pair of rigid end plates each spanning corresponding end margins of the panels, means connecting said end margins to the rigid plates, an integral rib on each end plate disposed interiorly of the sign construction between and in parallelism with the display panels, one of said end plates being apertured adjacent to the rib thereof, longitudinal frame members each extending through an aperture of the apertured end plate, and means fixing said frame members to the inwardly extending ribs of both end plates.

4. In a sign construction, the combination of a pair of spaced substantially parallel display panels each having opposed end margins, and opposed longitudinal edges, a pair of rigid end plates each spanning corresponding end margins of the panels, means connecting said end margins to the rigid plates, an integral rib on each end plate disposed interiorly of the sign construction between and in parallelism with the display panels, one of said end plates being apertured adjacent to the rib thereof, longitudinal frame members each extending through an aperture of the apertured end plate, means fixing said frame members to the inwardly extending ribs of both end plates, closure panels spanning the opposed longitudinal edges of the display panels from end to end thereof, and structural bracing means for the display panels mounted upon the end plate ribs.

5. In a sign construction, the combination of a pair of spaced substantially parallel display panels each having opposed longitudinal margins and opposed end margins, a pair of rigid metal end plates each spanning corresponding end margins of the panels, means for securing said end margins to the rigid plates, each of said plates having a longitudinally ribbed face disposed exteriorly of the sign for strengthening

and ornamenting the sign structure, each of said plates having an integral longitudinal rib disposed interiorly of the sign between and in parallelism with the display panels, one of said end plates being apertured adjacent to the interior rib thereof, longitudinal frame members each extending through an aperture of the apertured end plate, means for fixing said frame members to the inwardly extending ribs of both end plates, end portions of said longitudinal frame members extending outwardly of the apertured end plate, means attached to the end portions of said longitudinal frame members for supporting the sign, and a pair of closure panels each spanning the opposed longitudinal edges of the display panels from end to end thereof.

JAMES A. HOWENSTINE.

REFERENCES CITED

The following references are of record in the file of this patent:

UNITED STATES PATENTS

Number	Name	Date
1,602,892	Frank	Oct. 12, 1926
1,673,962	Wiley	June 19, 1928
1,844,352	Ferree	Feb. 9, 1932