United States Patent

Adler

[15] 3,705,739

[45] Dec. 12, 1972

[54] **PANIC LOCK DEVICE**

[72] Inventor: **Norman R. Adler,** Fitchburg, Mass.

[73] Assignee: **Ilco Corporation,** Fitchburg, Mass.

[22] Filed: **July 7, 1971**

[21] Appl. No.: **160,421**

[52] **U.S. Cl.** **292/92,** 16/48.5, 49/1, 292/207, 292/DIG. 66

[51] **Int. Cl.**.....**E05c 19/00**

[58] **Field of Search**....70/292, 465; 292/92, DIG. 66, 292/207, 150, 106; 16/48.5; 49/1, 2, 3

[56] **References Cited**

UNITED STATES PATENTS

3,598,202	8/1971	Kirsch et al.	49/1
3,645,572	2/1972	McFarlane	292/21
3,073,142	1/1963	Stebbins	70/92

Primary Examiner—Joseph M. McGlynn
Assistant Examiner—Robert A. Hafer
Attorney—Mark T. Basseches et al.

[57] **ABSTRACT**

An improved panic lock device of the type in which a latch bolt is retracted responsive to forces exerted on an eccentrically weighted, pivotally mounted panic bar. The improvement relates to a shear pin assembly operatively projected into position to prevent downward pivotal movement of the bar and, hence, premature retraction of the latch bolt should the bar support spring lose their temper, as would be the case if the latter were subjected to high temperature conditions.

7 Claims, 4 Drawing Figures

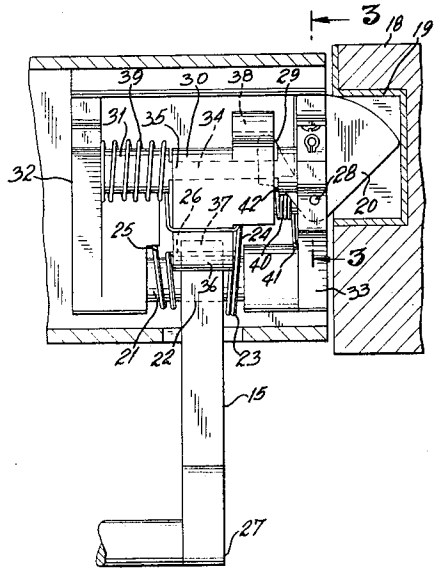

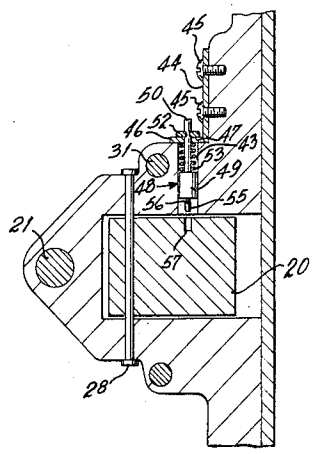

FIG. 1

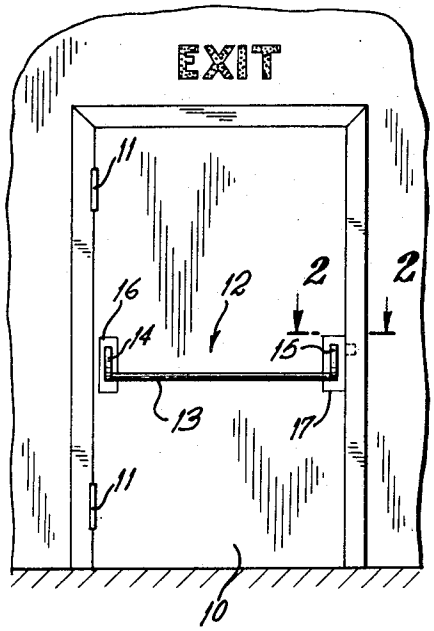

FIG. 2

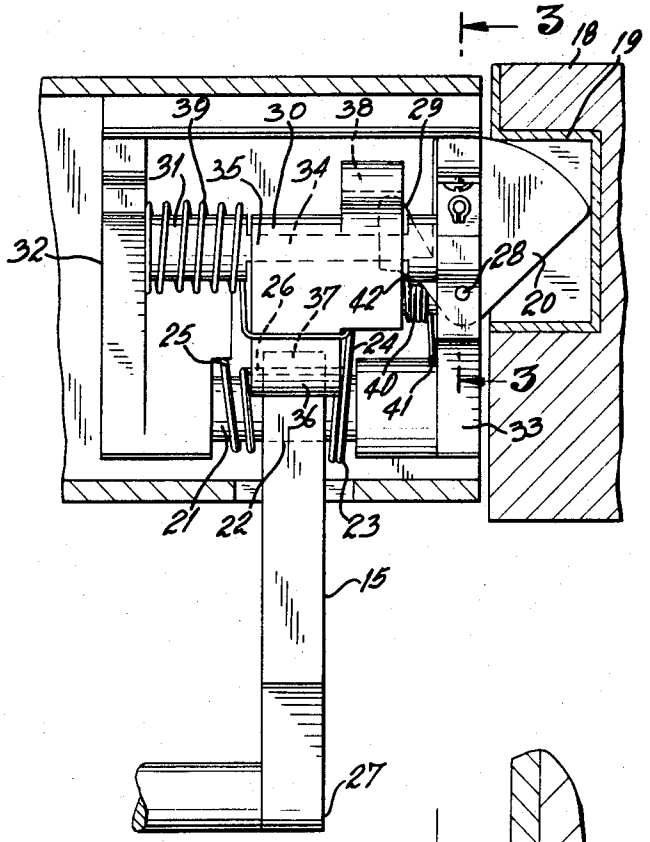

FIG. 3

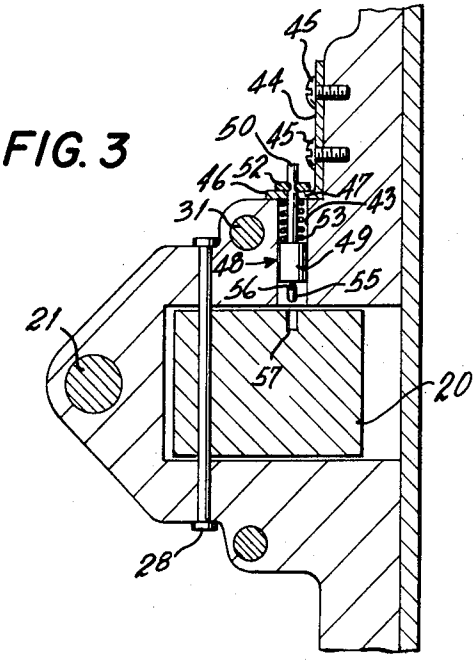

FIG. 4

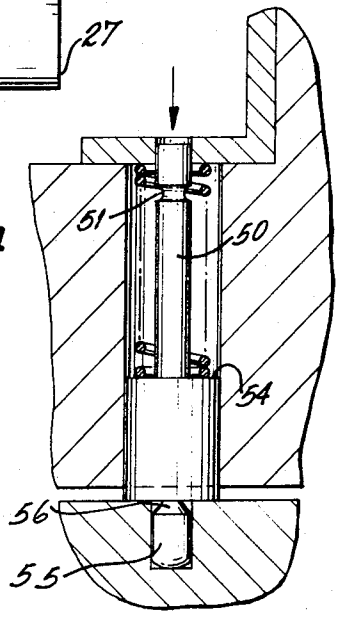

INVENTOR.
NORMAN R. ADLER

BY Mark J. Janeches

ATTORNEY

PANIC LOCK DEVICE

BACKGROUND OF THE INVENTION

1. Field of the Invention

This invention is in the field of panic lock devices, and more particularly panic lock devices of the type used in institutions.

2. The Prior Art

As is well known, panic lock devices generally are used in buildings where large numbers of people are expected to congregate. Such devices employ on the inner face of the door an extended panic bar effective both to retract the latch bolt and thereafter open the door controlled thereby in response to pressure exerted anywhere along the bar.

In typical panic lock devices, the panic bar comprises a horizontal bar member having one or more struts extending from the ends of the bar, the struts terminating in horizontally disposed bearing members mounted in spaced casings fixed to the inner door face. It will thus be evident that a substantial turning moment is exerted on the bearings due to the moment arm or spacing between the bar and the bearings. This turning moment is typically resisted by spring mechanisms in the casings which prevent downward pivotal movement of the bar under gravitational influences, permitting such movement only when extrinsic manual forces are exerted against the bar.

The prior art devices operating on the above principle present a serious defect in that, where high temperature conditions are encountered, as in the case of a fire in reasonably close adjacency to the panic lock apparatus, the bar support springs lose their temper, with the result that the eccentric weight of the bar is, in and of itself, sufficient to induce a pivotal movement of the bar, thereby withdrawing the latch bolt. Such withdrawal of the latch bolt is undesirable in cases of a fire in the building structure since the pressures generated by the fire may force the door to an open position, thereby increasing the draft, resulting in increased intensity of the fire and likelihood of spreading.

It is of course possible to increase the force exerted by the panic bar support springs and thereby delay the point at which such springs will be compromised. However, such solution is undesirable in that the forces required to depress the panic bar in normal operating conditions may be increased to the point where children and the infirm will have difficulty in depressing the bar.

Further, even reinforced springs will, under adverse heating conditions, eventually lose their temper to the point where the latch bolt will be retracted by the eccentric weight of the panic bar.

SUMMARY OF THE INVENTION

The present invention may be summarized as relating to a panic lock device having improved performance characteristics as respects its operation under fire conditions.

More particularly, the invention relates to a panic lock device which, when subjected to heating conditions which may be sufficient to cause a loss of temper of the panic bar support springs, will activate a shear pin mechanism which prevents the eccentric forces exerted by the bar from withdrawing the latch bolt, even though no forces are exerted by the bar support springs. The pin mechanism will not, however, prevent operation of the panic lock by an individual trapped within the building, pressure on the panic bar, in such instances, effecting a severing or shearing of the pin, followed by normal retraction of the latch bolt.

The use of a shear pin obviates the necessity of providing unduly strong bar support springs.

It is accordingly an object of the invention to provide a panic lock device having improved performance characteristics when subjected to high temperature conditions.

It is a further object of the invention to provide a device of the class described wherein there will be no likelihood of the latch bolt being withdrawn as a result of loss of temper of the panic door support springs.

A further object of the invention is the provision of a panic lock device wherein there is no possibility of accidental or inadvertent retraction of the latch bolt as a result of the exposure of the lock mechanism to heat, the mechanism in addition remaining responsive to pressures against the panic bar to function in a normal manner.

Still a further object of the invention is the provision of a panic lock mechanism which includes a shear pin controlled by a fusible link, the link functioning at a temperature well below the temperature at which the springs are likely to lose their temper to release the pin to prevent inadvertent or accidental retraction of the latch bolt.

To attain these objects and such further objects as may appear herein or be hereinafter pointed out, reference is made to the accompanying drawings, forming a part hereof, in which:

FIG. 1 is a front elevational view of a door having a panic bar installation;

FIG. 2 is a magnified horizontal section taken on the line 2—2 of FIG. 1;

FIG. 3 is a vertical section taken on the line 3—3 of FIG. 2;

FIG. 4 is a further magnified fragmentary section showing the position of the parts after a certain temperature has been achieved.

Referring now to the drawings, there is shown in FIG. 1 a door 10 mounted to swing outwardly by hinges 11, the door being operated by a panic bar assembly 12. The panic bar assembly includes a panic bar 13 having connecting links 14, 15 pivotally mounted within casings 16, 17 fixed to the door.

As is well known in installations of this type, the points of pivotal connection of the links 14, 15 to the casing 16, 17 are displaced vertically from the height of the bar 13 so that pressure against the bar and in the direction of opening of the door will cause a pivoting of the links, initially retracting the latch bolt and thereafter forcing the door open. By this arrangement, in the event of an emergency resulting in a panic situation, outward pressures exerted by the throng will, without manipulation of any handle, knob, etc., cause an opening of the door.

The actual linkage assembly whereby the latch bolt is retracted into the latch bolt casing 17 is conventional and forms no part of the present invention. Accordingly, such construction will be described only in such minimal detail as to permit an appreciation of the inventive contribution.

As best seen in FIG. 2, a door jamb 18 is provided with a strike receiver housing 19, within which housing the latch bolt 20 is retractably received.

As will be appreciated, the left hand casing 16, as shown in FIG. 1, functions merely pivotally to carry the link 14 of the panic bar, the right hand casing 17 carrying the retractor mechanism. This mechanism, in the illustrated embodiment, includes link trunnion 21 supported in the casing, the trunnion passing through bearing aperture 22 adjacent the inner end of the link 15.

A butterfly spring 23 is convoluted about the trunnion 21, the depending free ends 24, 25 of the spring bearing against fixed portions of the casing. As is conventional, the spring 23 includes a bridging segment 26 which engages in a notch (not shown) formed in the link 15. The spring is assembled in a loaded condition to provide a torque which pivots the end 27 in an upward direction about the trunnion 21 through energy stored in the spring.

It will be appreciated that when the bar 13 is actuated, additional energy is stored in the spring, which energy, when the bar is released, is effective to lift the bar back to its normal position.

It will be further appreciated that the left hand casing 16 incorporates a like trunnion and spring arrangement for pivotally mounting and applying a lifting force to the link 14.

The latch bolt 20 is pivotally mounted by means of a vertically directed pivot pin 28. The latch bolt includes an inwardly extending toe portion 29, position to be engaged by a latch bolt retractor mechanism next to be described.

The retractor mechanism includes a retractor cam 30 which is pivotally mounted about cross bar 31, the ends of which are supported by the side walls 32, 33 of the casing.

Cam 30 includes an internal bore 34, pivotally mounted on the narrow neck portion 35 of the cross bar 31. The retractor includes a forwardly extending lift finger 36 positioned directly above the inner end 37 of the link arm 15.

The retractor includes, in addition, a depending retractor finger 38 lying forwardly of the toe 29 of the latch bolt. A retractor spring 39 convoluted about the bar 31 causes the lift finger 36 to be pivoted downwardly against the inner end 37 of the link.

From the foregoing it will be appreciated that the essentially conventional retractor mechanism operates as follows. When the bar 13 is depressed or shifted toward the door, the link 15 will pivot about the trunnion 21, causing the inner end 37 to press against the under surface of and lift the lift finger 36 of the retractor 30, including a horizontal pivotal movement of the retractor about the bar 31. In the course of such horizontal pivotal movement, the retractor finger 38 engages the toe 29 of the latch bolt 20, inducing an anti-clockwise pivotal movement of the latter about the pin 28, thereby causing the same to be shifted into the interior of the casing and out of the strike housing 19.

A torsion spring 40 includes a first end 41 pressed against a fixed portion of the housing, the other end 42 of the spring being biased against a rear face of the toe 29 of the latch bolt. It will thus be understood that the spring 40 normally projects the latch bolt into its locking position, retraction being effected against the pressure of this spring.

In accordance with the improvement of the present invention, a counter bore 43 is formed in the casing, the counter bore overlying the latch bolt 20. A bracket 44 is fixed, as by screws 45, to the casing, the bracket including a horizontal leg 46 having a narrow aperture 47 formed therein, the aperture 47 being in registry with the bore 43.

A shear pin mechanism 48 is slidably received within the bore 43, the shear pin mechanism including a relatively wide guide section 49 and an upstanding plunger section 50 extending slidingly outwardly through the bore 47 in the leg 46 of the bracket.

As best seen in FIGS. 3 and 4, a narrowed neck 51 is formed on the plunger section 50, a short section of fusible metal wire or the like 52 being pressed into the neck, as shown in FIG. 3. A coil spring 53 is convoluted about the plunger under compression so that the upper end of the coil spring bears against the under surface of the leg 46 of the bracket 44, the lower end of the spring 53 bearing against an annular shoulder 54 defined by the upper end of the guide section 49 of the shear pin assembly.

The shear pin assembly 48 includes a shear pin segment 55 extending beneath the lowermost portion of the guide section 49, the shear pin section being separated from the main body of the shear pin assembly by a narrow neck portion 56.

The latch bolt 20 includes a receiver recess 57 which, in the projected or locked position of the latch bolt, is disposed immediately beneath the shearable segment 55 of the shear pin assembly.

The operation of the device will be evident from the preceding description.

When the lock assembly is subjected to high temperature conditions of a magnitude sufficient to remove the temper from the springs, it will be evident that the restraint against downward pivotal movement of the springs 23 against the panic bar will no longer be effective to prevent a downward pivotal movement of the panic bar assembly. Due to the weight of the assembly and the further fact that the other springs in the unit will, in all likelihood, similarly have lost their temper, the torque exerted by the eccentric weight of the panic bar unit will, in the absence of the shear pin assembly, be sufficient to cause a horizontal pivoting movement of the retractor and a consequent retraction of the latch bolt 20.

In a building which is on fire, it is quite common for considerable pressures of combustion to build up, which pressures would force the door open after the latch bolt has been retracted in the manner aforesaid, resulting in increased draft and consequent additional damage to the building structure. The shear pin assembly of the present invention precludes this series of events, while still permitting egress through the door should an occupant of the building apply pressure to the panic bar. In this connection, the fusible link 52 is selected to melt at a temperature well below the temperature at which the springs will lose their temper.

As will be readily apparent from a comparison of FIGS. 3 and 4, when the fusible link 52 has melted, spring 43 will project the pin assembly 48 downwardly until the shear pin section 55 thereof is received within the recess 57 in the latch bolt (FIG. 4). With the parts thus positioned, it will be evident, even assuming all the internal spring mechanisms to have been compromised,

that the torsional forces exerted by the eccentrically supported panic bar will merely result in inward pressure being exerted against the toe portion 29 of the latch bolt. Such pressure, however, cannot be effective to withdraw the latch bolt, due to the presence of the shear pin section in the receiver pocket. However, when a sufficient force is exerted against the bar 13, it will be evident that the pressure exerted by the retractor assembly against the toe 29 will be substantially increased to a value sufficient to shear the pin 55 at the narrow neck 56 thereof, whereby the latch bolt may be retracted and the door opened.

From the foregoing it will be evident that there is disclosed a panic lock assembly whereby a fusible link controlled, spring biased pin is automatically projected into position to prevent retraction of the latch bolt under extreme heat conditions, the pin assembly nonetheless permitting a single operation of the bar, should an occupant of the building seek to exit.

It will be appreciated that the novel shear pin concept may be adapted to a wide variety of panic door retractor assemblies. Thus, the invention is not to be taken as limited to the use of the specific retractor assembly illustrated, such assembly having been depicted for purposes of compliance with the Patent Laws. The invention is accordingly to be broadly construed within the scope of the appended claims.

Having thus described the invention and illustrated its use, what is claimed as new and is desired to be secured by Letters Patent is:

1. A panic lock device comprising a latch bolt casing, a panic bar eccentrically mounted to said casing for movement about a horizontal pivot axis and gravitationally urged in a first pivotal direction, bar support spring means yieldingly urging said bar against movement in said pivotal direction, a latch bolt mounted for reciprocal movement inwardly and outwardly of said casing, latch bolt operator means interposed between said panic bar and bolt for retracting said bolt responsive to movement of said bar in said first pivotal direction, shear pin means mounted in said casing, spring means urging said shear pin means in a first direction, low melting link means interposed between said shear pin means and casing and normally blocking movement of said pin in said first direction, and a shear pin socket member positioned to receive a portion of said pin responsive to melting of said link means, said shear pin in said socket received position preventing movement of said bar in said first pivotal direction and, hence, retraction of said latch bolt under said gravitational forces, while permitting said movement of said parts responsive to forces against said bar sufficient to shear said pin.

2. The lock device of claim 1 wherein said link material melts at a temperature below the temperature at which said bar support spring means loses its temper.

3. The device of claim 1 wherein said shear pin receiver socket is formed on said latch bolt, and said pin is mounted in a bore formed in said casing.

4. The device of claim 3 wherein said shear pin includes an annular extension portion of larger diameter than said socket, said extension portion being located intermediate the length of said pin, said pin including a weakened neck portion positioned to lie at the interface between said extension and bolt when portions of said pin are received in said socket.

5. The device of claim 4 wherein said neck portion is disposed immediately adjacent said extension.

6. In a panic lock device of the type including a latch bolt casing, a panic bar pivotally mounted to said casing and urged by gravity to move in a first pivotal direction, and bar support spring means yieldingly biasing said bar against movement in said first direction, a latch bolt mounted for reciprocal movement inwardly and outwardly of said latch bolt casing, latch bolt operator means operatively connected to said panic bar for retracting said bolt responsive to movement of said bar in said first pivotal direction, the improvement which comprises a shear pin mounted in said latch casing, spring means urging said shear pin in a first direction, low melting link means interposed between said shear pin and casing and normally blocking movement of said pin in said first direction, a shear pin receiver socket on said latch bolt positioned in registry with said pin in the outward position of said latch bolt, said spring means being effective to project portions of said pin into said socket responsive to melting of said link means.

7. The device of claim 6 wherein said shear pin includes an enlarged annular extension and a reduced diameter neck portion disposed immediately adjacent said extension, said extension being of greater diameter than said socket, whereby, when said portions of said pin are projected into said socket, said extension will abut said bolt adjacent said socket, thereby locating said neck portion substantially at the surface of said bolt.

* * * * *