(12) INTERNATIONAL APPLICATION PUBLISHED UNDER THE PATENT COOPERATION TREATY (PCT)

(19) World Intellectual Property Organization
International Bureau

(43) International Publication Date
19 June 2008 (19.06.2008)

PCT

(10) International Publication Number
WO 2008/073132 A2

(51) International Patent Classification:
E04F 11/00 (2006.01) *E04F 19/10* (2006.01)

(21) International Application Number:
PCT/US2007/003378

(22) International Filing Date: 8 February 2007 (08.02.2007)

(25) Filing Language: English

(26) Publication Language: English

(30) Priority Data:
11/635,231 7 December 2006 (07.12.2006) US

(71) Applicant *(for all designated States except US)*: **STAIR-RITE, LLC** [US/US]; P.O. Box 6207, Fullerton, California 92831 (US).

(72) Inventors; and
(75) Inventors/Applicants *(for US only)*: **BARRY, Michael A.** [US/US]; 34 Tea Garden, Irvine, California 92620 (US). **GOODWIN, George E.** [US/US]; 8508 E. Durango Way, Anaheim, California 92808 (US).

(74) Agent: **STETINA BRUNDA GARRED & BRUCKER**; 75 Enterprise, Suite 250, Aliso Viejo, California 92656 (US).

(81) Designated States *(unless otherwise indicated, for every kind of national protection available)*: AE, AG, AL, AM, AT, AU, AZ, BA, BB, BG, BR, BW, BY, BZ, CA, CH, CN, CO, CR, CU, CZ, DE, DK, DM, DZ, EC, EE, EG, ES, FI, GB, GD, GE, GH, GM, GT, HN, HR, HU, ID, IL, IN, IS, JP, KE, KG, KM, KN, KP, KR, KZ, LA, LC, LK, LR, LS, LT, LU, LV, LY, MA, MD, MG, MK, MN, MW, MX, MY, MZ, NA, NG, NI, NO, NZ, OM, PG, PH, PL, PT, RO, RS, RU, SC, SD, SE, SG, SK, SL, SM, SV, SY, TJ, TM, TN, TR, TT, TZ, UA, UG, US, UZ, VC, VN, ZA, ZM, ZW.

(84) Designated States *(unless otherwise indicated, for every kind of regional protection available)*: ARIPO (BW, GH, GM, KE, LS, MW, MZ, NA, SD, SL, SZ, TZ, UG, ZM, ZW), Eurasian (AM, AZ, BY, KG, KZ, MD, RU, TJ, TM), European (AT, BE, BG, CH, CY, CZ, DE, DK, EE, ES, FI, FR, GB, GR, HU, IE, IS, IT, LT, LU, LV, MC, NL, PL, PT, RO, SE, SI, SK, TR), OAPI (BF, BJ, CF, CG, CI, CM, GA, GN, GQ, GW, ML, MR, NE, SN, TD, TG).

Published:
— *without international search report and to be republished upon receipt of that report*

(54) **Title:** MODULAR STAIRCASE KIT

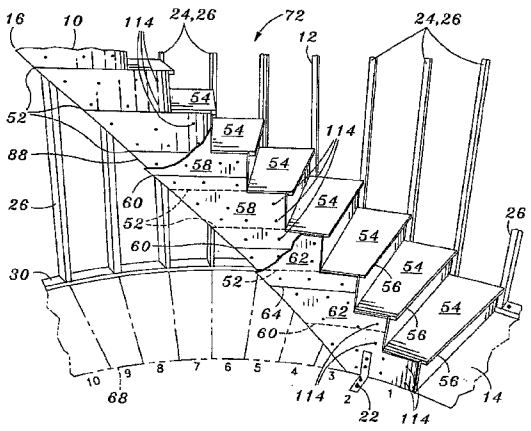

(57) **Abstract:** A staircase kit comprises a plurality of side panels and a plurality of inner and outer reinforcing panels disposed in layered arrangement over the side panels. The side panels and inner and outer reinforcing panels have preformed holes extending axially therethrough. The side panels are disposed in stacked relation to one another to form a plurality of module joints there between. Likewise, the inner reinforcing panels are disposable in overlapping relationship to the module joints. The inner reinforcing panels form a plurality of inner panel joints that are preferably disposed in staggered relationship to the module joints. The outer reinforcing panels are disposed in overlapping relationship to the inner panel joints to form a plurality of outer panel joints that are disposed in staggered relationship to the inner panel joints. The preformed holes of the side panels are axially alignable with the preformed holes of the inner and outer reinforcing panels such that mechanical fasteners may be installed at the job site in order to assemble the staircase kit for interconnection to a building structure.

WO 2008/073132 A2

MODULAR STAIRCASE KIT

CROSS-REFERENCE TO RELATED APPLICATIONS

This is a continuation-in-part application of pending U.S. Patent Application No. 11/189,580 entitled MODULAR CURVILINEAR STAIRCASE and filed on July 26, 2005, and is related to continuation-in-part U.S. Patent Application No. 11/273,206 also entitled MODULAR CURVILINEAR STAIRCASE filed on Nov. 14, 2005, the entire contents of both applications being expressly incorporated by reference herein.

STATEMENT RE: FEDERALLY SPONSORED RESEARCH/DEVELOPMENT

(Not Applicable)

BACKGROUND OF THE INVENTION

The present invention relates generally to building construction and, more particularly, to a uniquely configured modular staircase kit that is comprised of individual step modules that are pre-manufactured offsite using a specialized tooling fixture. The step modules are then assembled in stacked arrangement at a job site to form a staircase which may also be interconnected to a building structure such as a home.

In building construction and, more particularly, in home construction, the installation of a curved stairway adds to the aesthetic appeal of a home interior. Furthermore, homeowners and builders realize that a curved staircase is generally a good investment in that a curved staircase may increase the home's resale value compared to the relatively lesser value added by a simple, straight staircase. Unfortunately, prior art curved staircases are generally more expensive than straight staircases. Such increased expense is due in large part to the cost of forming the curved portions of the curved staircase. Furthermore, the installation of a curved staircase requires a higher degree of skill and is sometimes comparable to the high level of skill required in cabinet making.

The increased expense is also due in part to the time consuming manner in which such curved staircases are installed. For example, prior art methods of curved staircase construction include trial-and-error cutting and fitting of the staircase

framing as well as fitting of the individual components of the staircase. Prior art building methods are also typically performed entirely at the job site wherein the curved staircase is built into the structure.

In such methods, an outer wall is framed with studs and an inner wall is then framed with the stringers being attached to the studs of the inner wall. Risers are then cut and assembled into individual-steps to tie the outer wall to the inner wall in order to form the curved staircase steps. As may be appreciated, such conventional method for curved staircase construction is extremely time-consuming. Furthermore, such conventional building method is highly dependent upon skilled labor and the availability of specialized tooling in order to produce a staircase that meets precise tolerance requirements mandated by local and national building codes.

In an attempt to reduce the time and cost required to construct curved staircases, several manufacturers have developed pre-assembled completed curved staircases that are assembled at a factory and shipped as a unit to the job site. Such pre-assembled staircases are then installed by interconnecting the staircase at strategic points to the building structure. Unfortunately, due to the difficulty in controlling the tolerances of the building structure to which the completed staircase is to be connected, problems with fitment of the curved staircase may occur. In addition, generation of excess material wastage, schedule conflicts such as with framers, and issues in meeting building code requirements may develop.

Furthermore, the shipping of an entire completed curved staircase to a building structure many miles from the factory may entail significant logistical problems and may incur great expense. In addition, the cost of pre-manufacturing such a curved staircase may run into the many thousands of dollars even prior to final installation into a building structure. Finally, such prior art building construction of curved staircases may result in problems with the structural integrity of the curved staircase and, more particular, problems associated with the connection of the curved staircase to upper and lower levels of the building structure. A common problem that may develop with curved staircases of the prior art is that staircase squeakage may occur over time due to gradual loosening of joints in the staircase.

As can be seen, there exists a need in the art for a curved staircase that conforms to various building codes. Furthermore, there exists a need in the art for a curved staircase that can be pre-manufactured in modular form and shipped as a

staircase kit to a job site. Additionally, there exists a need in the art for a curved staircase that can be pre-manufactured to precise tolerances using specialized machinery in climate-controlled conditions of a pre-manufacturing facility. Also, there exists a need in the art for a curved staircase that can be initially designed to be compatible with the building structure using computer aided design techniques in order to avoid costly errors during final installation. Finally, there exists a need in the art for a curved staircase that is of low cost and that can be easily installed in a drastically reduced amount of time.

BRIEF SUMMARY

The present invention specifically addresses the above referenced needs associated with curved staircases. More specifically, the present invention is a uniquely configured staircase kit that may be prefabricated at an offsite location such as a factory. The staircase kit may be later assembled at a job site to form a staircase that may be attached to a building structure such as a house. The staircase kit may be configured to produce a straight staircase, a curved staircase, or any combination thereof. Advantageously, the staircase kit of the present invention may be accurately pre-manufactured offsite for later assembly at the job site using unskilled labor in order to reduce overall construction costs and assembly time.

In its broadest sense, the staircase kit comprises a plurality of side panels and at least one reinforcing panel disposed in layered arrangement to the side panels. The side panels and inner reinforcing panel have coaxially aligned preformed holes extending therethrough for receiving mechanical fasteners to interconnect the side panels with the inner reinforcing panel. Additionally, the staircase kit may further comprise outer reinforcing panels that are sized and configured to be layered against the inner reinforcing panels. The outer reinforcing panels preferably also have preformed holes that are coaxially alignable with the preformed holes formed in the side panels and inner reinforcing panels.

The side panels form a plurality of module joints therebetween. Likewise, the inner reinforcing panels form a plurality of inner panel joints. Finally, the outer reinforcing panels form a plurality of outer panel joints. Preferably, the inner panel joints are disposed in staggered relationship to the module joints. Likewise, the outer

panel joints are preferably disposed in overlapping relationship to the inner panel joints and are also preferably staggered in relation to the module joints.

The staircase kit may be fabricated by means of a tooling fixture having a plurality of angularly spaced outer posts to which the side panels and inner and outer reinforcing panels may be temporarily secured. The outer posts have a radius of curvature that is complimentary to the desired radius of curvature of the curved staircase as installed. The side panels are initially secured to the outer posts and are vertically stacked and angularly arranged in relation to one another. The securing of the side panels may be facilitated by means of temporary clamps. Next, a layer of inner reinforcing panels is disposed against the side panels in vertically stacked arrangement. Importantly, the inner reinforcing panels are positioned to stagger each of the module joints between the side panels. Next, the outer reinforcing panels are layered against the inner reinforcing panels and are positioned in order to straddle each of the inner panel joints formed between the inner reinforcing panels.

While the staircase kit is temporarily secured to the tooling fixture, preformed holes are installed through the side panels and inner and outer reinforcing panels such as by drilling at strategic locations according to a desired bolt pattern. Mechanical fasteners such as nut and bolt combinations may then be installed into the preformed holes in order to rigidly secure the side panels and inner and outer reinforcing panels together.

The tooling fixture may further include a cutting device such as a router for forming step cutouts into the side panels and inner and outer reinforcing panels while the side panels and inner and outer reinforcing panels are temporarily secured to the tooling fixture. The dimensions of the step cutouts are dictated by the overall staircase geometry and, more specifically, by the dimensions of the riser height and tread depth. The router blade may be guided along the outer posts to form the vertical portion of the step cutouts. The horizontal portion of the step cutouts may be formed by moving the router on a radial arm pivotably mounted on a central post located at the center of curvature of the outer posts.

While still secured to the tooling fixture, the router may also be used to cut the diagonal trim line on a back side of the staircase. The side panels and inner and outer reinforcing panels are then preferably labeled with a positional marking which corresponds to the relative position of the side panels and inner and outer reinforcing

panels on the tooling fixture The side panels and inner and outer reinforcing panels are then disassembled by removal of the mechanical fasteners (i.e., nut and bolt combinations) and removed from the tooling fixture.

The staircase kit may then be transported to a job site wherein the staircase kit may be reassembled in accordance with the positional markings. Mechanical fasteners such as nuts and bolts are then installed in the performed holes. Optionally, adhesive may be used in combination with the mechanical fasteners during re-assembly of the staircase kit to aid in securing the side panels with the inner and outer reinforcing panels. Adhesive such as suitable glue may enhance the load-carrying capabilities of the completed staircase.

The curved staircase may be interconnected to the building structure at upper and lower levels by means of strap members. The tooling fixture may be utilized to pre-fabricate staircase kits for different versions of curved staircases including: inside radius free-standing, outside radius free-standing or entirely free-standing versions.

BRIEF DESCRIPTION OF THE DRAWINGS

These as well as other features of the present invention will become more apparent upon reference to the drawings wherein:

Figure 1 is a perspective view of a curved staircase in an inside radius free-standing version thereof and which illustrates a plurality of step modules that may be assembled in stacked angular spaced configuration and which may be interconnected to wall studs of a building structure;

Figure 2 is a perspective view of one of the step modules in a single step version thereof and which may be utilized in an inside radius free-standing version of the curved staircase and illustrating the step module comprising a side panel, a front riser and a tread ledger extending laterally outwardly therefrom;

Figure 2a is a perspective view of the single step version of one of the step modules which may be utilized in an outside radius free-standing version of the curved staircase;

Figure 2b is a perspective view of one of the step modules in a single step version thereof which may be utilized in an entirely free-standing version of the curved staircase;

Figure 3a is a perspective view of the curved staircase in the inside radius free-standing version and which utilizes the single step version of the step module and which illustrates the stacking of the step modules to form a plurality of module joints therebetween;

Figure 3b is a perspective view of the curved staircase shown in Figure 3a and illustrating a front riser of the step module being interconnected to wall studs of the building structure;

Figure 4 is a perspective view of the curved staircase of Figure 3a and illustrating a strap member interconnecting the curved staircase to an upper level of the building structure;

Figure 5 is a perspective view of one of the step modules in a dual step version thereof and which may be utilized for the entirely free-standing version of the curved staircase and illustrating a spaced pair of the side panels having a pair of riser assemblies extending therebetween with each of the riser assemblies comprising a front riser disposed in abutting contact to a tread ledger;

Figure 6 is a perspective view of the curved staircase in the entirely free-standing version and which utilizes a plurality of the dual step versions of the step modules assembled in stacked, angularly spaced arrangement;

Figure 6a is a perspective view of the entirely fee standing version of the curved staircase extending up to a straight walkway;

Figure 7 is a perspective view of a tooling fixture as may be utilized for prefabricating a staircase kit of the present invention;

Figure 8 is perspective view of the side panels, inner reinforcing panels, and outer reinforcing panels disposed in layered arrangement relative to one another;

Figure 9 is an exploded perspective view of the side panels and inner and outer reinforcement panels illustrating the finished shapes of each of the panels;

Figure 10 is a perspective view of the tooling fixture illustrating a cutting device such as a router mounted on a central post;

Figure 11 is an elevational view of the tooling fixture illustrating the layer of side panels temporarily secured thereto and illustrating a bolt pattern of preformed holes installed in the side panel;

Figure 12 is an elevational view of the inner reinforcement panel temporarily secured to the outer posts of the tooling fixture; and

Figure 13 is an elevational view of the outer reinforcement panels temporarily secured to the outer posts and illustrating a diagonal trim line along which the side panels and inner and outer reinforcement panels may be trimmed.

DETAILED DESCRIPTION

Referring now to the drawings wherein the showings are for purposes of illustrating the present invention and not for purposes of limiting the same, shown in Figures 1-6a is a staircase 10 which is constructed of pre-manufactured step modules 36 and which may be configured to form a straight or a curved staircase 10 or any combination thereof. However, for purposes of this discussion, the staircase will be described with reference to a curved staircase 10. Shown in figures 7-13 is a tooling fixture 92 for pre-manufacturing a staircase kit such as may be pre-fabricated on the tooling fixture 92 and disassembled for later installation at a job site to form the curved staircase 10.

As can be seen in Figures 1 and 6, the step modules 36 may be assembled in stacked arrangement on top of one another. The staircase 10 may be provided in an "entirely free-standing" 74 version wherein the curved staircase 10 is not connected to the building structure 12. In this regard, the entirely free-standing version 74 of the staircase 10 bears its own weight and provides its own stability without any structural support from the walls of the building structure 12.

The curved staircase 10 of the present invention may also be configured as an "inside radius free-standing" version 72 wherein an inside radius thereof is self-supported (i.e., is unsupported by a wall) while an outside radius of the curved staircase 10 is interconnected to the building structure 12 (i.e., is supported by a wall). Additionally, the curved staircase 10 of the present invention may also be configured as an "outside radius free-standing" version (not shown) wherein only an outer radius thereof is free-standing while the inner radius of the curved staircase is interconnected to the building structure 12.

Although the disclosure herein relates to an "outside radius free-standing" version, an "inside radius free-stranding" version 72, and an "entirely free-standing" version 74, it is contemplated that the curved staircase 10 may be adapted for use as a fully supported staircase wherein weight-bearing walls support both sides (i.e., inner and outer radii) of the curved staircase 10. Such weight bearing walls may be used to

enclose a closet, a half-bath or a basement stairwell which may be disposed beneath the curved staircase 10.

As was earlier mentioned, the curved staircase 10 of the present invention is fabricated of pre-formed or pre-manufactured step modules 36 which may be fabricated using unskilled labor with precision tooling and machinery in a climate-controlled facility. Under such controlled conditions, the resulting step modules 36 may be produced with tight manufacturing tolerances. Advantageously, the individual step modules 36 may be shipped to the job site at a reduced cost as compared to the cost of shipping an entire staircase 10 to a job site. In addition, the step modules 36 may be assembled in a fraction of the time that is required to build a conventional curved staircase 10 into a building structure 12 at a job site.

In its broadest sense, the curved staircase 10 comprises a plurality of step modules 36, a plurality of treads 54 mounted upon the step modules 36, and a plurality of inner and outer reinforcing panels 58, 62 which are disposed in overlapping relationship to one another for interconnection of the step modules 36. As can be seen by reference to the figures, the curved staircase 10 may extend between upper and lower levels 16, 14 of the building structure 12. The building structure 12 may include framing 24 comprised of a plurality of spaced, vertically oriented wall studs 26 that extend at least between the upper and lower levels 16, 14 of the building structure 12. Additionally, blocking 28 may be locally attached to certain areas of the wall studs 26 to facilitate attachment of the front risers 46 for the inside radius free-standing version 72 of the curved staircase 10.

For the inside radius free-standing version 72, the step module 76 may be constructed similar to that shown in Fig. 2 wherein the front riser 46 is specifically adapted to be interconnected to the vertical wall studs 26, either directly or indirectly, so as to provide a load bearing path for an outer radius side of the curved staircase 10. For such versions, the inner radius side is generally free-standing and is supported only at the upper and lower levels 16, 14 of the building structure 12. For the outside radius free-standing version of the curved staircase 10, the step module 76 may be constructed similar to that shown in Fig. 2a wherein the outer radius side of the curved staircase 10 is generally free-standing and is supported only at the upper and lower levels 16, 14.

As will be described in greater detail below, inner and outer reinforcing panels 58, 62 that are layered over the stacked step modules 36 provide structural rigidity and strength to the assembly such that the free-standing side of the curved staircase 72 can support its own weight as well as the weight of persons or objects that are placed on the curved staircase 10. An additional embodiment of the step module 76 may be constructed similar to that which is shown in Fig. 2b for the entirely free-standing version 74 of the curved staircase 10 which will be described in greater detail below.

Although the step modules 36 may be preassembled and pre-manufactured using specialized tooling, the inner and outer reinforcing panels 58, 62 may likewise be pre-manufactured using similar specialized tooling. The treads 54 may also be manufactured as individual components away from the job site under controlled conditions in order to produce a precisely dimensioned component of the curved staircase 10. The step modules 36, treads 54 and inner and outer reinforcing panels 58, 62 and other components may be pre-manufactured and shipped directly from the factory to the job site for assembly.

Referring now to Figures 1 and 3b, for the inside radius free-standing 72 version, shown is the building structure 12 with the curved staircase 10 installed therein. The building structure 12 may have a framing 24 system comprised of the vertical wall studs 26. As can be seen, the front risers 46 are connected to the vertical wall studs 26. It is contemplated that the vertical wall studs 26 are preferably spaced and oriented to be compatible with the joining of the front risers 46 thereto. However, it is further contemplated that additional blocking 28 may be installed such as to allow for attaching of the front risers 46 should the wall studs 26 be misaligned with the front risers 46.

Each one of the wall studs 26 preferably extends between the upper and lower level 16, 14 although the wall studs 26 may be erected in any orientation or location within the framing 24. The wall studs 26 may extend from the upper level 16 down to the lower level 14 and may be interconnected to the lower level 14 at a bottom plate 30 which may be mounted on the lower level 14 (e.g., floor). The bottom plate 30 may be shaped complementary to the curved staircase 10. More particularly, it is contemplated that the bottom plate 30 and, hence, the wall studs 26, may be oriented in a curved shape.

The inner radius of the curved staircase 10 may be either concentric or non-concentric with the outer radius of the curved staircase 10. For the concentric version of the curved staircase 10, it is contemplated that the center of curvature of the wall studs 26 collectively forms a radius that is coaxial with the center of curvature of the inner radius of the curved staircase 10. For the non-concentric version of the curved staircase 10, it is contemplated that the center of curvature of the outer radius is offset from the center of curvature for the inner radius. The wall studs 26 are preferably disposed at a spacing to coincide with the angular spacing of the stacked set of step modules 36.

As shown in Fig. 4, the upper level 16 of the building structure 12 may be fabricated of a series of horizontally-aligned floor joists 20. The floor joists 20 form a joist system 18 to which the curved staircase 10 leads. In this regard, the floor joists 20 may define a walkway 32 structure that may connect to the curved staircase 10. The joist system 18 preferably includes at least one load-bearing beam 70 to which the curved staircase 10 attaches and by which it is supported at the upper level 16. At least one of the front riser 46 and tread ledger 48 and the step module 36 may be abutted against the beam 70 and may be connected thereto with mechanical fasteners such as nails or screws. The side panel 38 may also be connected to the beam 70 as shown in Fig. 4.

For configurations where the upper level 16 of the building structure 12 is curved, the inner and outer reinforcing panels 58, 62 of the uppermost one of the step modules 36 may extend around the walkway 32 and may be connected to the joist system 18, as can be seen in Fig. 4. The walkway 32 may also include a facia sheet 34 mounted to a side thereof and which has a curved shape that is complementary to the curved shaped of the curved staircase 10. The walkway 32 may also be generally straight with the curved staircase 10 blending thereinto in a manner similar to that shown in Fig. 6a.

Shown in Figure 2 is the single-step version 76 of the step module 36 which is prefabricated. Each one of the single-step versions 76 of the step modules 36 is comprised of a side panel 38, a front riser 46 and a tread ledger 48 which extends outwardly from the side panel 38. The side panel 38 is also prefabricated and comprised of laminated members 40 and may be formed according to the disclosure in U.S. Patent No. 4,955,168 issued to Barry, the entire contents of which is expressly

incorporated by reference herein. The side panel 38 may be generally arcuately shaped (i.e., curved) with a radius of curvature and therefore has an outer convex surface 42 and an inner concave surface 44.

To achieve the particular radius of curvature, it is contemplated that the side panel 38 is formed of a plurality of members 40 that are layered over one another. As shown in the figures, the side panel 38 of the step module 36 may be comprised of six laminated members 40 that may be formed of bonded particulate material. The material from which the side panel 38 may be fabricated may be cellulose fiber, shredded paper, wooden particles, sawdust, and various combinations thereof.

The particulate material is bonded together via a matrix resin to form the laminate material. The individual ones of the laminated members 40 may consist of individual thin wooden members made of the particulate material and which are formed around a curved jig. The laminated members 40 may be bonded together in juxtaposition to one another so as to result in a unitary laminated structure 12 having a predetermined size and thickness. Under sufficient temperature, pressure and other conditions, the desired arcuate or circular shape may be formed into the laminated members 40 to result in the side panel 38. As described in U.S. Patent No. 4,955,168, a mold may be used to form the side panel 38 in the desired radius of curvature. In this regard, the side panels 38 may be formed in any radius and at any length other than that shown in the figures and in any suitable manner including the process and materials disclosed in U.S. Patent No. 4,955,168.

As shown in Figs. 1-4, the side panels 38 of each one of the step modules 36 may include the laminated members 40 being formed of material that is ¼ inch thick in order to arrive at a total thickness of the side panel 38 of 1-½ inches. However, any number of laminated members 40 of any thickness may be layered together. The side panel 38 thus forms a partial arch section that has an arc length sufficient for constructing the inner radius of the curved staircase 10.

Each one of the side panels 38 is preferably constructed at a riser height 50 which is preferably the height between each one of the vertical levels of the step modules 36. Local and/or national building codes generally prescribe the riser height 50. Extending from the outer convex surface 42 of the side panel 38 are the front riser 46 and tread ledger 48. As can be seen, the front riser 46 and tread ledger 48 are disposed in overlapping and abutting relationship to one another and are generally

positioned on the outer convex surface 42 at an arc length that is compatible with a tread 54 depth. Similar to the riser height 50, the tread 54 depth may also be controlled by local and/or national building codes.

As can be seen by reference to Figs. 1-4, the tread ledger 48 forms the aft mounting surface for the tread 54 while the front riser 46 forms the forward mounting surface for the tread 54 for the step module 36 immediately above. Therefore, the tread ledger 48 is formed at a riser height 50 that is generally equivalent to that of the side panel 38. More specifically, the side panel 38 and the tread ledger 48 may each have upper edges that are generally flush with one another such that the tread 54 may be supported by the tread ledger 48 upper edge, the front riser 46 upper edge and the side panel 38 upper edge. The tread ledger 48 generally abuts the outer surface convex of the side panel 38 and extends laterally therefrom.

The front riser 46 of each one of the step modules 36 may also have an upper edge which extends upwardly past the upper edges of the side panel 38 and tread ledger 48 to a level that is equal to that of the riser height 50. In this manner, the front riser 46 of each one of the step modules 36 determines the height of each one of the steps of the curved staircase 10. Therefore, the total height of each one of the front risers 46 is twice that of the side panels 38. More specifically, the side panel 38 and tread ledger 48 are preferably formed at a riser height 50 while the front riser 46 is formed at twice the riser height 50.

As can be seen by reference to Figs. 1-4, the front riser 46 may include an inset portion wherein the upper portion of the front riser 46 extends over the upper edge of the side panel 38 and is generally flush with the inner concave surface 44 of the side panel 38. However, it is contemplated that the front riser 46 need not necessarily be flush with the side panel 38 but may be shaped in a variety of configurations. In order to facilitate the attachment of inner and outer reinforcement panels 58, 62 to the curved staircase 10, it is preferable that the end of the front riser 46 is generally flush with the inner concave surface 44 of the side panel 38.

The front riser 46 may be attached to the outer convex surface 42 of the side panel 38 and may have a lower portion that abuts the outer convex surface 42 in a manner similar to that described above for the attachment of the tread ledger 48 to the outer convex surface 42. It is contemplated that the front riser 46 and tread ledger 48 may be attached to the outer convex surface 42 of the side panel 38 by means of

glues, adhesives and/or mechanical fasteners such as nails and/or screws. As was earlier mentioned, the front riser 46 and tread ledger 48 are preferably pre-assembled under controlled conditions at the factory and are then shipped to the job site. Materials from which the front riser 46 and tread ledger 48 may be fabricated include any suitable material such as wood and, more particularly, plywood and Versa-Lam which is commercially available from the Boise Cascade Corporation.

After the step modules 36 have been shipped to the job site, installation thereof is initiated by first connecting the front riser 46 and tread ledger 48 to one of the vertical wall studs 26 as shown in the figures. More specifically, the front riser 46 extends laterally from the side panel 38 and is connected to one of the wall studs 26 on the side thereof. The tread ledger 48 also extends laterally from the side panel 38 and is connectable to a front face of the wall stud 26. In certain framing 24 arrangements in the building structure 12 wherein an appropriate vertical wall stud 26 is not readily available adjacent to (i.e., is not aligned with) the front riser 46 and tread ledger 48, blocking 28 may be installed into the framing 24 wherein horizontal and/or vertical segments of wooden studs or other material may be framed in between the existing wall studs 26 to create an appropriate attach point that is aligned with the front riser 46 and tread ledger 48.

Each one of the step modules 36 is preferably disposed in stacked relationship to one another. In order to create steps for the curved staircase 10, the step modules 36 are disposed in angular spaced orientation with respect to one another. In this regard, the angular spacing and arcuate arrangement of the wall studs 26 is preferably compatible to that of the step modules 36 wherein the angular orientation and spacing between adjacent ones of the step modules 36 matches the angular spacing between the wall studs 26. A module joint 52 is formed between adjacent ones of the step modules 36.

The curved staircase 10 of the present invention further includes the plurality of treads 54 which are mounted on upper edges of the tread ledger 48 and side panel 38 of respective ones of the step modules 36 and the upper edge of the front riser 46 of the next lower (i.e., immediately adjacent) step module 36. The treads 54 may be tapered with the amount of taper in each one of the treads 54 being formed in relation to the angular orientation of adjacent ones of the front riser 46 and tread ledger 48 which extend from adjacent ones of the step modules 36. The width of the tread 54 is

preferably measured from an inside concave surface of the outer reinforcing panels 62 to the wall studs 26. As can be seen in the figures, the step modules 36 are angularly spaced or oriented to create a suitable amount of tread 54.

Each one of the treads 54 is preferably mounted so as to be abutted up against the front riser 46 of the step module 36 upon which the tread 54 is mounted. Furthermore, the front riser 46 of the next lower adjacent step module 36 serves as the mounting surface for a forward portion of the tread 54. In order to provide the required nosing 56 that is typical of stair steps, the tread 54 may have an additional material portion (i.e., nosing 56) that extends slightly over each one of the front risers 46. However, it is contemplated that the nosing 56 may be altogether omitted. Alternatively, the nosing 56 may be extended over each one of the front risers 46 in any amount and may be provided with beveling along the edges thereof.

Regarding specific materials for the front riser 46 and tread ledger 48, any wooden or non-wooden material may be used. However, Versa-Lam and/or manufacturing grade plywood is preferred for the front riser 46 and tread ledger 48 due to its resistance to ill effects from moisture. In addition, manufacturing grade plywood is preferred over construction grade plywood and manufacturing grade plywood may retain its tolerances regardless of the amount of moisture absorbed thereinto. Resistance to moisture also insures a better fit of the curved staircase 10 when assembled into the building structure 12. Regarding materials from which the treads 54 may be fabricated, it is contemplated that any suitably hard and durable wooden or non-wooden material may be utilized. Examples of such materials include, but are not limited to, manufacturing grade plywood and/or any hard wood such as oak, mahogany, cherry, and birch.

It is contemplated that individual components including the treads 54 and the front riser 46 and tread ledger 48 may be fabricated using specialized tooling and or machinery and may further include the use of computer aided design (CAD) equipment which may be operatively coupled to such machinery in order to produce parts with a high degree of precision. As was earlier mentioned, such improved precision in dimensional tolerances of the individual components improves the degree to which the curved staircase 10 may be fitted to the building structure 12 in conformance with building codes.

Referring still to the figures, following the stacking and angular spacing of the individual ones of the step modules 36 from the upper level 16 down to the lower level 14 of the building structure 12, a plurality of the inner reinforcing panels 58 is then disposed in overlapping relationship to the inner concave surfaces 44 of the side panels 38 of adjacent ones of the step modules 36. Each one of the inner reinforcing panels 58 overlaps at least one of the module joints 52 to allow for interconnection of the step modules 36.

As shown in the figures, each one of the inner reinforcing panels 58 has generally horizontally disposed edges which abut against one another. A preferable configuration for each one of the inner reinforcing panels 58 is that they are sized to have a height that spans across at least one of the module joints 52. Furthermore, the inner reinforcing panels 58 may abut one another to form a plurality of inner panel joints 60 which are likewise formed in a horizontal orientation and are preferably disposed in staggered relationship to the module joints 52. The inner reinforcing panels 58 provide an additional structural load-carrying member which transfers loads across adjacent ones of the step modules 36. More specifically, each one of the inner reinforcing panels 58 carries loads across at least one of the module joints 52.

A plurality of the outer reinforcing panels 62 are also disposed in overlapping relationship to the inner reinforcing panels 58 and preferably span one of the inner panel joints 60. More specifically, the outer reinforcing panels 62 provide a structural load-carrying mechanism by which loads are distributed across the inner panel joints 60. Similar to that described above for the inner reinforcing panels 58, the outer reinforcing panels 62 may also abut one another to form a plurality of outer panel joints 64 which are preferably disposed in staggered relationship to the inner panel joints 60 and module joints 52. As shown in the figures, each one of the outer reinforcing panels 62 straddles one of the inner panel joints 60.

Both of the reinforcing panels 58, 62 may be fabricated using the same method discussed above for fabricating the side panels 38 as disclosed in U.S. Patent No. 4,955,168. Preferably, the inner reinforcing panels 58 have an outer convex surface 42 that is prefabricated to match an inner concave surface 44 of the side panels 38. Likewise, the outer reinforcing panels 62 have an outer convex surface 42 that is prefabricated to match the inner concave surface 44 of the inner reinforcing panels 58.

Furthermore, the outer reinforcing panels 62 have an inner concave surface 44 to which a finished material such as drywall, finished wood or other coverings may be applied. The above-described configuration (i.e., shape, material, attachment arrangement) for the side panels 38 and inner and outer reinforcing panels 58, 62 is applicable for all configurations of the step modules 36 (i.e., the single-step version 76 as well as the dual-step version 78) and also is applicable to all configurations of the curved staircase 10 (i.e., the outside radius free-standing version, the inside radius free-standing 72 version as well as the entirely free-standing version 74).

An additional structural element may be installed at strategic locations on the curved staircase 10 in order to tie the curved staircase 10 into the building structure 12. More specifically, a strap member 22 may be applied to connect the curved staircase 10 to the upper level 16. As was earlier mentioned, the upper level 16 may include the joist system 18 comprising a plurality of horizontal floor joists 20. The strap member 22 may connect an uppermost one of the step modules 36 to the beam 70 which may be generally of larger size than the floor joists 20 of the joist system 18.

As shown in the figures, the strap member 22 is attached to the outer reinforcing panel 62 adjacent to the uppermost one of the step modules 36. The strap member 22 may be horizontally oriented as it attaches to the outer reinforcing panel 62 and then wraps around a lower edge of the side panel 38 and extends upwardly along the outer concave surface of the side panel 38 and interconnects to the beam 70 located at the upper level 16 of the building structure 12.

The strap member 22 is preferably fabricated of metallic material but may be formed of any material including non-metallic material. The strap member 22 may include a row of apertures or holes through which mechanical fasteners such as nails or drywall screws may be extended into the outer reinforcing panel 62, inner reinforcing panel 58 and ultimately into the side panel 38. At the beam 70, mechanical fasteners such as screws and/or nails may likewise be driven through the apertures and into the beam 70 to firmly attach the curved staircase 10 to the upper level 16 of the building structure 12.

Likewise, at the lower level 14, the strap member 22 may be further provided for anchoring the curved staircase 10 to the building structure 12. In a similar manner to that described above for the upper level 16, the strap member 22 may be attached to a lowermost one of the step modules 36 immediately adjacent to the lower level 14

and may extend laterally along the lower level 14. The strap member 22 may likewise be a metallic member with a row of perforations or holes formed therealong through which mechanical fasteners may be extended.

Nails or screws may be driven through the outer reinforcing panel 62, inner reinforcing panel 58 and into the side panel 38 of the step module 36. As can be seen, the strap member 22 may be generally vertically oriented where it attaches to the lowermost one of the step modules 36 and may then bend at a ninety degree angle and extend laterally along the lower level 14 or it may be attached thereto by use of mechanical fasteners such as screws or nails. It should be noted that the strap member 22 may be arranged to connect the lower level 14 to the curved staircase 10 in any manner.

Regarding materials from which the inner and outer reinforcing panels 58, 62 may be fabricated, it is contemplated that particle board may be utilized. The material may be pre-cut to a desired width and/or length that is complementary to the particular riser height 50 utilized in the curved staircase 10. Individual ones of the inner and outer reinforcing panels 58, 62 may be disposed in abutting edge-to-edge contact with one another when overlaid upon the side panels 38. The inner and outer reinforcing panels 58, 62 may have a length that is intentionally longer than that which is required for the finalized version of the curved staircase 10.

In this manner, following completion of installation of the curved staircase 10, the extra length of the inner and outer reinforcing panels 58, 62 may be trimmed or cut off at an angle that matches the rake or angle of the curved staircase 10 as it extends from the lower level 14 to the upper level 16. For example, as shown in Fig. 5, the inner and outer reinforcing panels 58, 62 may be trimmed off along the trim line (shown in dashed lines in Fig. 5) after assembly of the step modules 36.

Referring to Fig. 1, during construction of the curved staircase 10 and prior to pre-manufacturing of the individual-step modules 36, it is contemplated that markings regarding the curvature of the side panels 38 as well as the curvature or radius of the vertical wall studs 26 may be directly applied to the lower level 14 as a template by which the curved staircase 10 may be measured and installed. More specifically, the desired locations of each one of the step modules 36 may be applied as a radially extending line denoting the front edge of each one of the treads 54. In this manner, measurements of the radius of curvature 66 and tread 54 width may be recorded and

used to pre-manufacture the individual components that make up the curved staircase 10 and individual ones of the step modules 36.

Furthermore, such radial markings allow for alignment and positioning of individual ones of the vertical wall studs 26 such that the wall studs 26 are generally in alignment with the front riser 46 and tread ledger 48 during installation of the curved staircase 10. As shown in Figs. 1 and 6, markings of the radii of curvature 66 of the inner concave surfaces 44 of the side panel 38, the radii of curvature 67 of the inner reinforcing panels 58, and the radii of curvature 68 of the outer reinforcing panels 62 may be directly applied to the lower level 14 in order to provide a template or guide by which the curved staircase 10 may be installed.

In accordance with the markings of construction lines and arcs for the curved staircase 10, the side panels 38 may be pre-manufactured off-site at a factory wherein individual laminated members 40 are joined to one another using the above-described manufacturing process disclosed in U.S. Patent No. 4,955,168. Likewise, individual ones of the front riser 46 and tread ledger 48 as well as the treads 54 may be further fabricated out of appropriate materials as was earlier discussed in accordance with radii of curvature 66, 67, 68 and angular spacings of the individual ones of the step modules 36.

Following fabrication of the individual components, the front riser 46 and tread ledger 48 may be joined to one another in abutting contact with ends thereof being abutted up against the outer convex surface 42 of the side panel 38. Furthermore, the tread ledger 48 and side panel 38 upper edges are preferably disposed to be generally flush with one another with the upper edge of the front riser 46 being extended upwardly above the side panel 38 at an amount generally equal to twice the riser height 50. The front riser 46 and tread ledger 48 are then glued and/or screwed or nailed together and then may be nailed to the side panel 38. The front riser 46 and tread ledger 48 are preferably fabricated with a length that is sufficient to be complementary to the tread 54 width.

Once the individual step modules 36 are formed, the same are then installed at the building structure 12 in accordance with the markings wherein the individual-step modules 36 are stacked in one-at-a-time fashion with the front riser 46 and tread ledger 48 being connected via mechanical fasteners and/or adhesive to the adjacent one of the wall studs 26. Once at least two of the step modules 36 have been stacked,

the inner reinforcing panels 58 may be successively applied in a manner wherein the inner reinforcing panel 58 straddles at least one of the module joints 52. Following application of the inner reinforcing panels 58 from the lower level 14 to the upper level 16, the outer layer of reinforcing panels is then applied wherein at least one of the inner panel joints 60 are covered and straddled by a respective one of the outer reinforcing panels 62.

The extra length of the inner and outer reinforcing panels 58, 62 may then be trimmed off on either side of the inner reinforcing panels 58 (i.e. along a front edge of the panels near the nosing 56 and along a rear edge of the panels). The strap members 22 are applied using adhesives and/or mechanical fasteners or other suitable means to interconnect the curved staircase 10 to the upper level 16 and to the lower level 14 in the manner described above. Following the basic construction of the curved staircase 10, additional operations may be completed to finish off the curved staircase 10 and/or building structure 12. More specifically, balusters and railings may be applied on the inside radius of the curved staircase 10.

Drywall, finished wood or other materials may be applied to the vertical wall studs 26 and other portions of the curved staircase 10. Likewise, drywall, finished wood or other materials may be applied underneath the curved staircase 10 as well as along the outer reinforcing panels 62. By constructing the step modules 36 and inner and outer reinforcing panels 58, 62 off-site in individual fashion using precision manufacturing techniques, a structurally strong and cost-effective curved staircase 10 may be installed in the building structure 12 using unskilled labor with minimal juggling of schedules with framers and/or other finishers.

Referring now to Figure 6, shown is the curved staircase 10 in the entirely free-standing version 74 which extends from the lower 14 to the upper 16 level of the structure 12 without any intermediate supports such that the curved staircase 10 bears its own weight without the structural support of a wall on either the inner or outer radius of the curved staircase 10. The curved staircase 10 may be constructed using the step modules 36 in the single-step version 76 and/or the dual-step version 78. For the curved staircase 10 constructed using the single-step version 76 of the step modules 36, each of the step modules 36 includes a spaced pair of side panels 38 and a front riser and tread ledger 46, 48 that extends between the side panels 38 and interconnects the side panels 38.

As was earlier mentioned, such side panels 38 are preferably formed using the methodology described in U.S. Patent No. 4,955,168. The step modules 36 are disposed in stacked, angularly spaced relationship to one another and define a plurality of module joints 52 when stacked. A plurality of treads are mounted on the side panels 38 and on the tread ledger 48 of a respective one of the step modules 36 as well as on the front riser 46 of the immediately lower adjacent one of the step modules 36. As can be seen in Figure 6, each one of the treads 54 spans the distance between the side panels 38 and preferably extends from the inner concave surface 44 of the outer reinforcing panel 62 on each side of the curved staircase 10.

The inner reinforcing panels 58 are applied over the side panels in the same manner as was earlier described above wherein the inner reinforcing panels 58 are disposed in overlapping relationship to the side panels 38 of adjacent ones of the step modules 36 for interconnecting the step modules 36. The inner reinforcing panels 58 are generally horizontally oriented and have edges that are disposed preferably in abutting relationship to one another such that adjacent ones of the inner reinforcing panels 58 form a plurality of inner panel joints 60 that are disposed in preferably staggered relationship to the module joints 52.

Likewise, the outer reinforcing panels 62 are disposed in overlapping relationship to the inner reinforcing panels 58 for interconnecting adjacent ones thereof. The outer reinforcing panels 62 form a plurality of outer panel joints 64 that are disposed in staggered relationship to the inner panel joints 60. The inner and outer reinforcing panels 58, 62 are, like the side panels 38, formed using the methodology as disclosed in U.S. Patent No. 4,955,168. In this regard, the side panels 38, inner reinforcing panels 58 and outer reinforcing panels 62 are prefabricated from a plurality of laminated members.

Each one of the side panels 38 may be arcuately shaped and has the outer convex surface 42 and inner convex surface 44 each defining a radius of curvature. The side panels 38 of each one of the step modules 36 may have non-concentric radii curvature wherein their radii of curvature are offset from one another. The side panels 38 and tread ledger 48 of each one of the step modules 36 are preferably formed at the riser height 50 similar to that which was described earlier for the step module 36 used in the inside radius free-standing version 72 of the curved staircase 10 which utilized the single-step version 76 step module. The front riser 46 has an upper

edge that extends upwardly past the side panel 38 upper edge to a level equal to that of the riser height 50.

The curved staircase 10 may also be fabricated using step modules 78 of the dual-step version 78. In this regard, construction of the individual components and assembly of the curved staircase 10 into the building structure 12 is facilitated in much the same manner as was earlier described for the step modules 36 of the single-step version 76. More specifically, the curved staircase 10 which utilizes the dual-step version 78 comprises a plurality of step modules 36 each including a spaced pair of side panels 38 wherein each one of the side panels 38 has a main portion 82 with a front extension 80 protruding outwardly therefrom.

As shown in Figure 5, the main portion 82 is constructed at a height which is twice that of the height of the front extension 80. The front extension 80 is preferably formed at the riser height 50 while the main portion 82 is preferably formed at twice the riser height 50. The step modules 36 of the dual-step version 78 also include a pair of riser assemblies extending between and interconnecting the spaced pair of side panels 38. Each of the riser assemblies may comprise a forward and an aft riser assembly 84, 86 which are disposed in spaced, staggered relationship to one another and which extend between the side panels 38.

Each of the individual ones of the riser assemblies comprise a front riser 46 and a tread ledger 48 which are preferably abutted up against one another. The front riser 46 extends upwardly past the tread ledger 48. The tread ledger 48 of the forward riser assembly 84 has an upper edge that is generally flush with the front extension 80 upper edge. The front riser 46 of the forward riser assembly 84 has an upper edge that is generally flush with the main portion 82 upper edge. The tread ledger 48 of the aft riser assembly 86 has an upper edge that is generally flush with the main portion 82 upper edge while the front riser 46 of the aft riser assembly 86 also has an upper edge that extends upwardly past the main portion 82 upper edge to a level equal to that of the riser height 50.

The step modules 36 are disposed in stacked, angularly spaced relationship to one another and define a plurality of module joints 52 therebetween. Treads 54 are provided with the step modules 36 with each one of the treads 54 being supported by the side panels 38 and by a pair of the front risers 46 and tread ledgers 48 that are immediately adjacent to one another. Inner and outer reinforcing panels 58, 62 are

provided on both sides of the curved staircase 10 in a manner similar to that which was earlier described. The inner and outer reinforcing panels 58, 62 are constructed similar to the construction of the side panels 38 in that such components are prefabricated using a plurality of laminated members 40 that are formed at a predetermined radius of curvature 67, 68. It should be noted that the side panels 38 of each one of the step modules 36 may have non concentric radii of curvature although concentric radii of curvature is also contemplated.

The curved staircase 10 of the entirely free-standing version 74 which utilizes either the step module 36 of the single-step version 76 or the dual-step version 78 may be connected to the upper level 16 by means of the strap member 22. The application and configuration of the strap member 22 is similar to that which was earlier described wherein a strap member 22 may be attached to an upper most one of the step modules 36 and is connected to at least one beam 70 of a joist system 18.

Likewise, at least one strap member 22 may be provided on at least one and preferably both sides of the entirely free-standing version 74 of the curved staircase 10 at the lower level 14 of the building structure 12. The materials, configuration, and construction methodology for the entirely free-standing version 74 of the curved staircase 10 is similar to that which was earlier disclosed for the inside radius free-standing version 72 of the curved staircase 10. For example, the front riser 46 and tread ledger 48 of the curved staircase 10 of the entirely free-standing version 74 may include plywood and/or Versa-Lam material while the tread 54 may be fabricated of plywood.

Referring back to Figure 1, the curved staircase 10 may be constructed as either the outside radius free-standing version or as the inside radius free-standing version 72 using the step module 36 in the dual-step version 78. For such a configuration, the curved staircase 10 extends between upper and lower levels 16, 14 of the building structure 12 which has a plurality of the spaced vertical wall studs 26. The curved staircase 10 comprises the step modules 36 which each include the side panel 38 having the main portion 82 with the front extension 80 protruding outwardly therefrom. The pair of riser assemblies extend laterally outwardly from the side panels 38 and are connectable to the wall studs 26 of the building structure 12.

As was further mentioned, each of the riser assemblies comprises the forward and aft riser assembly 84, 86 which are disposed in staggered relationship to one

another. As can be seen in Figure 5, the dual-step version 78 of the step module 36 has an aft riser assembly 86 that is disposed at a higher level than that of the forward riser assembly 84. Each riser assembly comprises a tread ledger 48 and a front riser 46 which extends upwardly past the tread ledger 48. The treads 54 of the curved staircase 10 are applied in the same manner as was described above for the inside radius free-standing version 72 of the curved staircase 10 that utilizes the single-step version 76 of the step modules 36.

Likewise, the configuration including the material, shape and interconnection of the components of the curved staircase 10 is similar to that described above. For example, the side panels 38, inner reinforcing panels 58 and outer reinforcing panels 62 are preferably prefabricated of a plurality of laminated member 40. Likewise, the side panels 38 are preferably arcuately shaped as are the inner and outer reinforcing panels 58, 62. The relative heights of the front extension 80, main portion 82, front riser 46 and tread ledger 48 is also similar to that which was described earlier for the entirely free-standing version 74 of the curved staircase 10 utilizing the dual-step version 78 of the step modules 36.

Referring now to Figures 7-13, shown is a tooling fixture 92 for pre-manufacturing a modular staircase kit which may be disassembled, shipped to a job site and later re-assembled and connected to a building structure 12 to form any of the above-described versions of the curved staircase 12. In its broadest sense, the tooling fixture 92 comprises a plurality of angularly spaced outer posts 96. As can be seen in Fig. 7, the tooling fixture 92 may optionally include a tooling base 98. The outer posts 96 may be affixed to the tooling base 98 or the outer posts 96 may be permanently installed such as by fixing to the flooring of an assembly facility. The tooling base 98 may be a planar member and may be fabricated of a relatively stiff sheet of material such as plywood.

The tooling fixture 92 may further include a lower tooling frame 100 mounted on the tooling base 98 and to which the outer posts 96 may be secured at a predefined angular spacing relative to one another. The tooling frame 100 may itself be formed in an arch shape from a plurality of laminated members 40 which may be pre-manufactured in a manner similar to that described above for the side panels 38. In this regard, the tooling frame 100 may be formed with a radius of curvature 66 that is

complementary to the desired curvature of the side panels 38 which form a part of the staircase kit.

Figs. 8-13 illustrate the fabrication of the staircase kit in an "inside radius free-standing version" 72. For "entirely free-standing versions" 74 of the curved staircase 10, tooling frames 100 having differing radii of curvature 66 may be required to form the staircase kits for the opposing sides of the staircase. As shown in Figure 7, the tooling fixture 92 includes the lower tooling frame 100 from which the outer posts 96 extend upwardly toward an upper tooling frame 100. The upper tooling frame 100 itself may be secured to a suitably rigid support 12 such as a roof structure of a building. In addition, the tooling fixture 92 may include any number of additional tooling frames 100 and/or braces that may be located intermediate of the upper and lower tooling frames 100 in order to provide the required stiffness and rigidity to the tooling fixture 92 and to help maintain the angular spacing of the outer posts 96.

Optionally, the outer posts 96 may be provided with a plurality of equidistantly-spaced holes which may facilitate assembly of the tooling fixture 92. Although Fig. 7 illustrates the tooling frame 100 being located radially outwardly relative to the outer posts 96, it is contemplated that the tooling frame 100 may be disposed radially inwardly of the outer posts 96 depending on which side of the staircase is to be formed. However, the arrangement shown wherein the tooling frame 100 is disposed radially outwardly of the outer post 96 is believed to be advantageous for facilitating trimming of step cutouts 104 in the side panels 38, inner reinforcing panels 58 and outer reinforcing panels 62.

In clamping the side panels 38, and inner and outer reinforcing panels 58, 62 to an inward side of the outer posts 96, the step cutouts 104 can be more effectively trimmed such as by using a suitable cutting device 106. For example, a router bit 110 of a router 108 may be moved along the outer posts 96 to facilitate formation of the step cutouts 104. As best seen in Fig. 10, the router 108 may be mounted on a radial arm 102 that extends radially from a central post 94 of the tooling fixture 92. The radial arm 102 may be pivoted or rotated about the central post 94 to allow trimming of the horizontal portion of the step cutouts 104. The router 108 but may also be guided along the outer posts 96 for forming the vertical portions of the step cutouts 104. The router 108 may also be guided in a diagonal or helical direction to form the

trim line 88 on the back end of the curved staircase 10 as shown in Figs. 1, 6, 8 and 13.

The cutting device 106 itself is not necessarily limited to a router 108. Any cutting means such as a handsaw, a circular saw, or other suitable means such as a laser cutting device may be utilized for forming the step cutouts 104 and trim line 88. Regardless of the chosen means, the cutting device 106 is preferably configured to form the vertical portion of the step cutout 104 generally flush with the outer posts 96. Likewise, the cutting device 106 is preferably configured to form the horizontal portion of the step cutouts 104 normal to the surface of the side panels 38.

The side panels 38 are oriented as shown in Figs. 8 and 11 forming a plurality of module joints 52 wherein the side panels 38 abut one another. The inner reinforcing panels 58 are arranged as shown in Figs. 8 and 12 forming a plurality of inner panel joints 60 where the inner reinforcing panels 58 abut one another. The outer reinforcing panels 62 are arranged as shown in Figs. 8 and 13 forming a plurality of outer panel joints 64 where adjacent outer reinforcing panels 62 abut one another. As can be seen, each of the side panels 38, inner reinforcing panels 58 and outer reinforcing panels 62 are disposed in angularly stacked arrangement similar to that which is described above for the step modules 36 shown in Figures 1-6. The inner reinforcing panels 58 are disposed in layered arrangement over the side panels 38 and may be temporarily clamped to the outer posts 96 as shown in Fig. 7. The inner reinforcing panels 58 are specifically sized and configured and are arranged to straddle or overlap the module joints 52. Likewise, the outer reinforcing panels 62 are specifically sized and configured and are arranged to straddle or overlap the inner panel joints 60.

The tooling fixture 92 is adapted to facilitate installation of preformed holes 114 in the side panels 38 and in the inner and outer reinforcing panels 58, 62. In addition, the tooling fixture 92 is configured to allow for temporary clamping of the side panels 38 and inner and outer reinforcing panels 58, 62 to the outer posts 96 during installation of the preformed holes 114. Mechanical fasteners 116 such as nut and bolt combinations 118 may then be installed into the preformed holes 114. After the completion of the staircase kit, the mechanical fasteners 116 may be removed from the preformed holes 114 to allow disassembly and removal of the staircase kit from the tooling fixture 92. At the job site, the staircase kit is then re-assembled with

the side panels 38 and in the inner and outer reinforcing panels 58, 62 being positioned in the same relative locations and interconnected using mechanical fasteners 116. The mechanical fasteners 116 aid in securing the side panels 38 and the inner and outer reinforcing panels 58, 62 together.

The side panels 38 and inner and outer reinforcing panels 58, 62 are fabricated from arch segments 90 that are themselves fabricated from a plurality of laminated members 40 layered over one another and formed according to the disclosure provided in U.S. Patent No. 4,955,168 issued to Barry, the entire contents of which is incorporated herein by reference. The arch segments 90 may be generally semi-circularly shaped having a radius of curvature 66 that is dictated by whether the arch segments 90 are to be formed into side panels 38, inner reinforcing panels 58 or outer reinforcing panels 62.

In addition to their particular radius of curvature 66, each of the arch segments 90 has a predetermined outer dimension (e.g., height and arc length) that is preferably compatible with the tooling fixture 92 and which also allows for the most efficient use of material with the least amount of waste. In addition, the arch segments 90 are preferably formed at a height that is complementary to the chosen riser height 50 of the curved staircase 10. For example, arch segments 90 of approximately seven (7) inches in height may be used to form the side panels 38. The arch segments 90 for the inner and outer reinforcing panels 58, 62 are preferably formed at twice the riser height 50 or fourteen (14) inches. Forming the inner and outer reinforcing panels 58, 62 at twice the height of the side panels 38 provides uniform overlap of the joints formed in the layers of the staircase kit. It is contemplated that any height combination may be used for the side panels 38 relative to the inner and outer reinforcing panels 58, 62.

Referring briefly to Fig. 10, the side panels 38 are preferably provided in a thickness that is greater than the thickness of the inner and outer reinforcing panels 58, 62. For example, the side panels 38 may have a thickness of approximately 1-½ inches while the inner and outer reinforcing panels 58, 62 may have a thickness of approximately 1 inch as seen in Fig. 10. However, the side panels 38 may be formed in any thickness relative to the inner and outer reinforcing panels 58, 62.

As shown in Figs. 11-13, the arch segments 90 are located in the tooling fixture 92 in a layered arrangement such that each of the layers straddles the joints

formed between arch segments 90 of the immediately adjacent layer. For example, as was earlier mentioned, the inner reinforcing panels 58 are positioned in relationship to the side panels 38 such that the inner reinforcing panels 58 straddle the module joints 52 formed between the side panels. Likewise, the outer reinforcing panels 62 are disposed in overlapping relationship to inner panel joints 60 formed between the inner reinforcing panels 58.

Figures 8-9 illustrate the staircase kit as installed in the tooling fixture and illustrating the layering of the side panels 38 with the inner and outer reinforcing panels 58, 62. As can be seen, the staircase kit comprises a first layer comprised of the side panels 38, a second layer comprised of the inner reinforcing panels 58, and a third layer comprised of the outer reinforcing panels 62. As shown in Figs 9 and 11, each of the side panels 38 are preferably provided at the riser height 50 such that each side panel 38 is disposed in staggered relationship at an angular spacing that is complementary to the spacing between the outer posts 96.

As shown in Figs. 9 and 12, the inner reinforcing panels 58 are preferably provided at twice the riser height 50 and are generally disposed in staggered relationship at twice the angular spacing of the side panels 38 with the exception of the lowermost pair of inner reinforcing panels 58. As shown in Figs. 9 and 13, the outer reinforcing panels 62 are preferably also provided at twice the riser height 50 and are generally disposed in staggered relationship at twice the angular spacing of the outer posts 96. However, the lowermost one of the outer reinforcing panels 62 may be formed at half the riser height 50 to allow appropriate positioning of the outer panel joints 64 relative to the inner panel joints 60. Although only three layers are shown in Figures 7-13, it is contemplated that any number of layers may be used and in any overlapping pattern.

In view of the above-described preferred layering pattern, the arch segments 90 from which the side panels 38 and inner and outer reinforcing panels 58, 62 are fabricated are preferably positioned against the tooling fixture 92 such that there is sufficient overlap of the inner and outer reinforcing panels 58, 62 with respect to the side panels 38. In this manner, the layers may provide the necessary load-transferring capability across the module joints 52 and inner panel joints 60. The arch segments 90 preferably span a number of outer posts 96 sufficient to provide edge distance for an optimized bolt spacing or bolt pattern as defined by the preformed holes 114. The

bolt pattern is dictated in part by a desire to provide sufficient material for load transfer between adjacent layers (i.e., between the side panels 38 and inner and outer reinforcing panels 58, 62) and may also depend in part upon the overall size of the curved staircase 10 as installed. The bolt pattern may further be dictated by whether the staircase kit will be used to form an "inside (or outside) radius free standing version" or an "entirely free standing version 74."

In addition to the side panels 38 and inner and outer reinforcing panels 58, 62., the staircase kit may also include front risers 46 and tread ledgers 48 which are interconnectable to the side panels 38 and inner reinforcing panels 58 as was described above in relation to Figures 1-6. The front risers 46 and tread ledgers 48 are preferably installed with the staircase kit at the job site to form the finished staircase 10. The front risers 46 and tread ledgers 48 are formed to be complementary to the riser height 50. The riser height 50 and tread depth collectively define the geometry of the step cutouts 104 which are formed into the staircase kit while it is temporarily secured to the tooling fixture 92.

Referring to Figures 7 and 11-13, the arch segments 90 are each sized to span several bays between the outer posts 96. However, it should be noted that the arch segments 90 may be provided in any size (e.g., height and arc length) and in any shape to span a lesser or greater number of bays. Ideally, the arch segments 90 are sized to provide an optimal spacing between the outer posts 96 in accordance with the pitch of the curved staircase 10. The outer posts 96 are preferably spaced complimentary to the chosen tread 54 depth of the curved staircase 10.

The present invention further comprises a method of fabricating the staircase kit which comprises the steps of providing the tooling fixture 92, securing a first layer of vertically and angularly-stacked arch segments 90 to the outer posts 96 to form the plurality of side panels 38, securing a second layer of arch segments 90 over the first layer to form the plurality of inner reinforcing panels 58, and securing a third layer of arch segments 90 over the second layer to form the outer reinforcing panels 62. The method further comprises installing preformed holes 114 through the side panels 38 and inner and outer reinforcing panels 58, 62. The preformed holes 114 in each of the side panels 38 and inner and outer reinforcing panels 58, 62 are preferably formed in coaxial alignment with one another

As was previously mentioned, the outer posts 96 are preferably disposed at an angular spacing that is complimentary to the dimensions of the step cutouts 104. The method further comprises the steps of securing the side panels 38 to the outer posts 96 in abutting contact with one another such that a plurality of module joints 52 are formed between adjacently disposed side panels 38 as shown in Figure 11. Next, a plurality of the inner reinforcing panels 58 are secured against side panels 38 and vertically stacked in abutting relationship to one another such that adjacent ones of the inner reinforcing panels 58 form a plurality of inner panel joints 60 as shown in Fig. 12. As can be seen in Fig. 8, the inner panel joints 60 are preferably disposed in staggered relationship to the module joints 52.

In this same regard, a plurality of outer reinforcing panels 62 are disposed against the inner reinforcing panels 58 such that adjacent ones of the outer reinforcing panels 62 form a plurality of outer panel joints 64 as shown in Fig. 13. The outer panel joints 64 are preferably disposed in staggered relationship to the inner panel joints 60 as best seen in Fig. 8. Ideally, each of the module joints 52, inner panel joints 60 and outer panel joints 64 are disposed in staggered relationship to one another.

The preformed holes 114 may be installed by any means such as by drilling through the inner and outer reinforcing panels 58, 62 and side panels 38. The preformed holes 114 are formed while such members are temporarily clamped to the tooling fixture 92. A typical bolt pattern is shown in Figures 8 and in Figs. 11-13 and is arranged such that mechanical fasteners 116 may be installed adjacent to the step cutouts 104 to enhance load-carrying capability. In addition, the bolt pattern is such that the mechanical fasteners 116 are located adjacent the diagonal trim line 88 extending along a back side of the staircase 10 as shown in Fig. 13. In addition, the bolt pattern is preferably such that preformed holes 114 are installed on opposing sides of each of the module joints 52 and on opposing sides of each of the inner and outer panel joints 60, 64 for efficient load transfer.

The method of fabricating the staircase kit further comprises the installation of mechanical fasteners 116 such as the nut and bolt combination 118 into the preformed holes 114 as shown in Figure 9. Such mechanical fasteners 116 are preferably installed prior to cutting or forming of the step cutouts 104 or the trim line 88 and

while the side panels 38 and inner and outer reinforcing panels 58, 62 are still clamped to the tooling fixture 92.

Referring to Figs. 7 and 10, the method further comprises the steps of providing the cutting device 106, such as the router 108, which is specifically configured to be angularly moveable in a direction complimentary to the radius of curvature 66 of the tooling fixture 92 for cutting the horizontal portion of the step cutouts 104. In addition, the cutting device 106 is specifically configured to be axially moveable (i.e., upwardly and downwardly) along a direction parallel to each of the outer posts 96 of the tooling fixture 92 for cutting the vertical portion of the step cutouts 104. The router 108 can also be moved diagonally or helically in order to allow cutting of the trim line 88 shown in Figs. 1, 8 and 13.

The method further comprises the step of labeling each of the components of the staircase kit with the appropriate positional marking A. As shown in Figures 11-13, each of the side panels 38 and inner and outer reinforcing panels 58, 62 are labeled with the positional marking A which corresponds to the location of its position on the tooling fixture 92 and position relative to other components of the staircase kit. The positional markings A may comprise a sequence of numbers corresponding to the angular location between the outer posts 96. For example, the positional markings A may comprise reference characters "A1, A2, A3, etc." for the side panels 38. Likewise, the inner and outer reinforcing panels 58, 62 may be labeled as "B1, B2, B3" and "C1, C2 and C3" in correspondence to their positions between the outer posts 96. Each of the side panels 38 and inner and outer reinforcing panels 58, 62 is thereby labeled to allow for correct re-assembly of each piece in the same relative position at the job site.

The method of fabricating the staircase kit may further comprise the steps of fabricating a plurality of the front risers 46 and tread ledgers 48 which are configured to be interconnected to the assembled side panels 38 and inner and outer reinforcing panels 58, 62. In this regard, the front risers 46 and tread ledgers 48 are configured similar to that shown in Figures 1-6 as described above. The method of fabricating the staircase kit may further comprise providing a plurality of the treads 54 which are configured to be mountable on the side panels 38, tread ledgers 48 and front risers 46 when the staircase 10 is assembled.

The size of the front risers 46, tread ledgers 48 and treads 54 is dictated in part by the finished geometry of the staircase. More specifically, the front risers 46 and tread ledgers 48 are preferably configured to have a width that is complimentary to the vertical portion of the step cutouts 104. In addition, the front risers 46 and tread ledgers 48 preferably have a length that is complimentary to the spacing between inner and outer sides of the staircase 10.

For "inside radius freestanding versions" 72 of the curved staircase 10, the front risers 46 and tread ledgers 48 preferably have a length that allows for connection of the side of the curved staircase 10 to the appropriate structural members of the building. Alternatively, for "outside radius freestanding versions" of the curved staircase 10, the front risers 46 and tread ledgers 48 are preferable sized to allow for interconnection of the inner side of the curved staircase 10 to the appropriate structural members of the building. In this same regard, the treads 54 are preferably configured to be mountable on the side panels 38, tread ledgers 48 and front risers 46 and preferably have a length complimentary thereto. During assembly of the staircase kit at the job site, adhesive may be used between the layers (i.e., between the side panels 38 and inner reinforcing panels 58 and between the inner and outer reinforcing panels 58, 62) in combination with mechanical fasteners 116 in order to provide additional strength.

As was mentioned above, the staircase kit may be pre-fabricated to form any number of different versions of the curved staircase 10. For example, the staircase kit may be prefabricated in order to form the entirely free-standing, the inside radius free-standing, or the outside radius free-standing versions. In addition, it is contemplated that the staircase kit and method for fabricating thereof may be utilized to form curved staircases 10 and/or staircases having generally straight portions. For the entirely free-standing version 74 of the curved staircase 10, the staircase kit preferably comprises a pair of sides each comprised of side panels 38 having overlapping inner and outer reinforcing panels 58, 62. The sides are disposed in spaced relationship such that front risers 46 and tread ledgers 48 extend between the sides. Furthermore, the staircase kit for the entirely free-standing version 74 comprises a plurality of treads 54 mountable on at least the side panels 38 and tread ledger 48 and front riser for supporting the tread thereon as shown in Fig. 6A.

During interconnection of the staircase kit to the building structure 12, additional structural elements may be utilized at strategic locations in. For example, strap members 22 similar to that illustrated in Figure 1 may be applied to connect the staircase to the upper and/or lower levels 16, 14 of the building structure 12. Similar to that which was earlier described, the strap member 22 may be utilized to connect an upper portion of the staircase kit to beams 70 and/or horizontal floor joists 20. Likewise, at the lower level 14, the strap member 22 may be provided to anchor the staircase to the building structure 12. A finishing material such as drywall, finished wood or other coverings may be applied to the exposed surfaces of the curved staircase 10. For example, for inside radius free-standing versions 72 of the curved staircase 10, finishing material may be applied only to the outer reinforcing panels 62.

It should be also noted that the method of fabricating the curved staircase 10 may comprise the step of forming the diagonal trim line in the side panels 38 and inner and outer reinforcing panels 58, 62 while mounted to the tooling fixture 92. As shown in Figures 1 and 13, the trim line 88 is preferably formed at an angle that is complimentary to the general angle or pitch of the curved staircase 10 as dictated in part by the distance between the upper and lower levels 16, 14 of the building structure 12. Preferably, the trim line 88 is located inward of the outermost edges of the arch segments 90 such that a continuous cut line is formed along the side panels 38 and inner and outer reinforcing panels 58, 62. The trim line 88 is preferably formed following installation of all the mechanical fasteners 116 in the preformed holes.

Additional modifications and improvements of the present invention may also be apparent to those of ordinary skill in the art. Thus, the particular combination of parts described and illustrated herein is intended to represent only certain embodiments of the present invention, and is not intended to serve as limitations of alternative devices within the spirit and scope of the invention.

WHAT IS CLAIMED IS:

1. A staircase kit comprising:

a plurality of side panels having preformed holes extending therethrough, the side panels being disposable in stacked relation to one another and forming a module joint therebetween; and

at least one inner reinforcing panel having preformed holes extending therethrough, the inner reinforcing panel being disposable in overlapping relationship to the module joint;

wherein the preformed holes of the side panels are axially alignable with the preformed holes of the inner reinforcing panel such that mechanical fasteners may be installed thereinto for interconnecting the side panels.

2. The staircase kit of Claim 1 further comprising:

a plurality of the inner reinforcing panels forming at least one inner panel joint disposed in staggered relationship to the module joint; and

at least one outer reinforcing panel having preformed holes extending therethrough and being disposable in overlapping relationship to the inner panel joint;

wherein the preformed holes of the side panels are axially alignable with the preformed holes of the inner and outer reinforcing panels such that mechanical fasteners may be installed thereinto for interconnecting the side panels and inner reinforcing panels with the outer reinforcing panel.

3. The staircase kit of Claim 2 further comprising:

a plurality of the outer reinforcing panels disposed in overlapping relationship to the inner reinforcing panels and forming a plurality of outer panel joints disposed in staggered relationship to the inner panel joints.

4. The staircase kit of Claim 3 further comprising:

a pair of the side panels disposed in spaced relation to one another;

at least one front riser and tread ledger extending between the side panels; and

at least one tread mountable on the side panels, tread ledger and front riser.

5. The staircase kit of Claim 1 wherein each of the side panels is fabricated from a plurality of laminated members.

6. The curved staircase of Claim 1 wherein the side panels are arcuately shaped and having an outer convex surface and an inner concave surface and defining a radius of curvature.

7. The curved staircase of Claim 2 wherein at least one of the inner reinforcing panels and outer reinforcing panels are fabricated from a plurality of laminated members.

8. A tooling fixture adapted for installing preformed holes in side panels and at least one inner reinforcing panel for interconnecting the side panels of a staircase kit, the side panels being disposable in stacked arrangement, the tooling fixture comprising:

a plurality of arcuately-arranged outer posts disposed at an angular spacing relative to one another;

wherein the outer posts are adapted to have the side panels secured thereto during installation of the preformed holes in the side panels and inner reinforcing panel.

9. The tooling fixture of Claim 8 wherein each of the side panels is fabricated from a plurality of laminated members and is arcuately shaped and having an outer convex surface and an inner concave surface and defining a radius of curvature that is complementary to the arcuate arrangement of the outer posts.

10. The tooling fixture of Claim 8 wherein the staircase kit further comprises:

at least one of a front riser and a tread ledger extendable laterally from and interconnectable to the side panels, the front riser defining a riser height, the tread ledger defining a tread depth; and

a tread mountable on at least one of the tread ledger, the front riser and the side panels, the tread defining a tread depth;

wherein the angular spacing between the outer posts is complementary to the tread depth.

11. The tooling fixture of Claim 9 further comprising:

a cutting device configured to be angularly moveable along a direction complementary to the radius of curvature of the side panels and axially moveable along a direction parallel to the outer posts;

wherein:

the riser height and tread depth collectively define a step cutout;

the cutting device being configured to form a step cutout in the side panels.

12. The tooling fixture of Claim 11 wherein the cutting device is further configured to be move in a helical direction.

13. The tooling fixture of Claim 11 further comprising:

a central post having the outer posts disposed in radially spaced relation thereto;

a radial arm extending radially outwardly from the central post and being axially movable therealong and rotatable thereabout; and

wherein:

the cutting device being mounted on a free end of the radial arm and being configured to form the step cutout.

14. The tooling fixture of Claim 11 wherein the cutting device is a router having a router bit.

15. The tooling fixture of Claim 11 wherein the router bit is configured to be guided along at least one of the outer posts during forming of the step cutout.

16. A method of fabricating a staircase kit comprising the steps of:

providing a tooling fixture having a plurality of arcuately-arranged outer posts disposed at an angular spacing relative to one another and collectively defining a radius of curvature;

securing a plurality of vertically stacked side panels to the arcuately-arranged outer posts such that a plurality of module joints are formed between adjacently disposed side panels; and

securing a plurality of inner reinforcing panels against the side panels such that adjacent ones of the inner reinforcing panels form a plurality of inner panel joints disposed in staggered relationship to the module joints; and

extending preformed holes through the inner reinforcing panels and into the side panels.

17. The method of Claim 16 further comprising the steps of:

securing a plurality of outer reinforcing panels against the inner reinforcing panels such that adjacent ones of the outer reinforcing panels form

a plurality of outer panel joints disposed in staggered relationship to the inner panel joints; and

extending the preformed holes through the outer reinforcing panel in axial alignment with the preformed holes of the side panels and inner reinforcing panels.

18. The method of Claim 17 further comprising the steps of:

providing a cutting device configured to be angularly moveable along a direction complementary to the radius of curvature and axially moveable along a direction parallel to the outer posts; and

forming a plurality of step cutouts in the side panels and inner reinforcing panels by angular and axial movement of the cutting device.

19. The method of Claim 18 further comprising the steps of:

mounting the cutting device on a radial arm extending from a central post located at a central of the radius of curvature, the radial arm being axially movable along and rotatable about the central post; and

forming the step cutout by angular and axial movement of the radial arm.

20. The method of Claim 18 further comprising the steps of:

providing a plurality of front risers and tread ledgers configured to be interconnected to and extend laterally outwardly from the side panels; and

providing a plurality of treads configured to be mountable on the side panels, tread ledgers and front risers.

21. The method of Claim 17 further comprising the step of:

forming the arch segments from a plurality of laminated members.

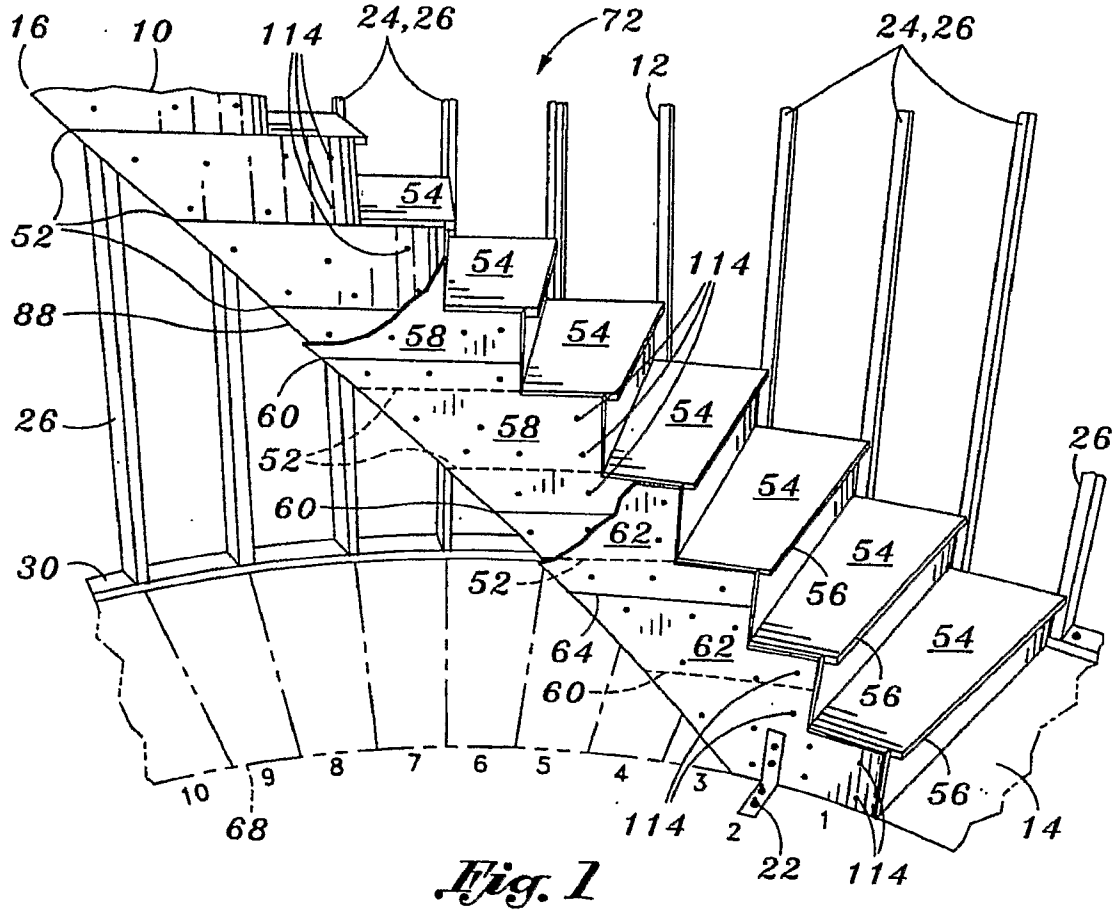
16
10
114
24,26
72
12
24,26
54
52
88
58
60
26
30
62
64
56
68
22
14

Fig. 1

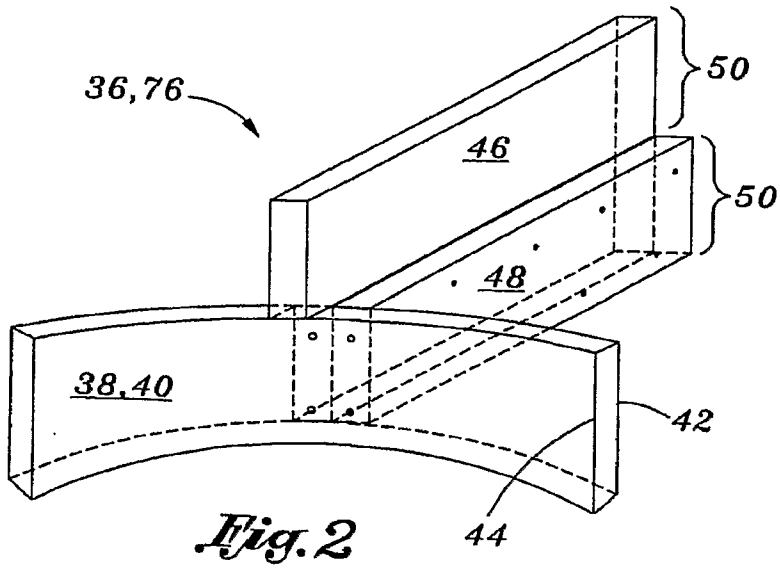
36,76
50
46
48
38,40
42
44

Fig. 2

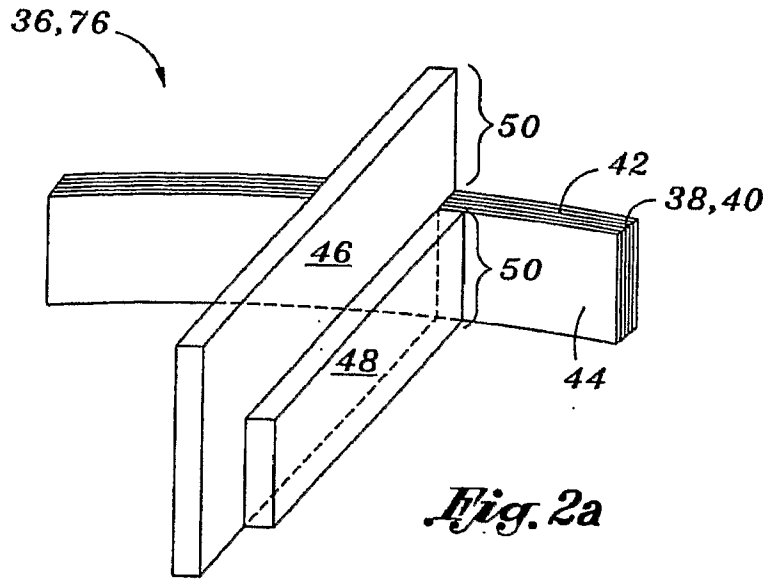

Fig. 2a

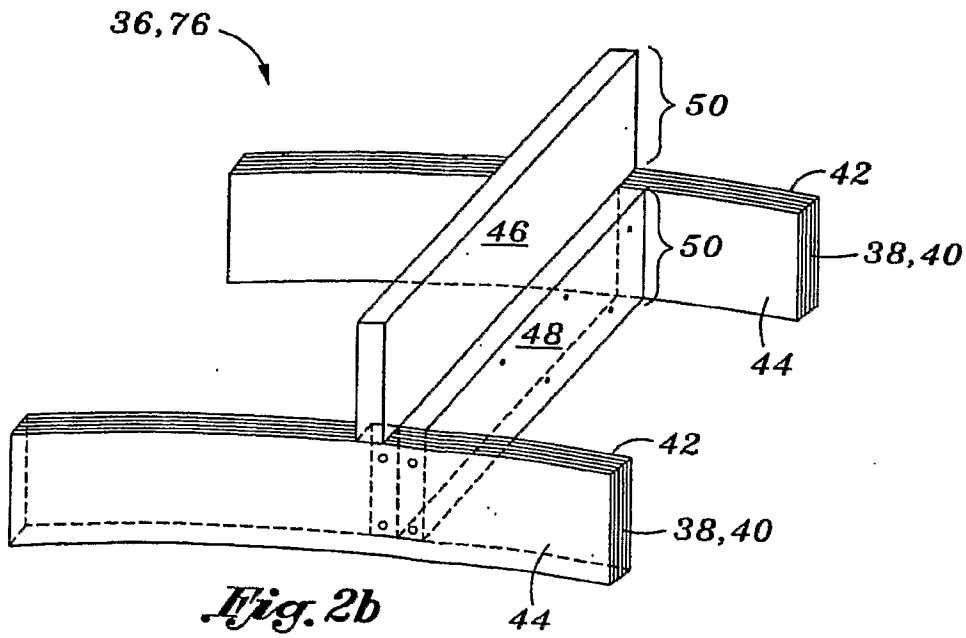

Fig. 2b

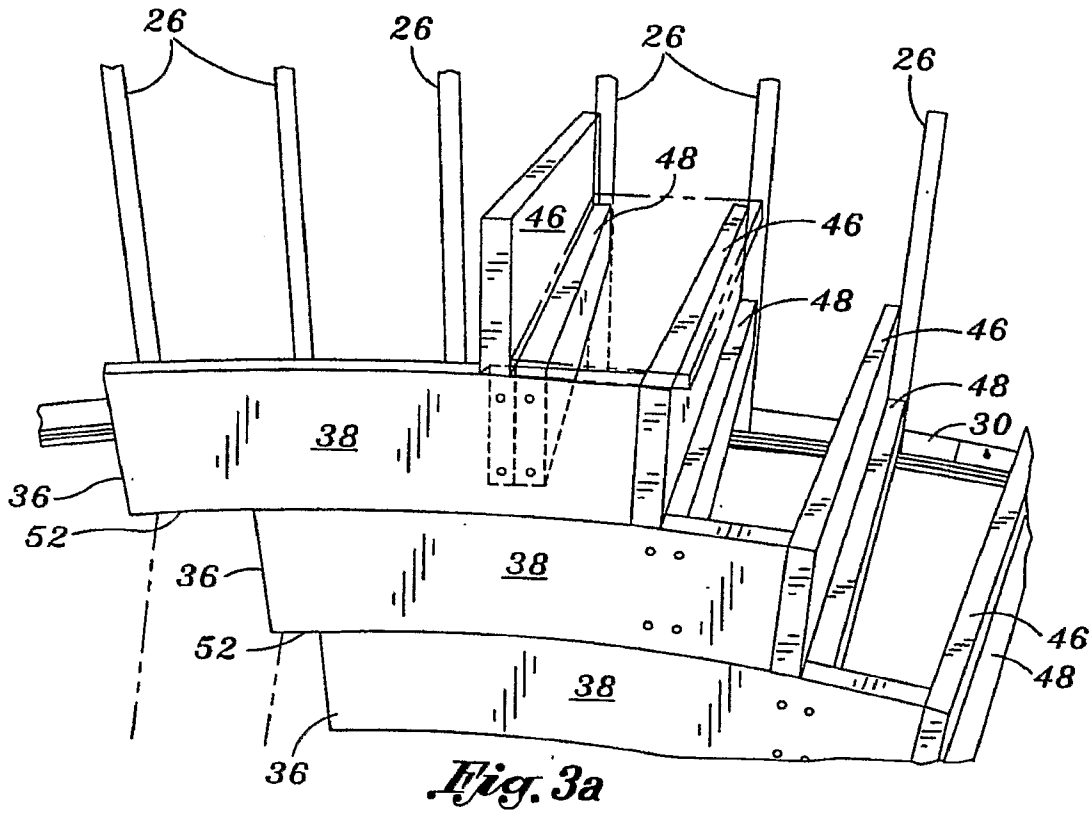
26
26
26
26
48
46
46
48
46
48
30
38
36
52
38
36
52
46
48
38
36

Fig. 3a

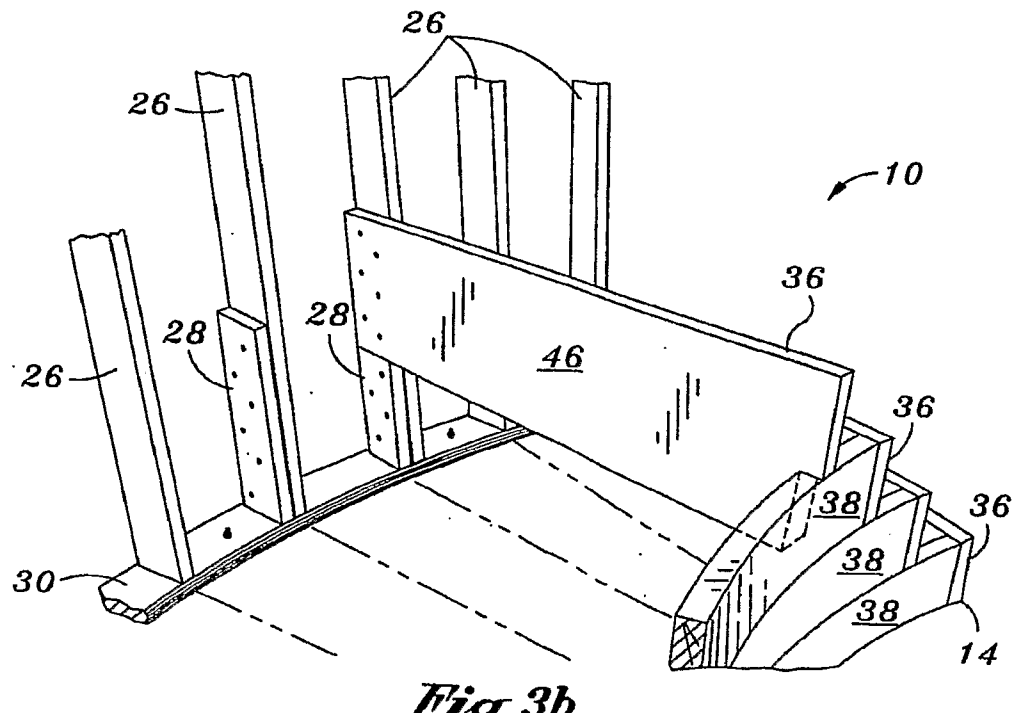
26
26
10
36
28
28
46
26
36
36
38
38
38
36
30
14

Fig. 3b

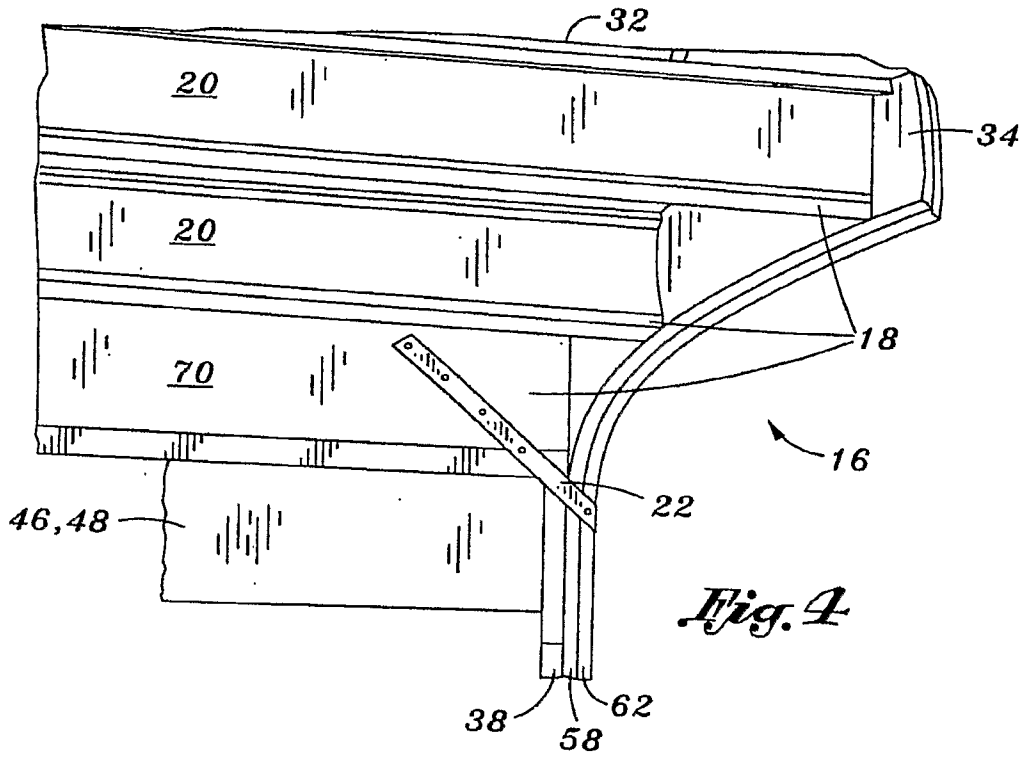
32
20
34
20
18
70
16
46,48
22
38
58
62

Fig. 4

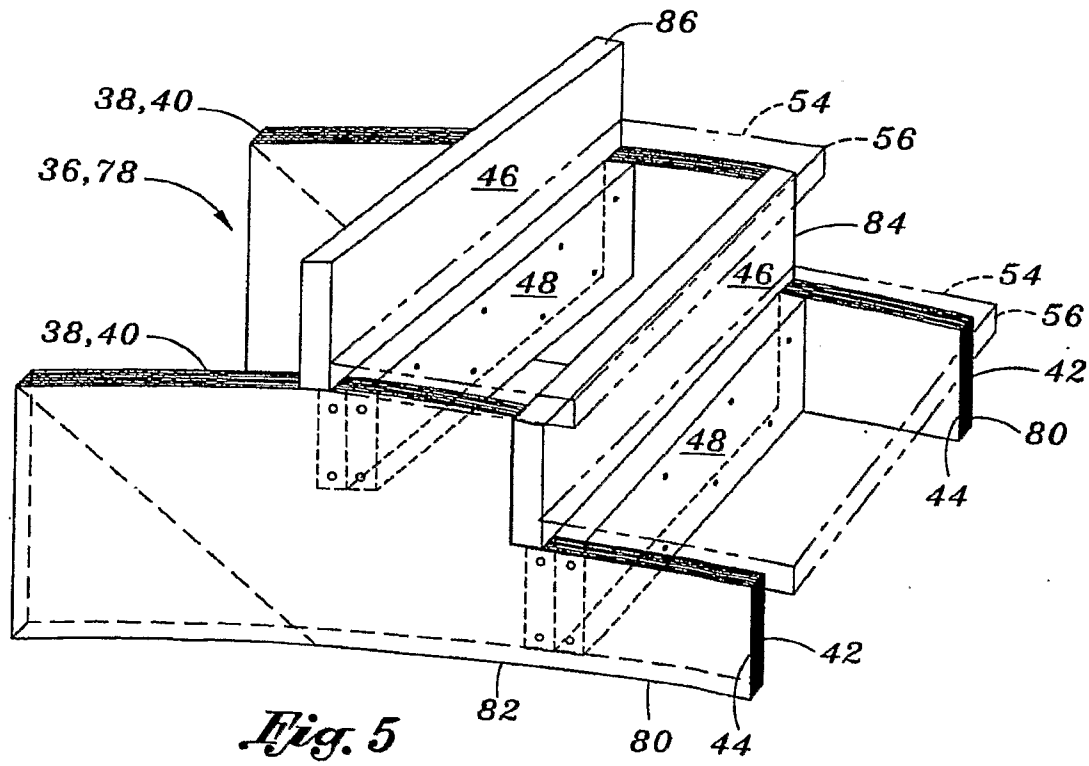
86
38,40
54
56
36,78
46
84
48
46
54
56
38,40
42
80
48
44
42
82
80
44

Fig. 5

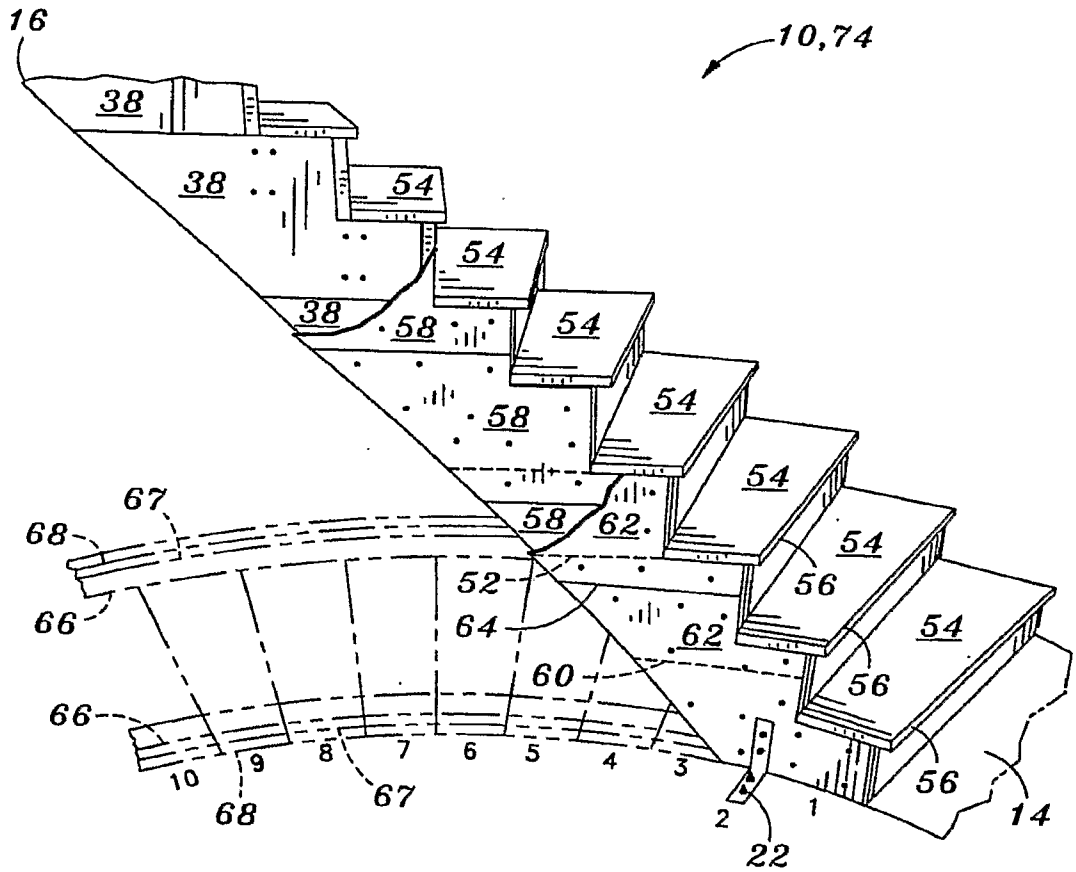
16
10,74
38
38
54
54
38
58
54
58
54
54
58
62
54
67
68
52
56
66
64
62
54
60
56
66
10
9
8
7
6
5
4
3
2
1
56
14
68
67
22

Fig. 6

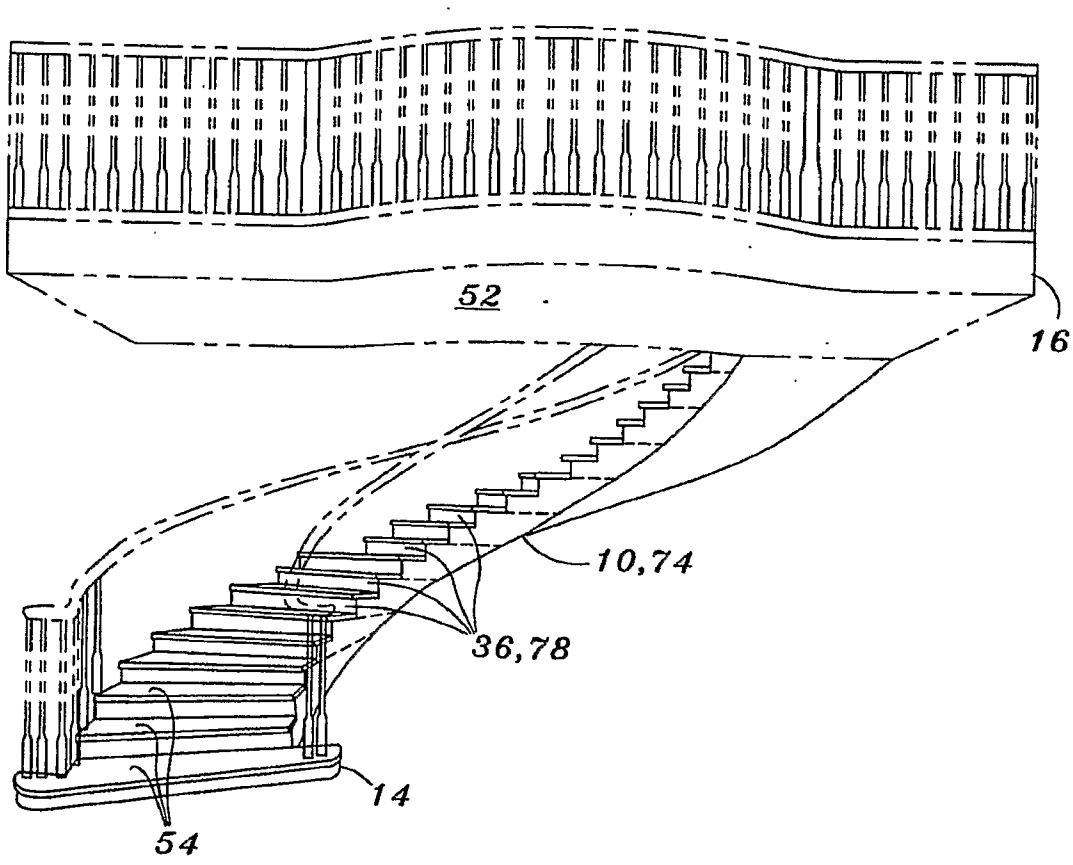

Fig. 6a

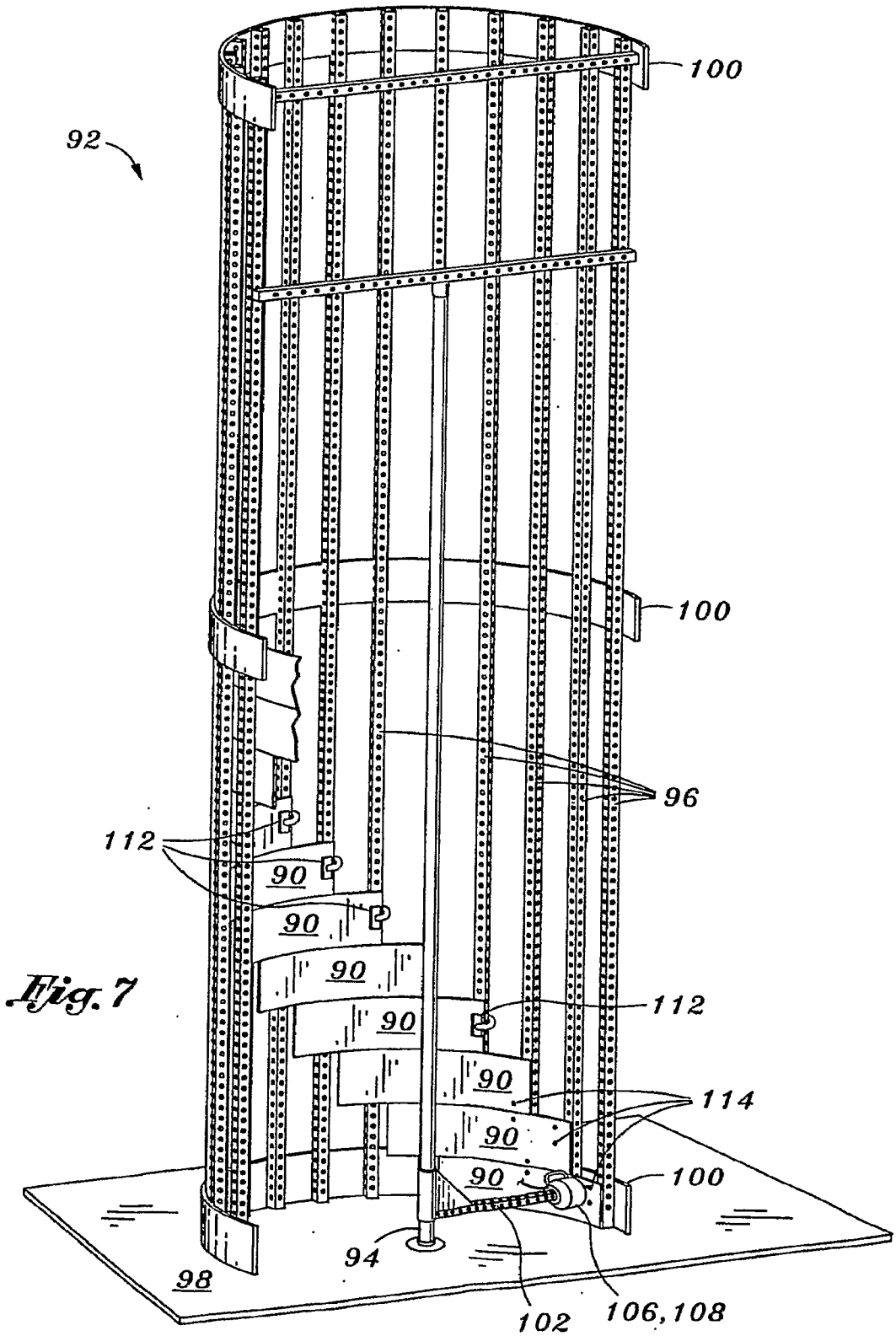

Fig. 7

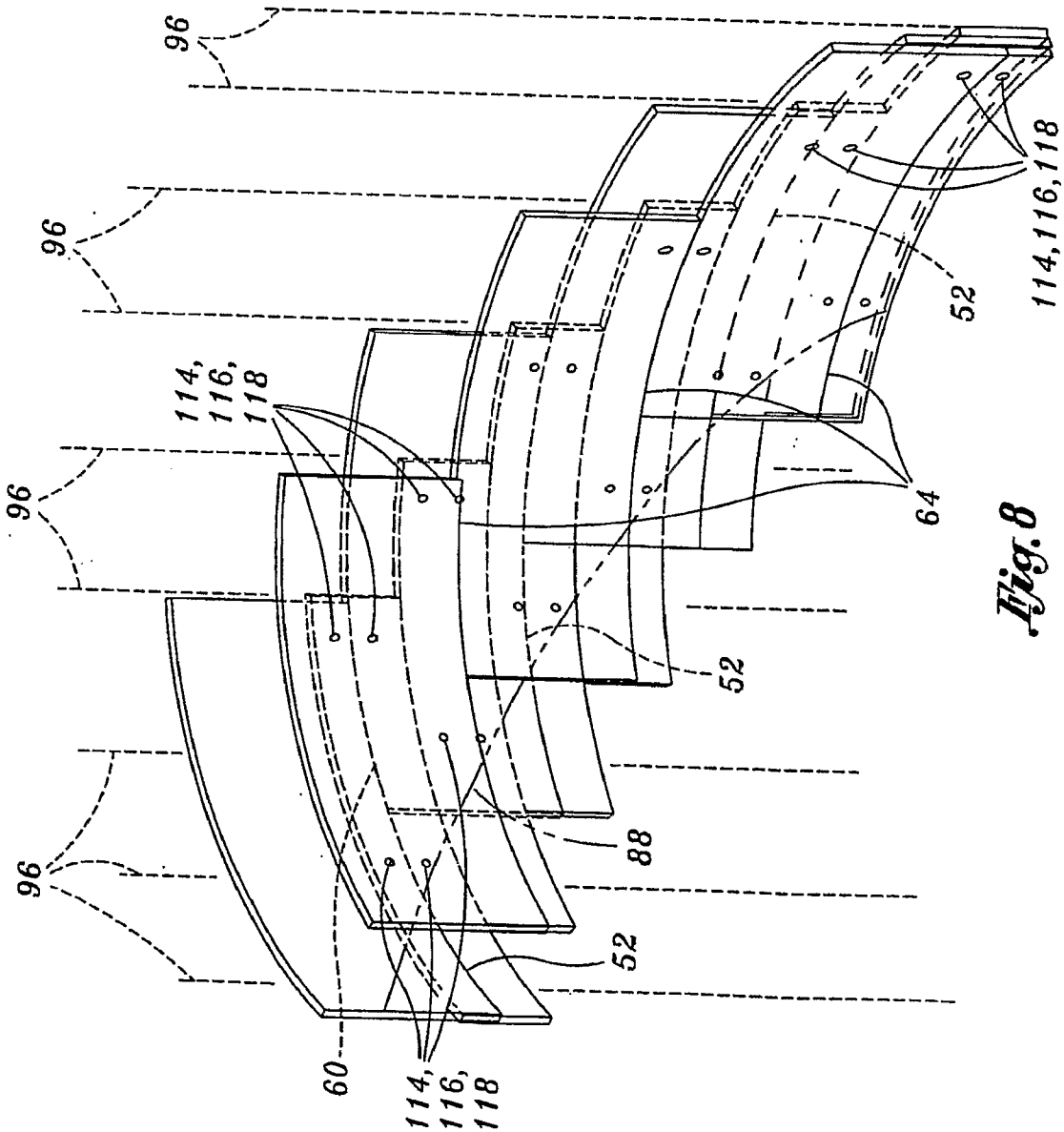

Fig. 8

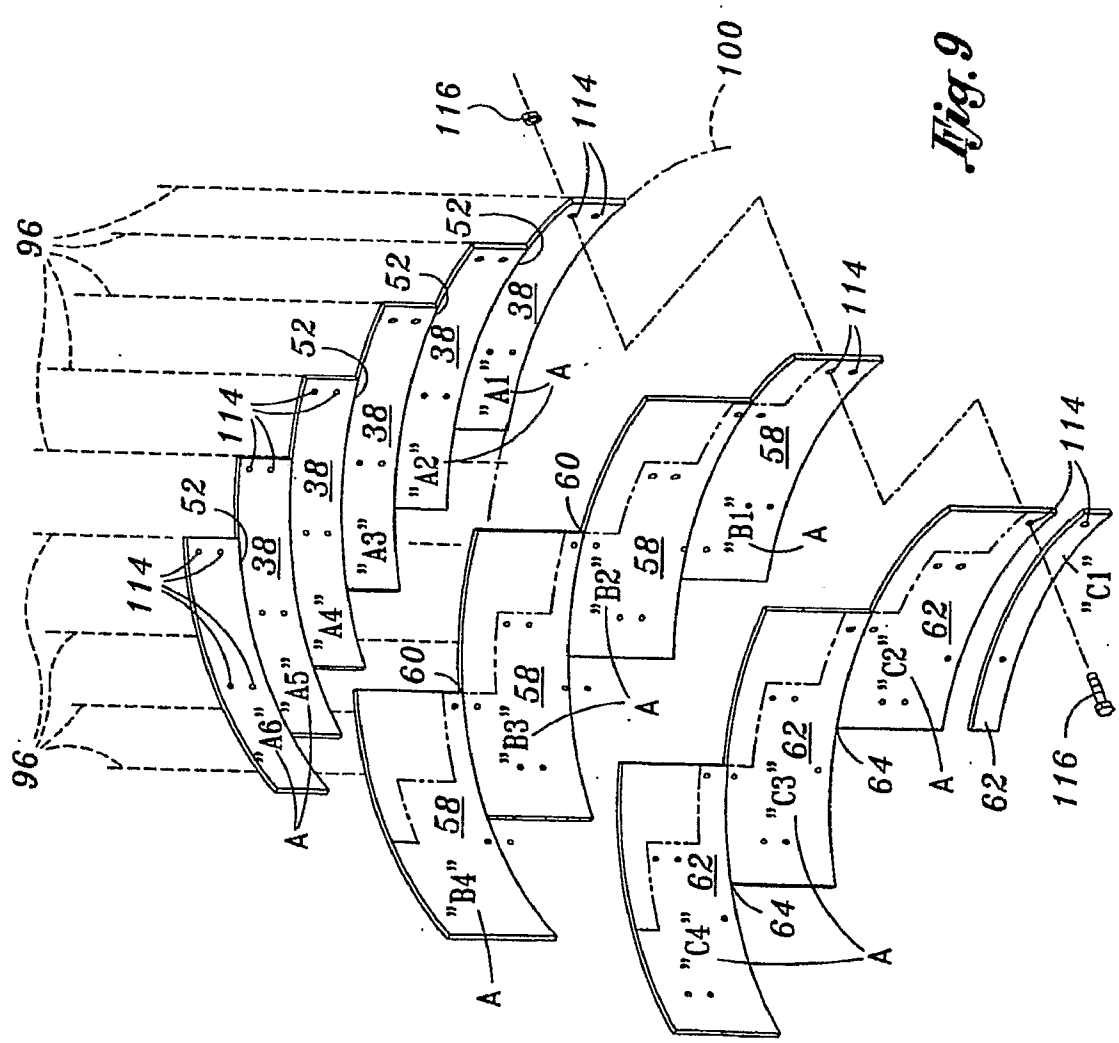
96
116
114
100
52
38
"A1"
"A2"
"A3"
"A4"
"A5"
"A6"
60
58
"B1"
"B2"
"B3"
"B4"
62
"C1"
"C2"
"C3"
"C4"
64
A

Fig. 9

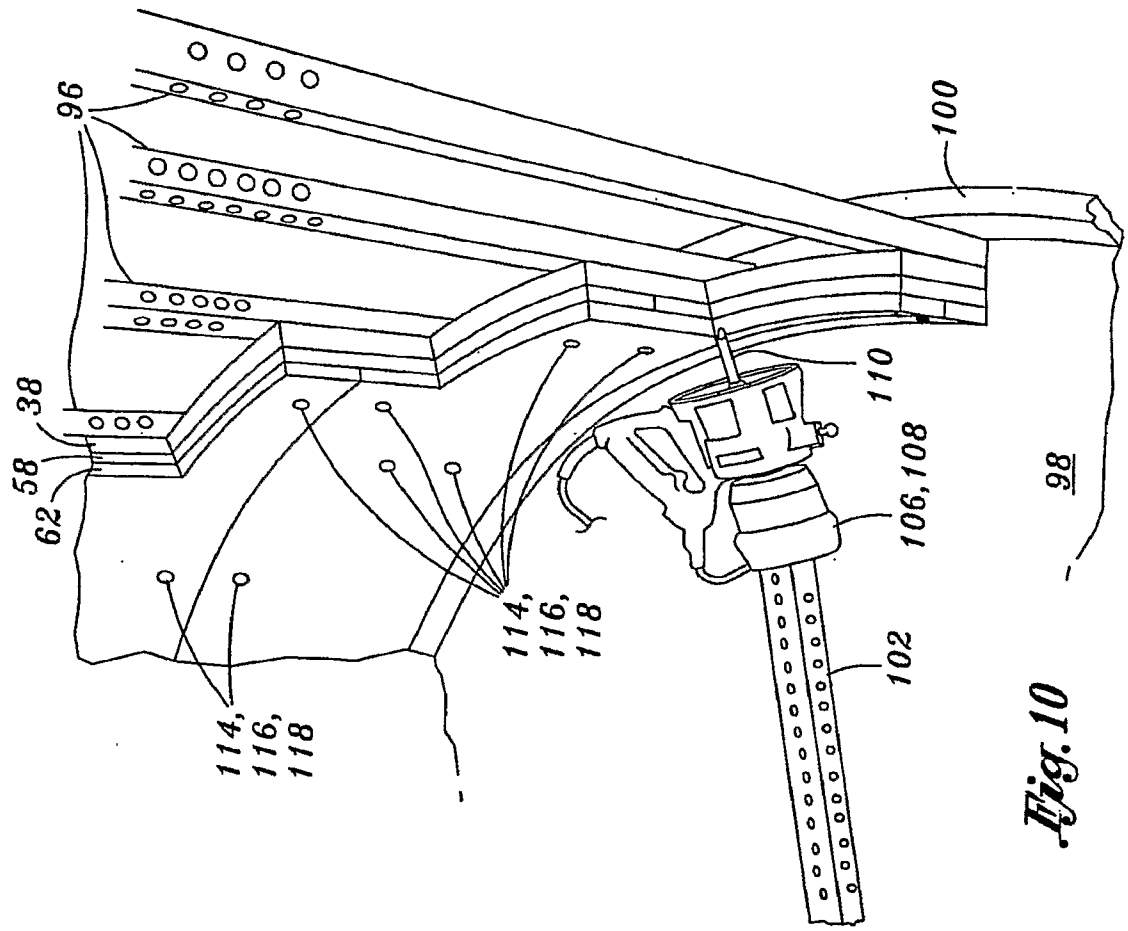

Fig. 10

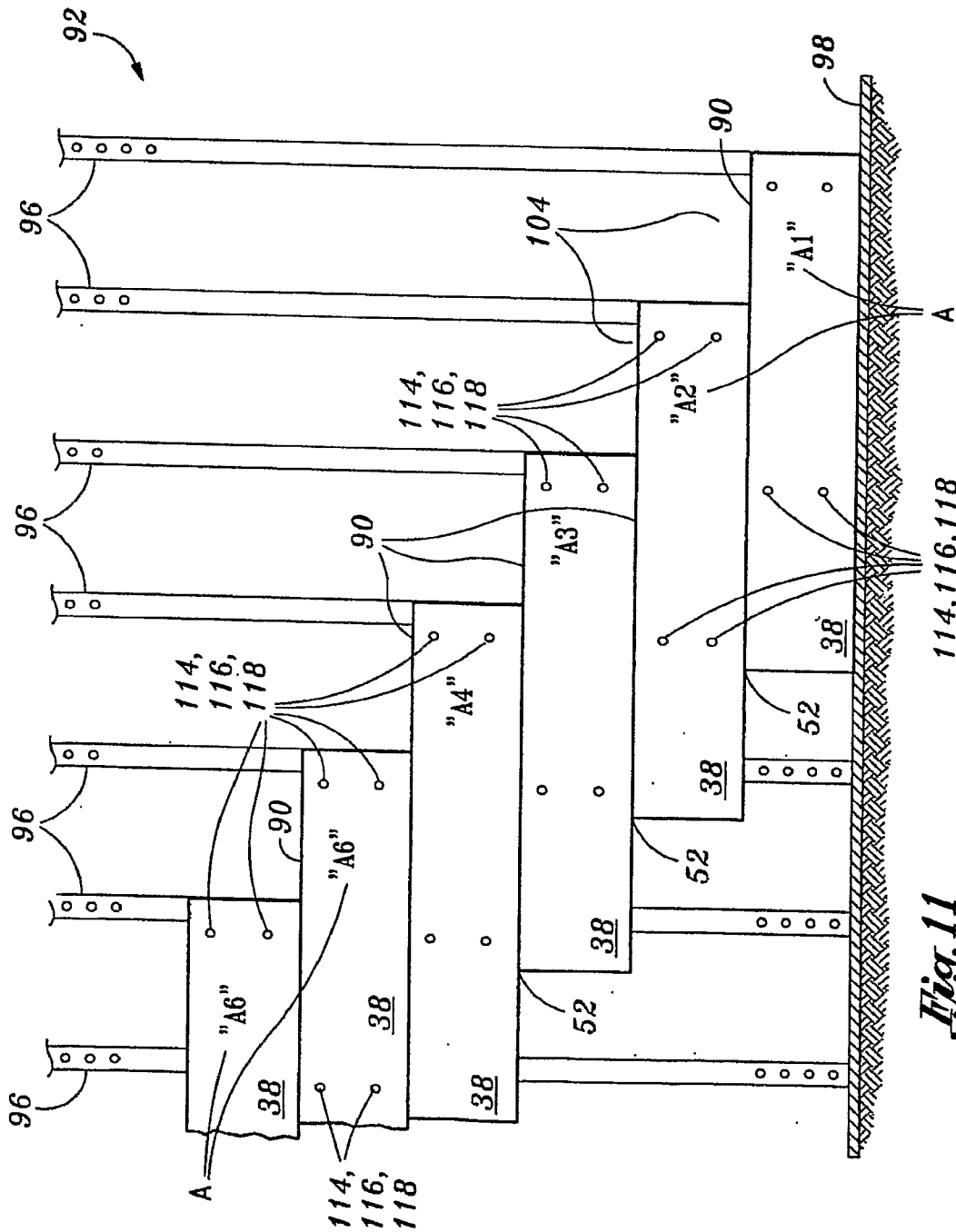
92
96
96
96
96
98
90
104
"A1"
A
114,
116,
118
"A2"
"A3"
90
114,116,118
"A4"
114,
116,
118
90
"A6"
"A6"
38
38
38
38
38
38
52
52
52
A
114,
116,
118

Fig.11

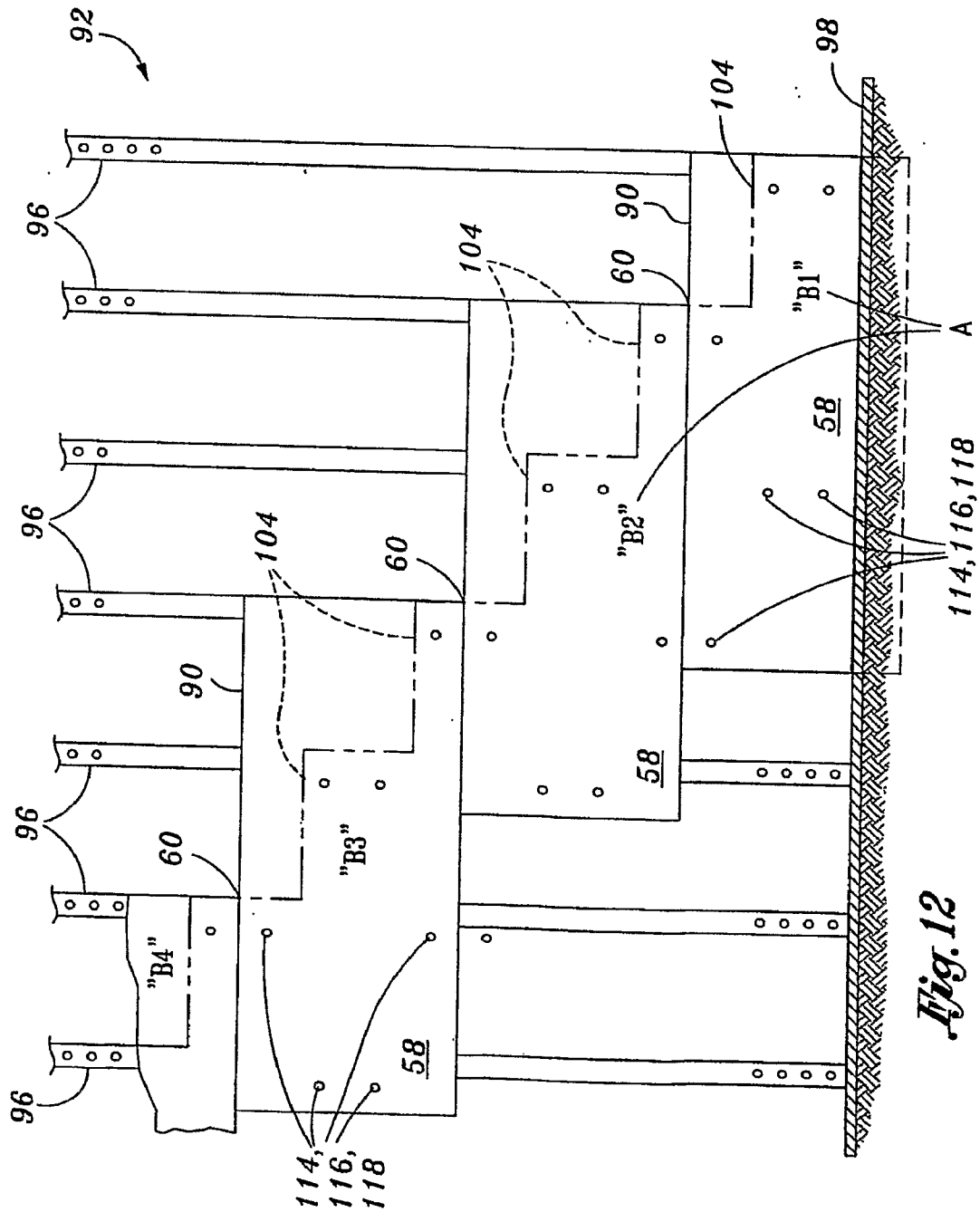

Fig. 12

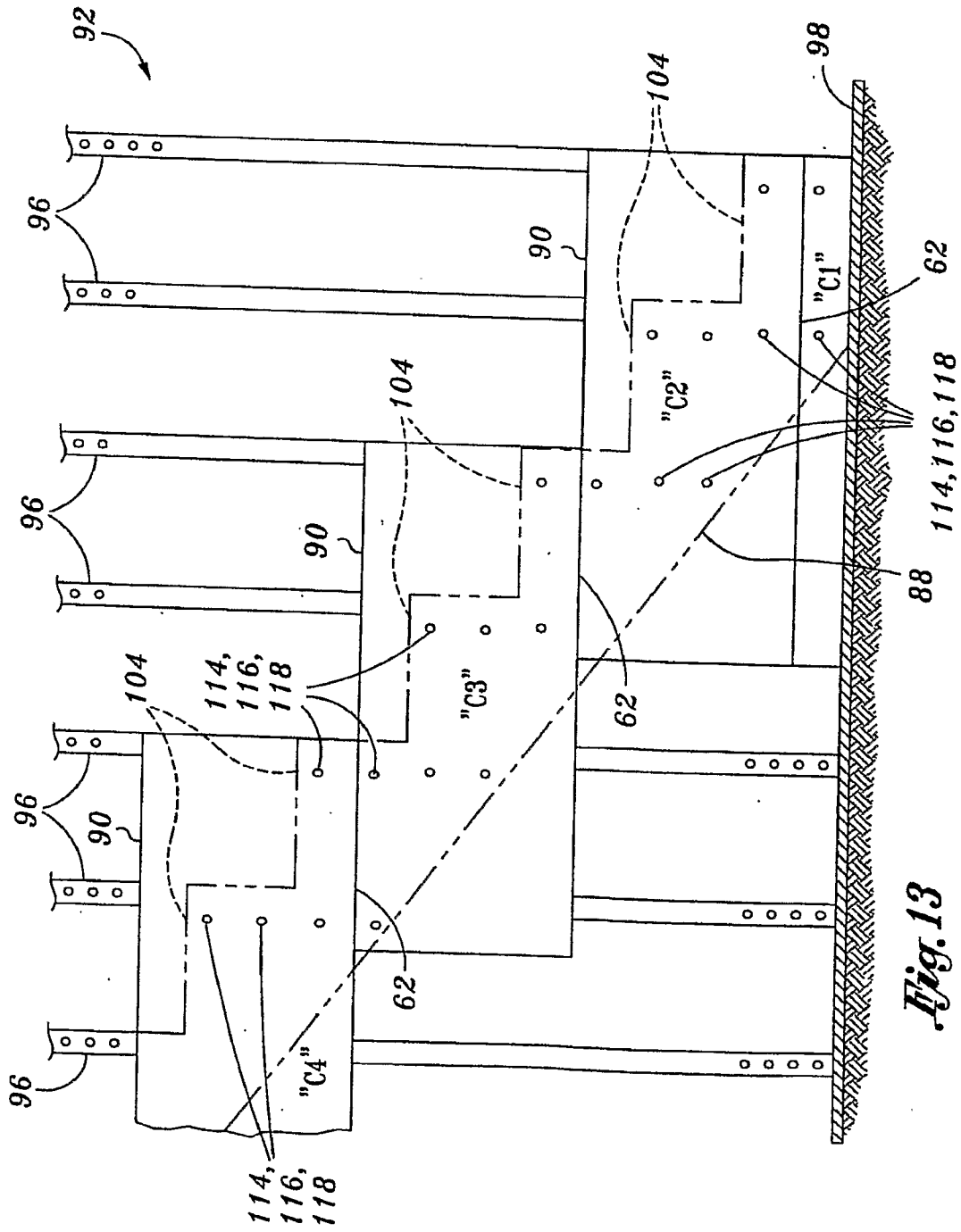

Fig. 13