Sept. 29, 1936. W. A. SMITH, SR 2,055,674

ROTATION MECHANISM

Filed Dec. 29, 1934

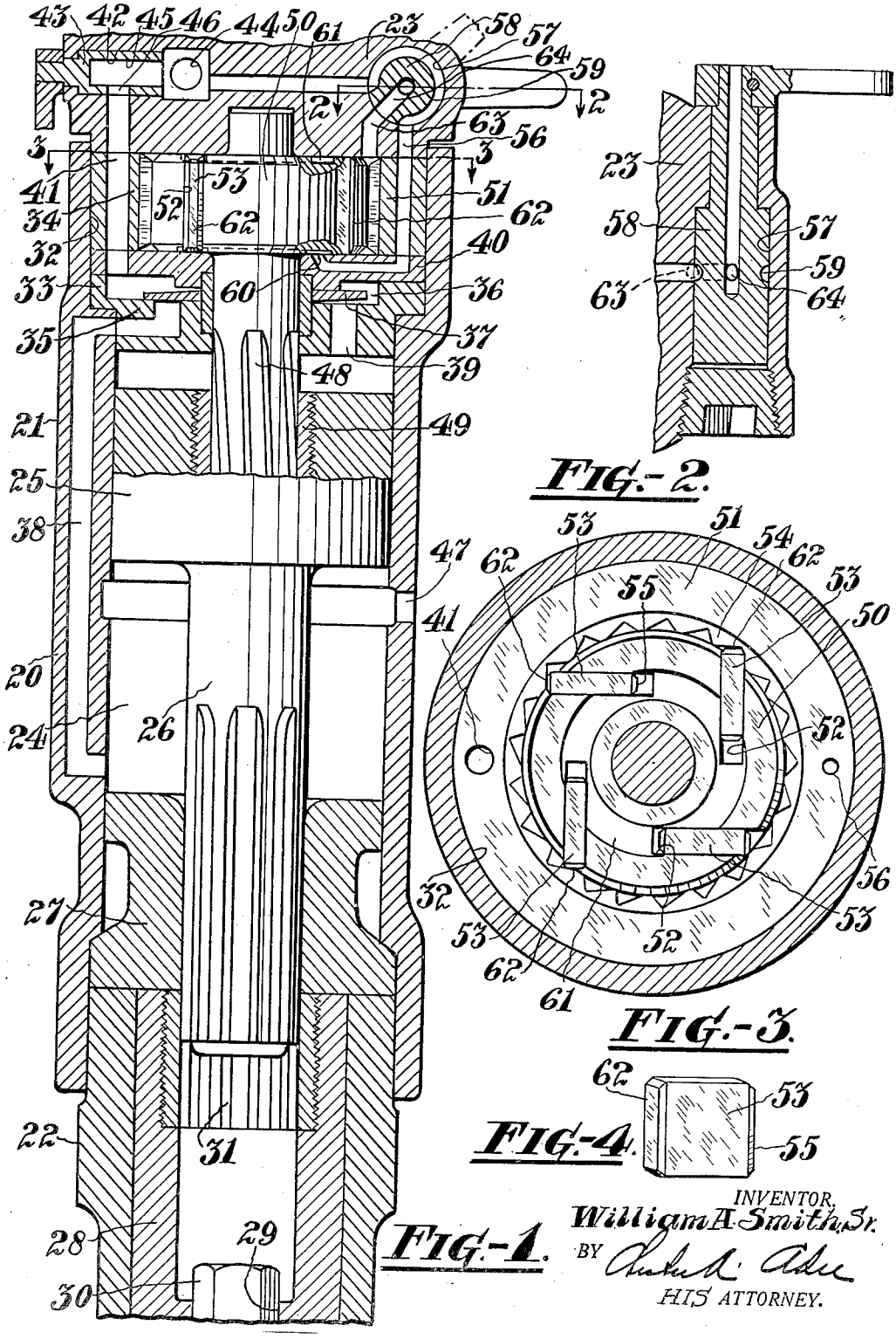

FIG.-1.

FIG.-2.

FIG.-3.

FIG.-4.

INVENTOR.
William A. Smith, Sr.
BY Chester A. Adee
HIS ATTORNEY.

Patented Sept. 29, 1936 2,055,674

UNITED STATES PATENT OFFICE

2,055,674

ROTATION MECHANISM

William A. Smith, Sr., Athens, Pa., assignor to Ingersoll-Rand Company, Jersey City, N. J., a corporation of New Jersey

Application December 29, 1934, Serial No. 759,657

4 Claims. (Cl. 121—7)

This invention relates to rock drills, and more particularly to a rotation mechanism for fluid actuated rock drills of the reciprocatory hammer type.

One object of the invention is to rotate the working implement in a step-by-step manner in order to shift it to a new position for each stroke of the hammer piston.

Another object is to simplify the construction and minimize the cost of maintenance of mechanism of this character.

Still another object is to enable the rotation mechanism to be selectively rendered effective or non-effective at the will of the operator.

Other objects will be in part obvious and in part pointed out hereinafter.

In the accompanying drawing and in which similar reference numerals refer to similar parts,

Figure 1 is an elevation, in section, of a rock drill equipped with rotation mechanism constructed in accordance with the practice of the invention,

Figures 2 and 3 are transverse views taken through Figure 1 on the lines 2—2 and 3—3, respectively, and

Figure 4 is a perspective view of a detail.

Referring more particularly to the drawing, 20 designates a rock drill comprising a cylinder 21 and front and back heads 22 and 23, respectively. These parts constitute the casing of the rock drill and may be secured in the correct relationship with respect to each other in suitable manner, as for instance by side bolts (not shown).

In the cylinder 21 is a piston chamber 24 containing a piston 25 having a fluted stem 26 at its front end which extends slidably through a front cylinder washer 27 inserted in the front end of the cylinder to form a closure for the piston chamber 24.

The front head 22 encases a rotary chuck 28 having a bore 29 in its forward portion to receive and interlockingly engage a working implement 30, only the shank of which is shown. The rearward portion of the bore 29 is suitably proportioned to receive the stem 26 of the piston and carries a fluted chuck nut 31 which interlockingly engages the flutes in the piston stem.

In the rear end of the cylinder 21 is an enlarged bore 32 for the accommodation of valve mechanism 33 and rotation mechanism 34. The valve mechanism is preferably arranged adjacent the rear end of the piston chamber 24 and comprises a valve seat 35 of which the front portion extends into the piston chamber 24 to serve as a closure therefor. The valve seat 35 is recessed to provide a valve chamber 36 wherein is arranged a valve 37, of the oscillatory plate type, which controls the flow of pressure fluid through inlet passages 38 and 39 leading from the valve chamber 36 to the front and rear ends, respectively, of the piston chamber. The valve seat 35 supports a plate 40 which forms a closure for the rear end of the valve chamber 36 and supports the rotation mechanism 34.

The pressure fluid distributed by the valve 37 flows to the valve chamber 36 through a supply passage 41 in the plate 40, the rotation mechanism 34 and the back head 23 and opening into a bore 42 which serves as a chamber for a throttle valve 43. The throttle valve chamber is in constant communication with a source of pressure fluid supply through a port 44, and in the throttle valve 43 is a recess 45 which affords communication between the port 44 and a port 46 in the throttle valve 43 adapted to register with the supply passage 41.

In the open position of the throttle valve 43, pressure fluid flows directly from supply to the valve chamber 36 and is distributed to the ends of the piston chamber for actuating the piston 25. The pressure fluid thus employed is exhausted to the atmosphere through a free exhaust port 47 in the cylinder 21 and controlled by the piston 25.

The rotation mechanism comprises a rifle bar 48 which extends through the plate 40, the valve seat 35 into the piston 25 and interlockingly engages a rifle nut 49 threaded into the piston 25. The rifle bar 48 carries a head 50 which is encircled by a ratchet ring 51 clamped between the back head 23 and the plate 40 and bears with one end against the back head 23 and with its other end against the plate 40. In the head 50 are a plurality of tangentially arranged slots 52 containing plungers 53 to engage ratchet teeth 54 on the inner surface of the ratchet ring 51.

The plungers 53 are in the form of rectangular plates of substantially the same height as the head 50 so that, in the assembled position of the plungers, the upper and lower surfaces thereof will cooperate with the adjacent surfaces of the back head 23 and the plate 40 to prevent the passage of fluid over the upper and lower surfaces of the plungers. The inner ends of the plungers 53 constitute pressure surfaces 55 against which pressure fluid normally acts constantly to force the plungers outwardly into position to engage the ratchet teeth 54. The pres-

sure fluid employed for this purpose is conveyed to the inner ends of the slots 52 by a supply passage 56 in constant communication with the port 44 and intercepted, in the present instance, by a bore 57 which serves as a chamber for a manually operable rotary valve 58.

In the periphery of the valve 58 is a groove 59 which, in one position of the valve 58, affords communication between the adjacent portions of the supply passage 56. The supply passage 56 opens directly into an annular groove 60 in the front end of the head 50 to assure an adequate supply of pressure fluid to all the pressure surfaces 55 of the plunger. A similar groove 61 is formed in the rear end of the head 50.

To the end that the outer surfaces 62 of the plungers 53 may normally be communicated with the atmosphere, the back head 23 is provided with a passage or vent 63 which leads from the space between the periphery of the head 50 and the inner surface of the ratchet ring to the bore 57 to communicate with a port 64 in the valve 58 and leading to the atmosphere. The various passages leading to the rotation mechanism are preferably so arranged that the port 64 may communicate with the passage 63 or with the portion of the passage 56 leading from the bore 57 to the groove 60, and that the groove 59 may establish communication with the several portions of the supply passage 56 or with that portion leading from the bore 57 to the bore 42 and the passage 63.

The operation of the device is as follows: Let it be assumed that the valve 37 and the piston 25 are in operation and that the valve 58 occupies a position in which the space between the periphery of the head 50 and the inner surface of the ratchet ring is communicated with the atmosphere through the passage 63 and the port 64 and, further, that the groove 59 lies in a position to communicate the several portions of the supply passage 56 with each other, in the manner illustrated in Figure 1 of the drawing.

With the parts in these positions pressure fluid flows from supply to the inner ends of the slots 52 and acts against the pressure surfaces 55 to force the plungers 53 outwardly in position to engage the ratchet teeth 54. Thus, as the piston moves rearwardly the rifle bar will be held against rotary movement by the plungers 53 and the teeth 54, and the piston, together with the chuck 28 and the working implement 30, will be caused to describe a partial revolution for shifting the drill bit to a new position in the hole being drilled.

Upon the admission of pressure fluid into the rear end of the piston chamber for again actuating the piston on its working stroke the rifle bar is rotated by the piston since then the outer ends of the plungers 53 will merely pass over the ratchet teeth 54. Upon reversal of the piston the plungers 53 will again engage the teeth 54 and thereby cause the working implement to be rotated to a new position. This cycle of operations may continue indefinitely to rotate the working implement in step-by-step fashion between blows of the hammer piston.

Should it be desired to render the rotation mechanism non-effective, as for instance when first starting the drill hole, the valve 58 may be rotated in counter-clockwise direction, as Figure 1 is viewed, to bring the port 64 into registry with the portion of the supply passage 56 leading from the bore 57 to the groove 60. The groove 59 will then communicate the passage 63 with supply. In this way the plungers 53 will be moved rearwardly in their slots to hold them out of engagement with the teeth 54. The rifle bar 48 may then rotate freely with respect to the ratchet ring, on both the forward and rearward stroke of the piston 25, until the drill hole has been started, whereupon the valve 58 may again be restored to its initial position to cause the plungers to be actuated into position for engaging the ratchet teeth 54.

I claim:

1. A rotation mechanism comprising a ring member, a bar member rotatable within the ring member, ratchet teeth on the ring member, guide apertures in the bar member, bearings for the bar member, rectangular plungers in the guide apertures each having a pressure surface and being slidable on the bearings, and means for supplying pressure fluid to the pressure surfaces for actuating the plungers into position to engage the ratchet teeth, thereby controlling the direction of rotation of the bar member.

2. In a fluid actuated rock drill, the combination of a casing having a piston chamber and a reciprocatory piston in the piston chamber, a rifle bar interlockingly engaging the piston, a head on the rifle bar, bearings for the ends of the head, plungers in the form of rectangular plates slidable in the head and cooperating with the bearings to effect a seal, a ratchet ring encircling the head, and means for constantly supplying pressure fluid to the plungers for actuating the plungers into engagement with the ratchet ring to control the direction of rotation of the rifle bar.

3. In a fluid actuated rock drill, the combination of a casing having a piston chamber and a reciprocatory piston in the piston chamber, a rifle bar interlockingly engaging the piston and having a head, a ratchet ring encircling the head, plungers slidable tangentially in the head to engage the ratchet ring and each plunger having a pressure surface on one end, a passage leading from pressure fluid supply to the pressure surfaces, a vent to communicate the other ends of the plungers with the atmosphere, and a valve to control the passage and the vent.

4. In a fluid actuated rock drill, the combination of a casing having a piston chamber and a reciprocatory piston in the piston chamber, a rifle bar interlockingly engaging the piston and having a head, a ratchet ring encircling the head, a plunger slidable tangentially in the head to engage the ratchet ring and having opposed pressure surfaces, and means including a valve and passages controlled thereby for selectively subjecting either pressure surface to pressure fluid and the other surface to atmospheric pressure.

WILLIAM A. SMITH SR.