March 31, 1936.

C. T. WALTER

2,036,001

SLICING MACHINE

Filed April 2, 1932

3 Sheets-Sheet 1

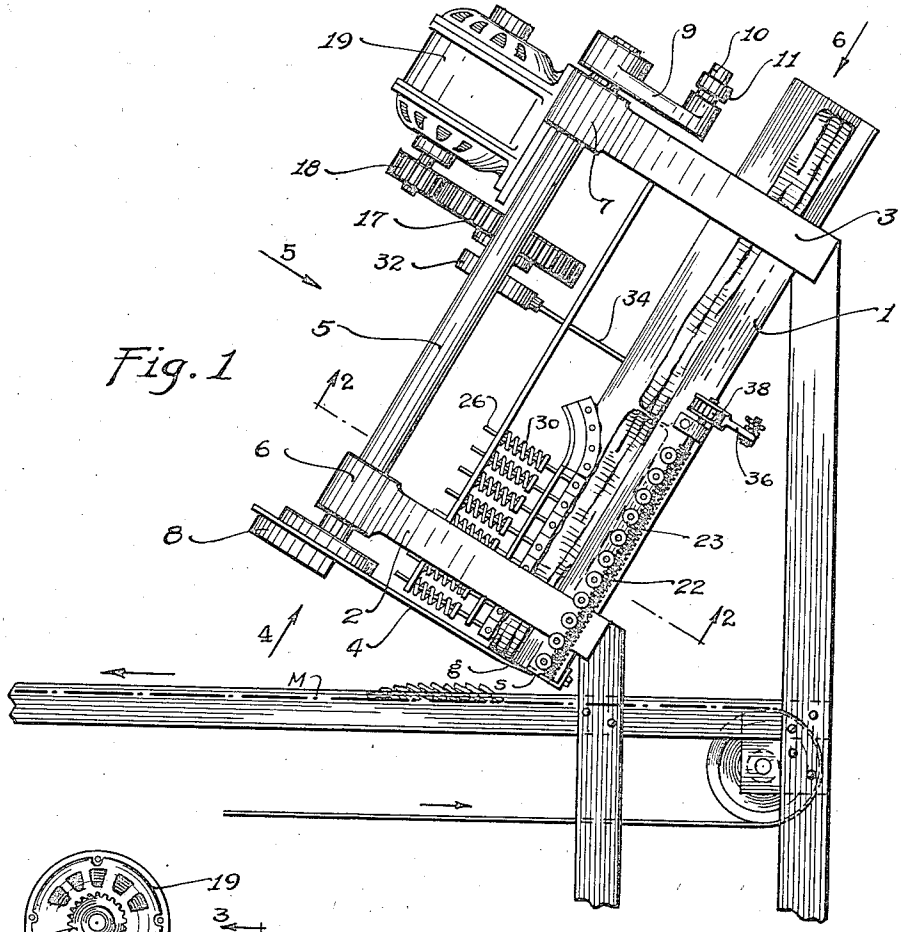

Fig. 1

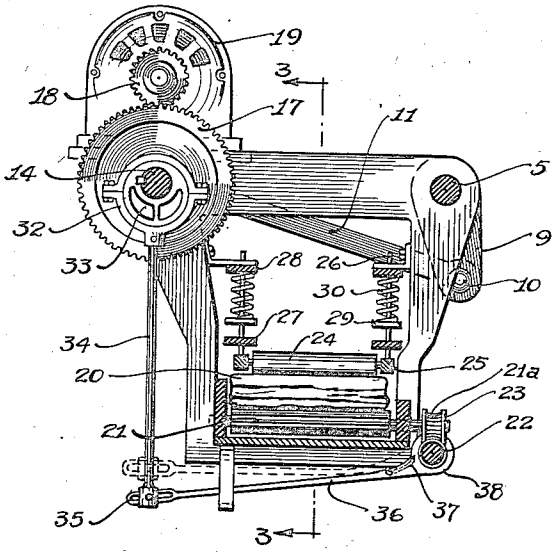

Fig. 2

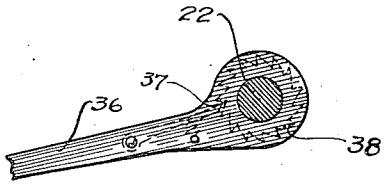

Fig. 7

WITNESS

Wm C. Meiser

Charles T. Walter

INVENTOR

BY Geo W. Johns

ATTORNEY

March 31, 1936. C. T. WALTER 2,036,001

SLICING MACHINE

Filed April 2, 1932 3 Sheets-Sheet 2

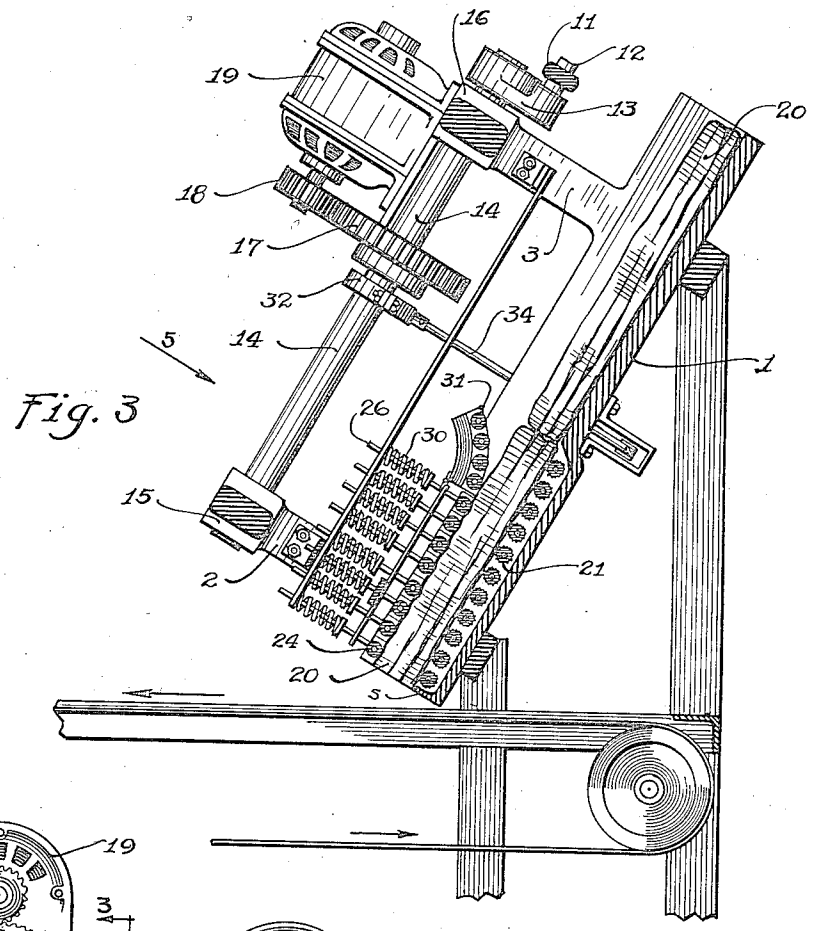

Fig. 3

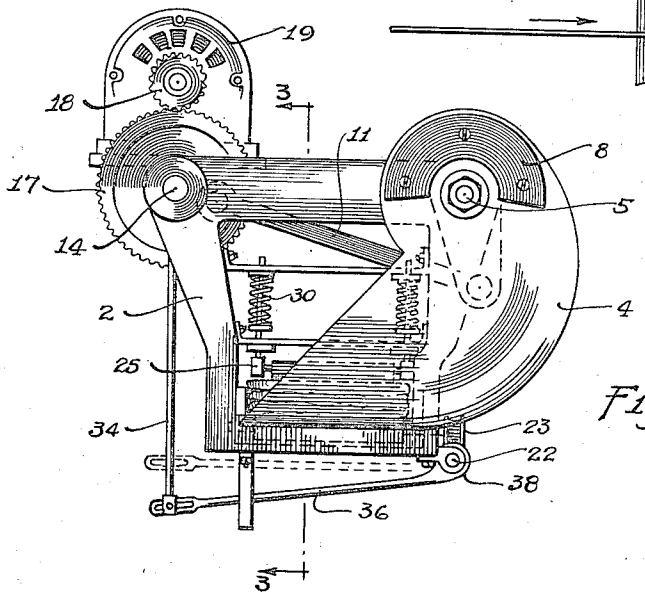

Fig. 4

WITNESS
Wm C. Meiser

Charles T. Walter
INVENTOR

BY Fay W. Johns
ATTORNEY

March 31, 1936. C. T. WALTER 2,036,001

SLICING MACHINE

Filed April 2, 1932 3 Sheets-Sheet 3

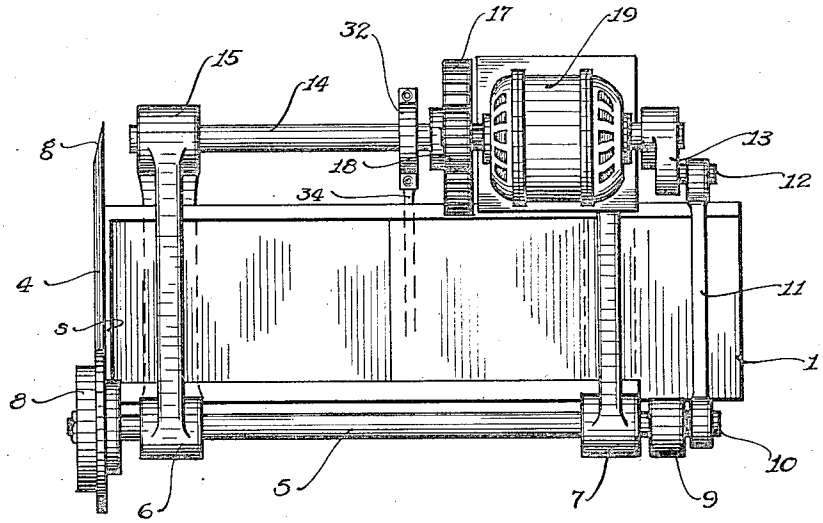

Fig. 5

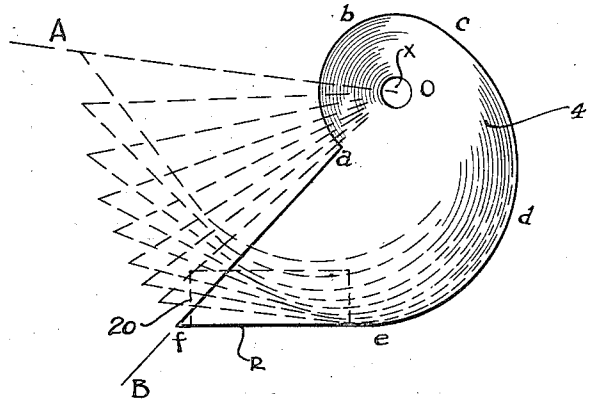

Fig. 6

Charles T. Walter
INVENTOR

BY Tony W. Johns
ATTORNEY

WITNESS
Wm C. Meiser

Patented Mar. 31, 1936 2,036,001

UNITED STATES PATENT OFFICE

2,036,001

SLICING MACHINE

Charles T. Walter, Chicago, Ill., assignor to Swift and Company, Chicago, Ill., a corporation of Illinois

Application April 2, 1932, Serial No. 602,708

13 Claims. (Cl. 146—95)

This invention relates to improvements in slicing machines.

One of the objects of this invention is to provide a knife of special configuration adapted to engage the upper side of a meat slab so as to sever a slice and so that during the last portion of the severing or slicing operation, the knife engages the lower side of the slab so as to impart, as between the knife and the lower side of the slab, a movement of the cutting section of the knife downwardly or in the direction of the support and so as to also impart to the said cutting section of the knife a transverse movement and consequential drawing cutting action along the lower side of the slab with the result that the final severing of a slice is obtained by the combination of a downward chopping action and a transverse drawing action for, along, and in respect to the full width of the lower side of the slab.

According to another aspect of the invention, a special transversely movable knife is employed to obtain the desired result. This special knife is mounted on a suitable longitudinally extending arbor or shaft so as to have an angular movement, more particularly, an oscillating or swinging movement, about or in respect to the longitudinal axis of its shaft. This knife has an initial cutting portion and a final cutting portion. The initial cutting portion has a starting section closest to its arbor or shaft, which initial section extends progressively outwardly from the arbor or shaft and merges into the final section which is preferably in the form of a straight cutting edge that is ordinarily wider than the strip of bacon severed thereby. This knife is employed in association with a suitable member for supporting a strip of bacon and this supporting member preferably, but not necessarily, has associated therewith a lower, adjustable, stationary knife section. This lower knife section extends transversely of the support and is substantially coextensive in length with the straight cutting edge portion of the knife and is arranged so that the straight edge of the oscillating knife and the relatively stationary knife are in substantial alignment. The final section of the knife and the adjustable stationary knife sections are in juxtaposed positions whereby during the final severance of the slice, it is subjected to the supporting and cutting effect of the lower stationary knife and to the combined downward cutting and transverse drawing action of the straight portion of the oscillating knife.

The invention, according to another aspect thereof, relates to a slicing machine particularly designed for cutting slabs or strips of bacon into slices but it will be understood that the machine has a use for slicing materials other than bacon.

The invention, according to another aspect thereof, relates to a slicing machine in which the material to be sliced is progressively fed in a direction longitudinally of the machine into successive positions for slices to be cut therefrom and which machine employs a cutter that effects the initial cutting on the top section of the material being sliced and which effects the final cutting of the material for the entire width thereof.

The invention, according to a further aspect thereof, relates to a slicing machine having means for supporting and progressively feeding the material to be sliced toward the cutter and in which the cutter is mounted on the longitudinally extending shaft that is driven from the motor in a manner to effect oscillation of the shaft and thereby move the cutter first through its successive cutting and severing positions and thereafter return the cutter to its initial position whereby the material to be sliced can be fed under the cutter preparatory to the next movement of the cutter for effecting the cutting and severing operation.

The invention, according to another aspect thereof, revolves about the placing of a slicing machine in such a position that the material being sliced is fed longitudinally of the machine along a downwardly extending path toward the cutter of the machine so that as the material is cut it gradually falls by gravity away from the cutter and so that when released by the final cutting operation it can readily fall upon a receiving and feeding mechanism located adjacent the delivery or cutting end of the slicing machine.

With these and other objects in view, the invention consists in the novel construction, combination and arrangement of parts hereinafter fully described, illustrated in the accompanying drawings, and pointed out in the claims hereto appended, it being understood that various changes in the form, proportion, and minor details of construction, within the scope of the claims, may be resorted to without departing from the spirit or sacrificing any of the advantages of the invention.

As illustrating a specific manner in which the invention may be realized, reference is made to the accompanying drawings, forming a part of this specification, and in which drawings:

Fig. 1 is a longitudinal view principally show-

ing in side elevation, but partly showing in section, the bacon slicing machine, and in association therewith a portion of a receiving conveyor arranged in position to receive slices of bacon as severed from the slab of bacon by the operation of the machine.

Fig. 2 is a transverse sectional view taken as on the plane indicated by the line 2—2 of Fig. 1, looking in the direction of the arrows.

Fig. 3 is a vertical longitudinal sectional view, taken as on the plane indicated by the line 3—3 of Figs. 2 and 4, looking in the direction of the arrows.

Fig. 4 is an end view of the machine shown in Fig. 1 and it is a view looking in the direction of the arrow 4.

Fig. 5 is a view of the machine looking in the direction of the arrow 5 shown in the several views.

Fig. 6 is a view showing the outer contour of the knife and its comparative size and relation in respect to a piece of bacon indicated in association therewith and this figure also shows in dotted lines, the successive positions which the knife occupies as it performs the cutting operation on the slab of bacon indicated.

Fig. 7 is a detail of the ratchet and pawl shown in Figs. 2 and 4.

Referring to the drawings in detail, 1 represents the bed proper or main frame of the machine and the direction indicated by the arrow 6 will be referred to as the forward longitudinal direction of the machine. In other words, the several slabs of bacon are fed longitudinally to and along the machine in the direction as indicated by the arrow 6. Rigid supporting members 2 and 3 extend upwardly—in fact at right angles and transversely—in respect to the longitudinally extending supporting frame member or bed 1. These supports 2 and 3 carry suitable bearings and are provided for supporting the motor, the main shaft driven therefrom and the knife supporting and driving shaft, as will hereinafter more fully appear.

The slicing knife of the machine is designated by 4. It is mounted rigidly on and secured fixedly to a longitudinally extending shaft 5 which is in fact in the apparatus shown an oscillating shaft although it will be understood that according to certain aspects of the invention it is feasible to have this shaft 5 operate as a revolving shaft instead of an oscillating shaft. This shaft 5 is rotatively mounted in bearings 6 and 7 and these bearings may be provided with adjusting features for the purpose of adjustably positioning the knife relative to the supporting frame of the machine, if desired, such as for compensating for the decrease in size of the cutter as it wears incident to continued use. As one portion of the knife extends from the axis of rotation a much greater distance than other portions, it is advisable to counterbalance the knife as by means of a counterbalancing member 8 secured thereto or to the shaft upon which the knife is mounted, the purpose of which counterbalance is to dynamically balance the oscillating mechanism as a whole. A crank arm 9 is rigidly fastened to shaft 5 and the free end of this arm carries a crank pin 10 which is pivotally connected to one end of link 11. The other end of the link 11 is pivotally connected to crank pin 12 which is rigidly fastened to rotate with crank 13, which crank 13 is mounted on a longitudinally extending main shaft 14 which runs in bearings 15 and 16. This main shaft 14 carries a spur gear 17 which is secured thereto and which spur gear is driven by a driving pinion 18 carried on and driven by the shaft of the motor 19. This part of the mechanism operates as follows:

The motor 19 runs at a constant speed, continuously drives and turns the main shaft 14 and thereby continuously rotates crank arm 13. This rotating crank arm, through the medium of link 11, oscillates the crank arm 9 through an angle such as that indicated by A—O—B in Fig. 6. The motion imparted to crank arm 9 by rotating crank 13 approaches a simple, harmonic motion and one characteristic of this motion is that the angular velocity of the moving parts passes through zero at the extreme ends of the cycle. Since the crank arm 9 and the slicing knife or cutter 4 are mounted on and are rigidly fastened or securely fixed to the longitudinally extending shaft 5 whereby the crank arm 9 successively and in turn imparts to the knife or cutter 4 the same reciprocating angular movement or movements that the reciprocating crank arm receives from its actuating mechanism, to-wit, from and through the medium of the actuating mechanism that comprises the continuously rotating crank arm 13 and link 11 that is provided for imparting to the crank arm the motion which is herein described as one which approaches a simple harmonic motion, it will be manifest that the knife and particularly the cutting edge of the knife which has the same angular motion as the crank 9 may be properly described as having a motion which approaches simple harmonic motion. In other words, the knife or cutter 4 may be described as a knife having simple harmonic motion and as functioning to effect during the early or first portion of a slice cutting movement a gradually or progressively quickening cutting movement into the fatty section of the bacon slab toward the lower side thereof followed by a gradually or progressively slowing down or decreasing of the cutting movement until the final portion of the cutter engages the lower side portion of the slab for the full width thereof and under conditions such that at the extreme end of the cutting operation the knife is at the extreme end of its cyclic movement, to-wit in that part of the cyclic movement wherein the cutting part or moving cutting element passes through zero and has no movement. Because a certain amount of knife over-travel past the finish of the cutting operation is necessary for reliable operation, the knife will have some velocity, although only a small velocity, at the time each bacon slice is released from the slab. This velocity is small, especially in comparison with the velocity existing in the case of a rotating knife running at the same number of cycles per minute.

The knife which is preferably employed in the invention of this application is clearly shown in Fig. 6, particularly in conjunction with Figs. 1, 4 and 5. In Fig. 6, it will be observed that substantially the first 180 degrees section thereof is defined by a semi-circular section marked *a—b—c* which as a matter of fact defines the smaller, outer contour of a body section of the knife blade. In Fig. 6, X indicates the opening for receiving the shaft or arbor 5. Approximately the next 135 degrees section of the knife blade—to wit, the section defined by *c—d—e* and subtended or measured by the angle *c*—O—*e*—, provides what is herein termed as the initial cutting section of the knife.

The smaller part, or starting part, of this initial cutting section extends from *c*; to wit, gradu-

ally from the smaller body section, with progressively increasing radii from the center of the knife outwardly toward the end of the 135 degrees section until at *e*, it merges into a relatively straight, final cutting section which extends substantially or approximately at right angles to the radius O—*e*, which radius extends from the place where the intermediate cutting section and the outer cutting section merge. This final cutting section is designated *e*—*f* and extends sufficiently long to cover approximately 45 degrees of the knife, as defined by the angle *e*—O—*f*. From the outer edge of the final cutting section, the blade takes a radial path from the extreme outer end *f* back to the smaller body section; namely, to the point *a*. It will be observed that in effect the line *f*—*e* is substantially tangent to the end of the initial curved portion with which it merges. The initial cutting section just described and also the final cutting section are each provided with a taper as *g*, whereby the desired continuous cutting edge is realized. This combined cutting section extends from near the point *c* around the outer portion of the knife marked *d*—*e* to the point *f*.

The initial cutting section which is substantially segmental or semi-circular is eccentrically arranged with relation to the axis of the knife and the final cutting section is substantially triangular and forms an extension of the outer end of the segmental initial cutting section.

An inspection of Fig. 6 will make it clear that a slab of bacon such as indicated by **20** with the lower section R lowermost, is engaged by the knife so as to first have a downward cutting and transverse drawing action in a side portion of the top of the fatty section of the bacon and that this type of cutting action continues until the knife blade is just about to engage and/or sever the lower section.

It will further be noted that at practically the period when the knife contacts with the lower side, it is engaging the lower section for the full width thereof and that the lower side is subjected to a combined slow but positive downward cutting and transverse drawing action for the full width thereof by the final cutting section of the blade. Applicant believes he is the first to produce any such cutting action. While this cutting action is useful in cutting various types of meat products, it is particularly useful in cutting bacon where the rind side or the lean side as the case may be presents a different cutting problem from that experienced elsewhere in the slab of bacon.

In the preferred form of the apparatus, this particular knife is used and there may also be used therewith a companion, transversely extending, lower member S at the extreme delivery end portion of the machine, which transversely extending member S is preferably vertically adjustable—it may be relied upon to support the bacon near its outermost part but slightly inside of the slice being cut—and this member S can also well be provided so as to constitute a lower shearing and resisting member which can be relied upon to cooperate with the oscillating shear previously described and shown in connection with Fig. 6. When this lower supporting shear section S is employed, it is preferably arranged so that it is in juxtaposition in respect to the final section of the knife when the knife is in the proper position for completing the severing of the bacon slice from the rest of the slab; that is, when the final section of the knife is in position to complete the cutting of the lower side of the slice that is being cut from the slab.

As previously indicated, it will be noted that in and during the normal operating of the apparatus, the final straight portion or final cutting section of the cutter or knife overtravels past the finish of the cutting operation, that is to say, past the lower supporting or lower shear member **5**, with the result that there is effected and insured a positive and clean cut severance of the final lower portion of the rest of the slab.

The supporting member S, which may function as a shear member if desired, is at least coextensive in length with the straight, final cutting face of the knife. In other words, it preferably extends transversely of the machine a length transversely equal to the final section of the knife; to wit, equal to *f*—*e*.

From what has preceded, it will be noted that the kinematic arrangements of the elements provide a combination of "drawing action" and "chopping action" and that by choosing the proper location of the knife axis O, with reference to the position of the bacon slab; that is, in reference to the support on which the slab is carried when being sliced, the ratio of drawing action to the chopping action can be set at any desired amount.

In Fig. 1, **20** represents the bacon slab in position for slicing. It is supported on fluted feed rollers **21** which are rotated in a direction to feed the bacon slab toward the slicing knife at the proper rate of speed. These rollers may be continuously rotated or they may be intermittently rotated as is provided for in the construction shown. These feed rollers **21** are driven by a long worm shaft **22**, the teeth of which mesh with the threads **23** cut on worm gears which are on the shafts **21***a* of the rollers **21**. The worm shaft **22** may be driven by a chain or any other convenient means from the main shaft **14**. In the construction shown, however, there is indicated an eccentric **32** secured to the main shaft **14**, and which eccentric is engaged by the eccentric strap member **33** so as to vertically reciprocate the connecting rod **34** and therethrough the free end **35** of pivoted feed lever member **36**.

The pivoted end **37** of the member **36** preferably carries pawl and ratchet mechanism, such as provided by pawl **37** and ratchet wheel **38**, the former of which is located on the lever, and the latter of which is located on the shaft **22** so as to effect an intermittent driving of the shaft and the desired feed of the rollers. The connecting rod **34** may be provided with adjusting nuts thereupon whereby there may be realized a lost motion connection between the connecting rod **34** on the one hand and the free end **35** of the pivoted member **36** on the other hand, with the result that an adjustable and controllable feed can be imparted to the feed rollers in respect to the continuously moving main shaft **14** and thereby indirectly in respect to the cycle movements of the knife.

The machine has been designed primarily for operation with the bed inclined at a substantial angle but it will be noted that according to the broader aspects of the invention it is not limited to a machine in which the bed is so inclined. However, there is a decided advantage in inclining the machine in the manner shown and described as has been proven from the actual operation of machines of this character.

In the machine as shown, each bacon slab **20** is successively pressed against the fluted feed

rollers 21 by the action of loaded or spring pressed rollers 24. The pressing rollers 24 are supported at each end or in other words, are held in position by suitable bearing blocks 25, which blocks are in turn supported or held in position by rods 26 passing upwardly through lower and upper longitudinally extending frame members 27 and 28 which are in turn secured to and held in place by the rigid upright supports, as 2 and 3. Collars 29 are rigidly secured to the rods 26 and are arranged to transmit downward pressure of springs 30 to the pressing rollers 24.

The cutting end of the machine is herein referred to as the forward end of the machine. The end where the bacon first enters the machine is herein referred to as the rear end of the machine. The rollers 31 provide a guiding-in set of rollers which are located behind the spring pressed feed rollers 24. The guiding-in feed rollers 31 are held in a fixed position on and in respect to the machine and are not spring loaded. The guiding-in rollers are also located above and in cooperative relationship with respect to some of the fluted feed rollers 21. The purpose of the guiding-in rollers is, as the name implies, to guide and gradually force the incoming strips of bacon into positive engagement with the lower fluted feed rollers 21 and having served this purpose, then the best results are obtained by also providing the upper set of spring pressed rollers 24, previously described.

When the machine is set in an inclined position, a bacon slab delivered into the machine, along the path indicated by the arrow, will be carried by gravity under the guiding-in rollers 31 until it is firmly wedged between the fluted feed members 21 and the pressing rollers 24 by means of the latter of which it will be carried continuously and uniformly into the slicing knife or in other words in position to be operated upon by the slicing knife. With this arrangement, the extreme ends of the bacon slab will be carried under the knife by the action of the rollers 21 and 24 and the pressure of the adjacent bacon slab.

In this arrangement, it will also be observed that as the knife starts to sever the slice of bacon from the slab, the bacon can lean over and tend to drop under the influence of gravity and that it is in position to drop practically along a defined path onto the receiving and conveying mechanism indicated by M below the cutting-off or delivery end of the machine so that the slices of bacon can collect in batches as shown in Figure 1.

What is claimed is:

1. A bacon slicing machine of the class described, comprising a frame having a longitudinally extending bed, fluted feed rollers mounted thereupon extending transversely of the bed and provided with means for driving the fluted feed rollers in a direction to move forwardly slabs of bacon when supported thereupon, spring pressed rollers for forcing the slabs of bacon toward the feed rollers, a motor carried by the frame, a main operating shaft driven from the motor so as to be continuously rotated thereby, which main operating shaft is carried by bearings suitably mounted on the frame, a longitudinally extending cutter shaft, means for imparting oscillating movements from the driving shaft to the cutter shaft, a cutter fixedly secured to the said cutting shaft, said cutter having a gradually increasing initial cutting section for initially engaging the bacon in the top section thereof when supported on the body with the supported section down and a final cutting section for ultimately passing through the main body of the bacon and lastly completely through and slightly past the supported section thereof, which final cutting section has a straight cutting edge arranged for simultaneously severing the supported section for the full width thereof.

2. A bacon slicing machine of the class described, comprising a frame having a longitudinally extending bed, fluted feed rollers mounted upon the bed and extending transversely thereof and provided with means for driving them in a direction to move forwardly the slabs of bacon supported thereupon, spring pressed pressing rollers for forcing the slabs of bacon toward the feed rollers, a motor carried by the frame, a main operating shaft driven from the motor, which main operating shaft is carried by bearings suitably mounted on the frame, a longitudinally extending cutter shaft, means for imparting oscillating movement to the cutting shaft from the driving shaft, a cutter fixedly secured to the said cutting shaft, said cutter having a gradually increasing formation for initially engaging the bacon in the top section thereof when supported on the bed arranged to initially pass through the main body of the bacon and lastly through and slightly past the supported section of the bacon, which cutter has a final, straight cutting edge arranged so that it provides a portion which simultaneously severs the supported section for the full width thereof, and which final straight cutting edge is positioned and arranged so that it overtravels slightly past the position at which the severing operation is completed.

3. A bacon slicing machine of the class described, comprising a longitudinally extending bed, fluted feed rollers mounted thereupon extending transversely of the bed and provided with means for driving the fluted feed rollers in a direction to forwardly move slabs of bacon supported thereupon, spring pressed pressing rollers for forcing the slabs of bacon toward the feed rollers, a set of transversely extending guiding-in rollers arranged in the rear of the pressing rollers for the purpose of directing the forwardly moving slabs of bacon into position to be pressed by the spring pressed rollers into feeding engagement with the fluted feed rollers, a motor carried by the frame of the machine, a continuously turning main operating shaft driven from the motor, which main operating shaft is carried by bearings suitably mounted on the frame of the machine, a longitudinally extending cutter shaft, means for imparting angular oscillating movement to the cutter shaft from the driving shaft, a cutter fixedly secured to the said oscillating cutter shaft, and means driven by said main operating shaft for actuating the means for driving the fluted feed rollers.

4. An angularly movable transversely operating knife for use in a slicing machine having a suitable supporting table which is relatively straight in a transverse direction in the region in which the knife operates, a traveling receiving element arranged to receive meat slices from said knife, said knife having a small body portion for approximately 180 degrees and through which body portion there extends the longitudinally extending axis about which the knife has angular movement, an initial cutting portion having a gradually increasing radius for the next 135 degrees and a final cutting section which is straight for the

remaining 45 degrees and which relatively straight cutting section extends at a tangent from the initial cutting portion, thereby enabling each slice to be deposited on the aforesaid receiving element while the velocity of the knife is at substantially zero in its cutting stroke in order better to control the distribution of the individual slices on the receiving element.

5. In a meat slicing machine, a frame, a knife, a shaft journalled in the frame and to which the knife is operatively connected, means for slidably supporting a meat slab on the frame for movement toward the knife including transversely disposed rollers, spring actuated presser rollers for yieldably forcing the meat slab on the rollers of said supporting means, a set of guide rollers flared away from the feeding rollers to cooperate with the latter to direct the slab of meat between the feeding rollers and the presser rollers, a drive shaft journalled in the frame in parallelism with the knife shaft, a motor on the frame, driving means between the motor shaft and the drive shaft to continuously rotate the drive shaft, connections between the knife shaft and the drive shaft to periodically oscillate said knife shaft, and means for intermittently rotating the aforesaid rollers to feed the material to the knife between oscillating movements of the latter for positioning the meat with relation to the knife for slicing purposes.

6. Means for supporting a slab of meat to be fed to a slicing mechanism, including a bed of alining side by side rollers, a worm gear on the axis of each roller, a worm shaft meshing with the worm gears of the rollers, means for rotating the worm shaft, means for effecting intermittent rotation of the worm shaft to intermittently rotate the rollers to intermittently feed the slab of material to the slicing mechanism, and means including rollers for exerting a yieldable pressure upon the slab to force the latter yieldably into feeding contact with said rollers.

7. In a meat slicing machine, means for feeding a slab of meat to a cutting means comprising a supporting means including side by side feed rollers to feed the slab to the cutting means, means for intermittently rotating said rollers in unison including a worm gear mechanism and a pawl and ratchet mechanism, pressure means above the slab of meat to force the meat into intimate feeding contact with said rollers, and a set of guiding rollers flared away from the feeding rollers to cooperate with the latter to direct the slab of meat between the feeding rollers and the presser means.

8. In a meat slicing machine, a conveyor, an inclined frame having its lower end arranged at an acute angle to the conveyor and close thereto, a knife operating in parallelism with the lower end of the frame, an inclined feeding means including rollers on the frame to feed a meat slab to the knife, means for operating the knife to periodically cut slices from the slab, and means to rotate said feed rollers intermittently in unison to feed the meat slab to cutting position during inactive cutting periods of the knife, the meat slices falling by gravity from the portion of the inclined frame nearest to the conveyor into overlapping relation on the conveyor.

9. In a slicing machine including a feed table and means for progressively moving slabs of meat in a forwardly direction on said table, a pivotally mounted knife and means for successively imparting oscillating movements to said knife in a cutting and shearing relationship with meat slabs fed to the forward end of said table, said knife having an initial substantially circular cutting edge, the center of which is offset from said knife pivot to provide gradually increasing radii in relation to said knife pivot, said circular portion terminating in a substantially straight portion of a length greater than the width of the meat slabs being cut, the position of said knife pivot being such that said straight portion at the completion of each downward oscillating movement will rest in a plane below the feeding level of said table.

10. In a slicing machine including a feed table and means for progressively moving slabs of meat in a forwardly direction on said table, a pivotally mounted knife and means for successively imparting oscillating movements to said knife in a cutting and shearing relationship with meat slabs fed to the forward end of said table, said knife having an initial substantially circular cutting edge, the center of which is offset from said knife pivot to provide gradually increasing radii in relation to said knife pivot, said circular portion terminating in a substantially straight portion of a length greater than the width of the meat slabs being cut, the position of said knife pivot being such that said straight portion at the completion of each downward oscillating movement will rest in a plane below the feeding level of said table, said circular portion providing a progressively quickening cutting movement during the early stages of the cutting operation followed by said straight portion providing a progressively decreasing cutting movement so that only a slow cutting movement exists approaching the end of the cutting operation.

11. In a slicing machine including a feed table and means for progressively moving slabs of meat in a forwardly direction on said table, a pivotally mounted knife and means for successively imparting oscillating movements to said knife in a cutting and shearing relationship with meat slabs fed to the forward end of said table, said knife having an initial substantially circular cutting edge, the center of which is offset from said knife pivot to provide gradually increasing radii in relation to said knife pivot, said circular portion terminating in a substantially straight portion of a length greater than the width of the meat slabs being cut, the position of said knife pivot being such that said straight portion at the completion of each downward oscillating movement will rest in a plane below the feeding level of said table, said circular portion providing a progressively quickening cutting movement during the early stages of the cutting operation followed by said straight portion providing a progressively decreasing cutting movement so that only a slow cutting movement exists approaching the end of the cutting operation, said straight portion as it approaches the lower edge of the slab being cut providing a transverse drawing and shearing action for completely severing the slice being cut.

12. In a meat slicing machine, a pivotally mounted knife and means for successively imparting oscillating movements to said knife, said knife having an initial substantially circular cutting edge, the center of which is offset from said knife pivot to provide gradually increasing radii in relation to said knife pivot, said circular portion terminating in a substantially straight portion of a length greater than the product to be sliced by said knife, said straight portion being substantially at right angle to the radius at the

terminus of the circular portion, said circular portion of said cutting edge upon engagement with the product to be sliced providing a progressively quickening cutting movement during the early stages of the cutting operation followed by said straight portion providing a progressively decreasing cutting movement so that only a slow cutting movement exists approaching the end of the cutting operation.

13. In a meat slicing machine, a pivotally mounted knife and means for successively imparting oscillating movements to said knife, said knife having an initial substantially circular cutting edge, the center of which is offset from said knife pivot to provide gradually increasing radii in relation to said knife pivot, said circular portion terminating in a substantially straight portion of a length greater than the product to be sliced by said knife, said straight portion being substantially at right angle to the radius at the terminus of the circular portion, said circular portion of said cutting edge upon engagement with the product to be sliced providing a progressively quickening cutting movement during the early stages of the cutting operation followed by said straight portion providing a progressively decreasing cutting movement so that only a slow cutting movement exists approaching the end of the cutting operation, said straight portion as it approaches the lower edge of the product being sliced providing a transverse shearing action for completely severing the slice being cut.

CHARLES T. WALTER.

CERTIFICATE OF CORRECTION.

Patent No. 2,036,001. March 31 1936.

CHARLES T. WALTER.

It is hereby certified that error appears in the printed specification of the above numbered patent requiring correction as follows: Page 4, second column, line 18, claim 2, after "shaft" insert rotatably; and that the said Letters Patent should be read with this correction therein that the same may conform to the record of the case in the Patent Office.

Signed and sealed this 28th day April, A. D. 1936.

Leslie Frazer

(Seal) Acting Commissioner of Patents.