Sept. 29, 1931. C. ROESCH 1,825,421

SLICING MACHINE

Filed April 13, 1929 3 Sheets-Sheet 1

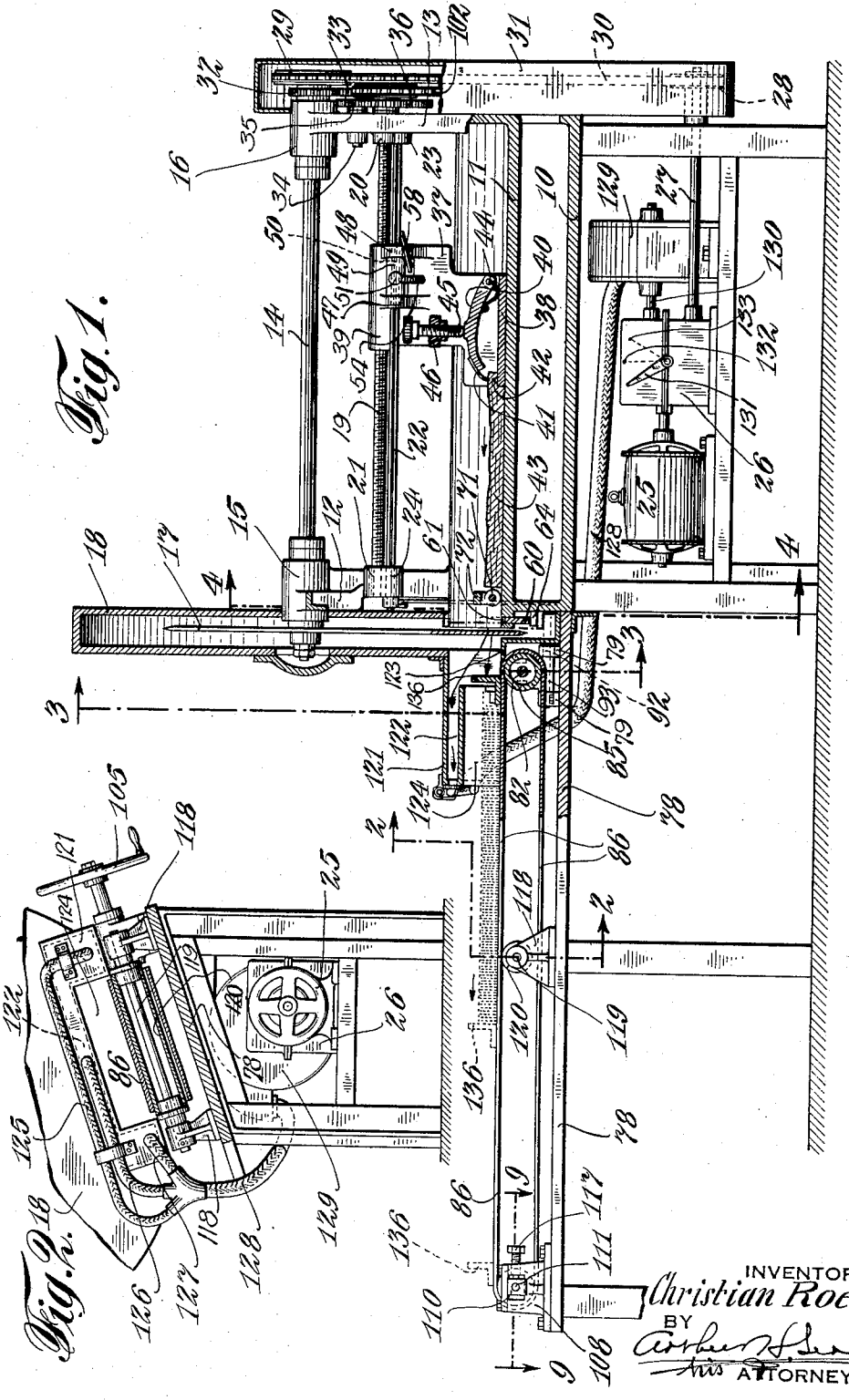

Fig. 1.

Fig. 2.

INVENTOR
Christian Roesch
BY
Arthur H. Sewell
his ATTORNEY

Sept. 29, 1931. C. ROESCH 1,825,421

SLICING MACHINE

Filed April 13, 1929 3 Sheets-Sheet 2

Fig. 3.

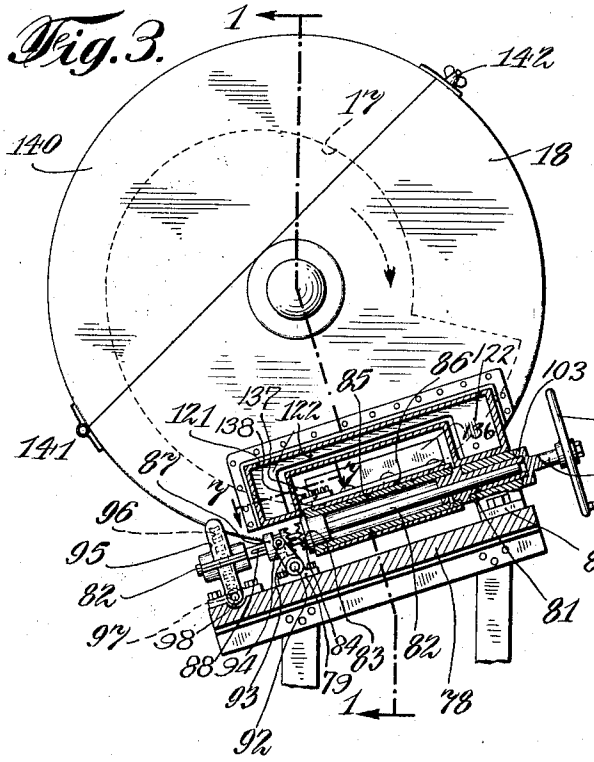

Fig. 4.

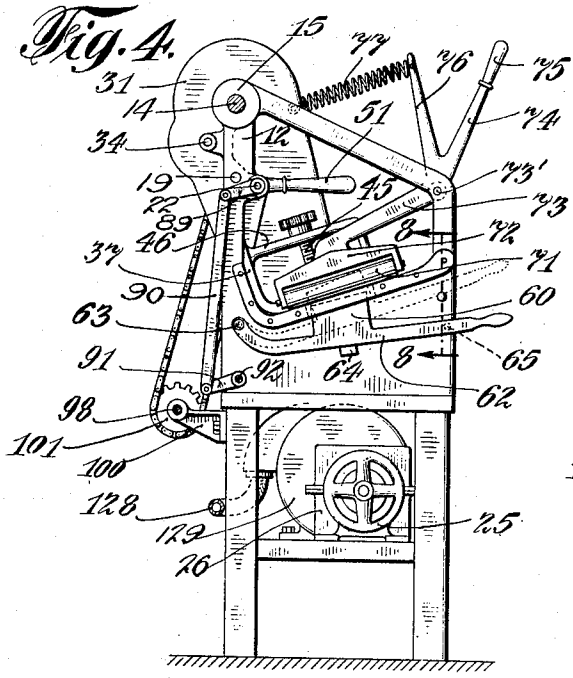

Fig. 7.

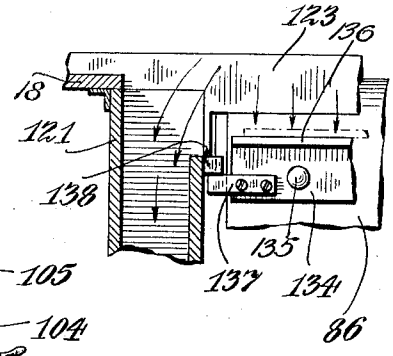

Fig. 8.

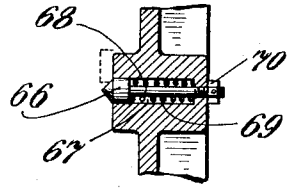

Fig. 9.

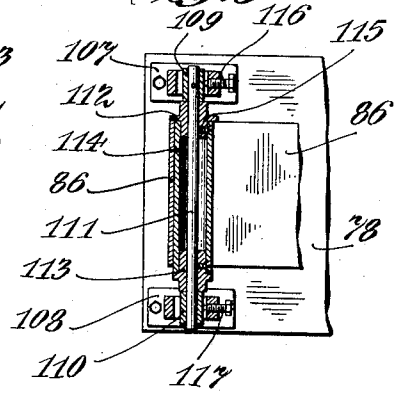

INVENTOR
Christian Roesch
BY
Arthur H. Sewell
his ATTORNEY

Sept. 29, 1931. C. ROESCH 1,825,421

SLICING MACHINE

Filed April 13, 1929 3 Sheets-Sheet 3

Fig. 6.

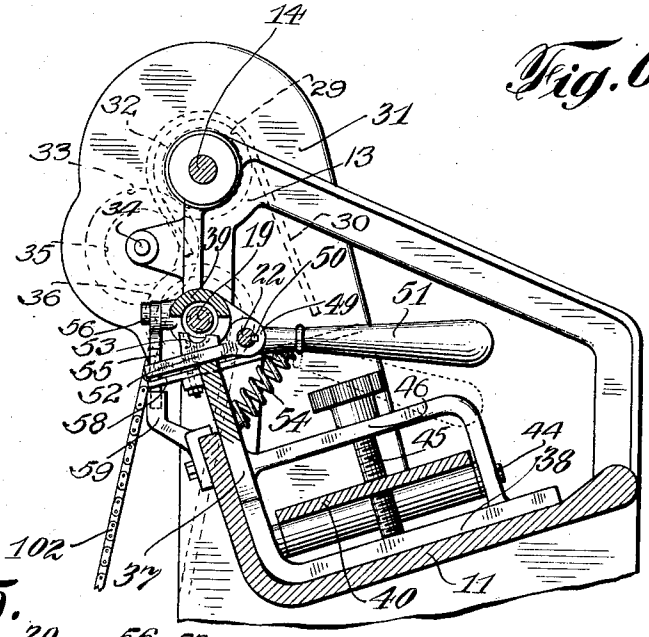

Fig. 5.

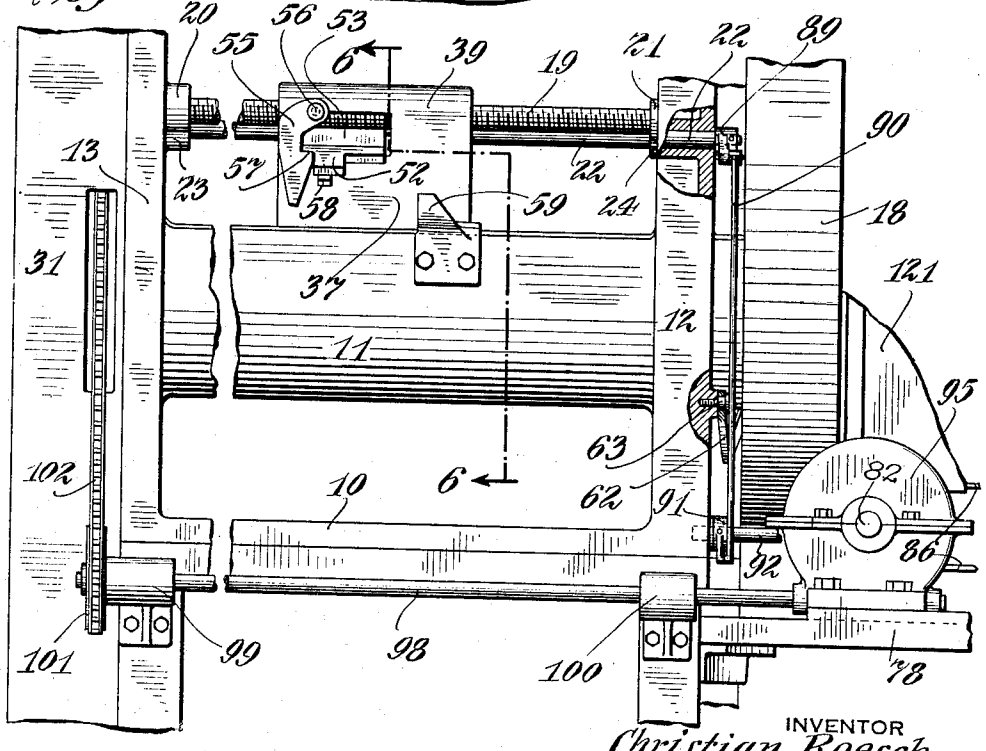

INVENTOR
Christian Roesch
BY
Arthur H. Sewall
his ATTORNEY

Patented Sept. 29, 1931 1,825,421

UNITED STATES PATENT OFFICE

CHRISTIAN ROESCH, OF BROOKLYN, NEW YORK, ASSIGNOR OF ONE-HALF TO HIMSELF AND ONE-HALF TO GEORGE GOCKELER, OF BROOKLYN, NEW YORK

SLICING MACHINE

Application filed April 13, 1929. Serial No. 354,758.

This invention relates to a slicing machine of the type particularly adapted to cut into slices various edible materials such as bacon, ham, tongue, cheese, or bread, or other material which is customarily cut into slices for use. I am aware that heretofore various types of slicing machines have been designed for like purposes. These machines have been constructed to include a rotary knife, devices for clamping and feeding the material to be sliced, together with suitable means for operating the same. However, in all types of such machines so far as the same have come to my knowledge there has been more or less difficulty and inconvenience in handling the slices of material after being cut by the machine. In most of these machines the slices as cut are delivered promiscuously and it is necessary to gather them by hand and rearrange them for purposes of convenience or use.

The object of my invention primarily is to overcome this difficulty and inconvenience. In so doing in carrying out the invention I employ a conveyor or carrier to and upon which the slices of material are delivered and placed in the same order and in substantially the same position they assumed in the material before being cut, whereby the slices are assembled and arranged in such a manner that they may be taken as a unit from the conveyor and either stored or easily separated for use.

In carrying out the invention the apparatus includes a knife or other cutting device, a carriage for gripping and feeding the material to be sliced and means for operating the same, together with a conveyor for receiving the slices of material, and means for simultaneously connecting and disconnecting the feed carriage and conveyor whereby they are caused to move synchronously when in operation. The apparatus made in accordance with this invention also includes suitable devices for placing the material to be sliced in a predetermined position before the slicing operation begins and for holding the material to be sliced in place in the machine, and auxiliary devices for insuring or assisting the slices of material as cut to position on the conveyor, all of which will be hereinafter more particularly described.

In the drawings Figure 1 is a longitudinal section and partial elevation of a slicing machine embodying my present invention taken on line 1—1, Fig. 3,

Fig. 2 is a section and partial elevation taken on line 2—2, Fig. 1,

Fig. 3 is a section and partial elevation taken on line 3—3, Fig. 1,

Fig. 4 is a sectional elevation on line 4—4, Fig. 1,

Fig. 5 is a sectional elevation on an enlarged scale showing the rear of the machine,

Fig. 6 is a sectional elevation on line 6—6, Fig. 5,

Fig. 7 is a sectional plan on line 7—7, Fig. 3,

Fig. 8 is a section on line 8—8, Fig. 4, and

Fig. 9 is a sectional plan on line 9—9, Fig. 1.

It will be seen that in carrying out the invention the body of the machine may be constructed to include a base 10 having an inclined angular wall 11 extending between and connected to end frame members 12 and 13. The angular frame is adapted to function as a base and slide for a feed carriage and the material to be sliced, as will be hereinafter more particularly described. A knife shaft 14 is suitably journaled in and extends between bearings 15 and 16 provided therefor in the end frame members 12 and 13 and mounted on this shaft 14 there is a knife 17. The knife 17 may be of any desired type, but as illustrated is preferably of the volute type as commonly employed in machines of this character. The knife 17 is preferably housed in a casing 18 which acts as a shield preventing the operator from getting into contact with the cutting edge thereof in normally operating the machine. A feed shaft 19, which is preferably screw threaded as indicated in the drawings, is also mounted in suitable bearings 20 and 21 provided therefor in the end frame members 12 and 13. Similarly mounted and adjacent the feed shaft there is a rocker shaft 22. The bearings

in which this rocker shaft is journaled are indicated at 23 and 24.

The apparatus is preferably power driven although, of course, the invention is not so limited. As illustrated, however, the apparatus includes a motor 25 connected to a gear shift apparatus 26 for turning a drive shaft 27. The motor and the gear shift apparatus are preferably mounted in any desired manner and on supports provided therefor beneath the base 10 forming part of the frame of the machine. At the outer end of the drive shaft 27 there is a sprocket 28. Passing over this sprocket 28 and also over a sprocket 29 on the knife shaft 14 there is a chain 30.

Of course, the drive shaft may be connected to the knife shaft in this or any similar manner and these parts are preferably enclosed in a suitable gear casing 31. Mounted on the knife shaft there is a gear 32. This gear 32 meshes with a gear 33 mounted on an intermediate shaft 34 on which there is also a gear 35. This gear 35 meshes with a gear 36 suitably mounted on the end of the feed shaft 19. These gears, as will be understood, form a reduction train and are so designed as to produce the necessary or desired difference in speed between the knife shaft and the feed shaft. Furthermore, this gear train is also enclosed in the gear casing 31.

Associated with the feed shaft 19 and the inclined angular wall 11 there is a carriage 37. The base 38 of the carriage is adapted to fit and move on the upper surface of the wall 11 and at its upper end the carriage is constructed to include a sleeve 39 which fits over the feed shaft 19. There is also an arm 40 carrying a gripper device 41, or a series of such gripper devices, which coact with a corresponding number of teeth or projections 42 on the base 38 of the carriage for engaging the end or edge portion of a piece of bacon 43, or other material to be sliced. As illustrated in Fig. 1 the major portion of the bacon or material to be sliced is supported on the surface of the wall 11 on which it slides as it is moved in being fed, as hereinafter described. The arm 40 is pivotally mounted at one end, as indicated at 44, between lugs provided for this purpose on the carriage. The arm 40 is adjusted to position by means of a screw 45 which is swiveled in a boss 46 projecting from the body of the carriage thereby causing the gripping devices to clamp the material to be sliced.

On the forward or front face of the carriage the same is provided with spaced lugs 47 and 48 with openings through which the rocker shaft 22 passes and is journaled. Mounted on the rocker shaft between the lugs 47 and 48 there is a sleeve 49. Suitably fitted in the rocker shaft there is a key 50 which extends into a groove provided for this purpose in the sleeve 49 whereby, as will be understood, the sleeve 49 and the rocker shaft may have imparted thereto a partial revolution by means of a handle 51, or any equivalent device, extending from the sleeve 49. On the side opposite the handle and passing through an aperture provided therefor in the wall of the carriage there is a lever 52 to which there is suitably connected a clutch socket 53 adapted to be moved into contact with and to engage the screw threads of the feed shaft 19. The handle 51 and the lever 52 with its clutch socket 53 are normally maintained in the position shown in Fig. 6 in which the clutch socket is out of engagement with the screw threaded feed shaft by means of a spring 54 or other similar yielding device. In causing the clutch socket to engage the screw threaded feed shaft the handle 51 is depressed against the action of the spring 54 until the engagement is effected when a latch member 55 pivotally connected to the carriage, as indicated at 56, swings into engagement with a shoulder 57 provided for this purpose on the underside of the lever 52, whereby, as will be understood, these parts are maintained in the position in which the clutch socket is in engagement with the screw threads of the feed shaft. The parts may be manually released by means of a trip lever 58 pivotally connected to the carriage frame and having its forward end extending to the front of the machine and its rearward end when swung adapted to engage the latch member 55 to swing the same so as to disengage it from the shoulder 57. This disengagement of these parts may be automatically effected after the carriage has traveled a predetermined distance by means of a trip finger 59 secured to the wall 11, adjustably or otherwise, and by means of which after the carriage has moved the intended distance this finger comes into contact with the latch member 55, permits the release of the parts and causes the spring 54 to return the same to the position shown in Fig. 6 in which, as will be understood, the clutch socket is free from the feed shaft and the movement of the carriage will cease. Obviously also when the clutch socket is free from the feed shaft the carriage and associated parts may be caused manually or otherwise to slide to any desired position along the feed shaft 19 and the rocker shaft 22.

The apparatus also includes a positioning plate 60 adapted to extend through a slot 61 in the frame of the machine and carried by a lever 62 which is pivotally mounted at 63 in the machine frame and normally supported by a stop lug 64. In a position adjacent its outer end the lever 62 may be provided with a recess 65 in one side there-

of. This lever may be raised to cause the positioning plate 60 to pass through the slot 61 so as to extend above the inclined angular wall 11. This is clearly indicated in Fig. 4 of the drawing. When in its raised position the lever 62 may be supported by the end of a button 66 which may engage within the recess 65 or may engage under the lower edge of this lever when raised, as indicated in Fig. 8. Also as shown in Fig. 8 the button 66 is adapted to operate in a bore 67 in the frame of the machine and has a pin 68 extending through the bore and through an opening provided therefor in the machine frame, there being a spring 69 surrounding the pin and extending from the base of the bore to the inner face of the button. Exteriorly of the machine frame the pin 68 is fitted with a nut 70 or other means for determining the normal position thereof. Obviously in raising or lowering the lever the button 66 is depressed against the action of the spring which normally maintains the button in the position shown in Fig. 8 and is sufficiently tensioned to support the lever in its raised position whether the button engages in the recess 65 or against the lower edge of the lever.

The apparatus furthermore includes a roller 71 pivotally mounted in a yoke 72 which is carried by a lever arm 73. The lever arm is pivotally mounted in the machine frame as indicated at 73′ and is provided with a lever arm extension 74 and a handle 75, together with an arm 76, which latter is connected to the machine frame by a spring 77. Obviously the spring 77 normally maintains the roller against the surface of the inclined wall 11 and the roller may be raised to permit the passage of the bacon, or other material to be cut, beneath the same. It will now be understood that in placing in the machine the piece of material to be cut one end thereof, as indicated in Fig. 1, is engaged by the grippers 41 and 42. Thereupon the carriage is shifted in the direction of the opposite end of the material 43 which is placed against the roller 71, whereupon the roller is raised and after the lever 62 has been lifted to extend the positioning plate 60 above the slot 61 the carriage is further shifted to the left, as viewed in Fig. 1 to bring this end of the material 43 against the positioning plate 60, which is designed to bring the material into a proper position for the beginning of the slicing operations.

As will be understood before the slicing operations are begun the positioning plate is lowered and the roller released, which latter then functions to maintain the material 43 against the face of the inclined wall 11 which acts as a slide as the material is fed forward by the carriage to successive positions to have slices cut therefrom by the knife 17.

In carrying out the invention there is also included a suitable conveyor upon which as the slices of the material are cut therefrom they are transferred and positioned. To this end the apparatus also includes a support plate 78 which is carried by and connected to the frame of the machine in any desired manner. At the end of this support plate adjacent the parts of the apparatus hereinbefore described there are bearings 79 and 80. Mounted to turn in the bearing 80 there is a sleeve 81. Journaled in the sleeve 81 there is one end of a shaft 82. Loose on the shaft 82 and spaced from the sleeve 81 there is a flanged collar 83 which may be connected and disconnected to and from the shaft in any suitable manner. The flanged collar has associated therewith a clutch member 84. The flanged collar 83 and the adjacent end of the sleeve 81 form hubs for a pulley 85 passing over which there is a conveyor belt 86. Mounted on the shaft 82 adjacent the clutch member 84 there is a clutch member 87. This clutch member 87 is slidable on the shaft and is made to turn therewith by means of a key 88 or otherwise. As shown in Fig. 4 one end of the rocker shaft 22 is provided with a crank arm 89. The free end of this crank arm 89 is pivotally connected to one end of a link 90, the opposite end of which is pivotally connected to the free end of a crank arm 91. The crank arm 91 is suitably fixed on a shaft 92 which is journaled in the bearing member 79.

Carried by the shaft 92 there is a crank arm 93 which at its free end is provided with a pin 94 which engages in a circumferential slot provided for this purpose in the clutch member 87. By this structure, as will be understood, when the rocker shaft 22 is depressed to cause the clutch socket 53 to engage the screw threads of the feed shaft this movement of the rocker shaft swings the crank arm 89 in a clockwise direction, as viewed in Fig. 4, thereby shifting the link 90 and the crank arm 91, swinging the shaft 92 in a like direction to thereby move the clutch member 87 along the shaft 82 into engagement with the clutch member 84 on the flanged collar 83. Obviously also when the handle 51 is released the action of the spring 54 causes the rocker shaft to turn a partial revolution in the opposite direction thereby not only releasing the clutch socket 53 from the screw threads of the feed shaft but also depressing the crank arms 89 and 91 and thereby shifting the clutch member 87 along the shaft in the opposite direction to cause the same to be disengaged from the clutch member 84.

Suitably mounted on the support plate 78 there is a gear case 95 in bearings in which

one end of the shaft 82 is journaled. Mounted on the shaft within the gear case there is a worm gear 96. This worm gear 96 meshes with a worm 97 on a shaft 98. The shaft 98 is journaled in bearings 99 and 100 mounted on brackets, or otherwise, and carries a sprocket 101 over which a chain 102 passes. This chain 102 also passes over a sprocket provided therefor on the end of the feed shaft 19 whereby, as will be understood the shaft 82 is driven from the feed shaft. Moreover, it will also be understood that when the carriage is connected to the feed shaft by the operation of the handle and parts associated therewith, as hereinbefore described, the clutch members 84 and 87 will also be connected so as to simultaneously drive the conveyor belt 86. The parts are so designed that the conveyor belt 86 travels at substantially the same rate of speed as the carriage 37.

Connected to the outer end of the sleeve 81 by screw threads or otherwise there is a coupling 103 connecting the sleeve to a shaft 104 in alignment with the shaft 82 and on which there is mounted a wheel 105 adapted to be turned by means of a handle 106 or otherwise. By this construction, as will now be understood, when the shaft 82 is turned and the clutch members 84 and 87 separated the conveyor belt 86 remains stationary. When, however, the clutch members 84 and 87 are connected and the shaft 82 is turned the pulley 85 is also turned through its connection with the flanged collar 83, the end of the pulley 85 opposite the flanged collar turning with the inner end of the sleeve 81. When, however, the clutch members 84 and 87 are disconnected the pulley 85 may be turned in the opposite direction by means of the sleeve 81 and the hand wheel 105 to move the conveyor belt in the opposite direction and set the same in a desired position.

At the outer end of the support plate 78 there are bearing blocks 107 and 108. Mounted in these bearing blocks there are bearings 109 and 110 in which there is journaled a shaft 111. Mounted on this shaft 111 there are flanged hubs 112 and 113 mounted on which there is a pulley 114. The pulley 114 is secured to the hubs and these parts maintained in position on the shaft by means of set screws 115 or otherwise. The conveyor belt 86 also passes over the pulley 114. The bearings 109 and 110 are adjustably positioned in the bearing blocks by means of adjusting screws 116 and 117 or otherwise to vary the tension on the conveyor belt, as will be understood. On the support plate 78 there may also be intermediate bearing blocks 118 in the parts of which there is journaled a shaft 119 carrying an idler pulley 120 for supporting the conveyor belt intermediate of its ends.

Associated with the delivery end of the slicing apparatus I employ a suction box 121 having a suction chamber 122 therein. This suction box is suitably connected to the frame of the machine and includes an angular wall 123 the upright part of which lies adjacent the knife when making the cut and the other portion of which is parallel to the slide surface of the wall 11 and forms a floor which is a substantial continuation thereof. The floor portion of the angular wall projects over a portion of the conveyor as the same passes over the pulley 85, as is shown in Fig. 1 of the drawings. The suction box is constructed to include a centrally disposed passage 124 through which the conveyor travels. Extending from the outer end of the suction box and leading from spaced positions there are pipes 125, 126 and 127 all connected to a suction pipe 128 leading from a blower or exhauster 129, the shaft 130 of which is driven from the gears in the gear shift apparatus 26. This gear shift apparatus is operated by a lever 131 or otherwise. When the lever is in the position shown in Fig. 1 the gears are inoperative or neutral and when in the position indicated at 132 the gears are thrown in to connect the drive shaft 27, whereas when the lever 131 is in the position indicated at 133 the gears are connected to turn both the drive shaft 27 and the exhauster shaft 130 whereby, as will be understood, the apparatus may be employed with or without the suction devices.

A positioning plate 134 is suitably connected to the conveyor 86 by means of rivets 135 or otherwise. As illustrated this positioning plate is an angle extending transversely of the conveyor. The positioning plate, therefore, includes a wall 136 extending at right angles from the conveyor and is adapted to function as a stop or abutment for positioning the slices as the same are cut from the material to be sliced. The positioning plate 134 is fitted with a finger 137 projecting from one end thereof and adapted to contact with a stop 138 suitably connected to and extending from the inner face of one of the walls of the suction box, as indicated in Fig. 7. The suction apparatus as described is employed to move, or assist in moving, the slices of the material as they are cut and to thereby carry the same in an upright position to the conveyor. As indicated in the drawings the knife shield or casing 18 may be divided and the upper portion 140 thereof hinged, as indicated at 141, to the lower portion thereof and normally maintained in a closed position by means of a suitable clamp and nut, as shown at 142.

It will be understood that while the slicer machine as herein shown and described is power operated it may be so constructed as to be manually operated and that while

as designed the devices for connecting and disconnecting the feed carriage and the conveyor belt are simultaneously operated and mounted in the frame of the machine these parts may be otherwise so constructed as to be operative in instances where the conveyor belt and the suction apparatus are merely added to slicer machines as heretofore constructed, and this without departing from the nature and spirit of the invention.

I claim as my invention:

1. In a slicing machine, a cutter, a carriage, a feed shaft, means for simultaneously actuating the cutter and feed shaft, a conveyor, a conveyor shaft, means mounted loosely on the conveyor shaft and over which the said conveyor passes, means for driving the conveyor shaft from the feed shaft, and means for simultaneously connecting and disconnecting the carriage to the feed shaft and connecting and disconnecting the conveyor shaft to and from the means thereon for moving the conveyor.

2. In a slicing machine, a cutter, a cutter shaft, a carriage, a feed shaft for advancing the carriage toward the cutter, means for driving the cutter shaft and the feed shaft, a conveyor, a conveyor shaft, a pulley mounted to turn on the conveyor shaft and by which the conveyor is driven, means for driving the conveyor shaft from the feed shaft, and means for simultaneously connecting and disconnecting the carriage to the feed shaft and connecting and disconnecting the said conveyor shaft to the said pulley thereon.

3. In a slicing machine, a cutter, a cutter shaft, a carriage, a feed shaft for advancing the carriage toward the cutter, a conveyor, a conveyor shaft, a pulley mounted to turn on the conveyor shaft and by which the conveyor is driven, and means for driving the conveyor shaft, a clutch for connecting and disconnecting the conveyor shaft to and from the said pulley, and means for simultaneously connecting and disconnecting the carriage to and from the feed shaft and actuating the clutch on the conveyor shaft to connect and disconnect the same to and from the said pulley thereon.

4. In a slicing machine, a cutter, a cutter shaft, a carriage, a feed shaft for advancing the carriage toward the cutter, a conveyor, a conveyor shaft, a pulley mounted to turn on the conveyor shaft and by which the conveyor is driven, means for driving the conveyor shaft, a clutch for connecting and disconnecting the conveyor shaft to and from the said pulley, means for simultaneously connecting and disconnecting the carriage to and from the feed shaft and actuating the clutch on the conveyor shaft to connect and disconnect the same to and from the said pulley thereon for driving the said conveyor in one direction, and means operative when the clutch and pulley on the conveyor shaft are disconnected for moving the conveyor in the opposite direction.

5. In a slicing machine, a cutter, a cutter shaft, a carriage, a feed shaft for advancing the carriage toward the cutter, means for driving the cutter shaft and feed shaft, a rocker shaft on which the said carriage is slidable, a conveyor, a conveyor shaft, a pulley mounted to turn in the conveyor shaft and by which the conveyor is driven, means for driving the conveyor shaft, a clutch on the conveyor shaft for connecting and disconnecting the same to and from the said pulley, a device for connecting the carriage to the said feed shaft, and means for actuating the rocker shaft to simultaneously cause the said device to engage the feed shaft and to operate the said clutch on the conveyor shaft to cause the same to connect the conveyor shaft to the said pulley thereon.

6. In a slicing machine, a cutter, a cutter shaft, a carriage, a feed shaft for advancing the carriage toward the cutter, means for driving the said cutter shaft and feed shaft, a rocker shaft on which the said carriage is slidable, a clutch socket operated by the rocker shaft for connecting and disconnecting the said clutch socket to and from the feed shaft, a conveyor, a conveyor shaft, a pulley mounted to turn on the conveyor shaft and by which the said conveyor is driven, means for driving the conveyor shaft, a clutch on the conveyor shaft for connecting and disconnecting the same to and from the said pulley, and means operated by the rocker shaft for actuating the clutch on the conveyor shaft causing the same to be connected and disconnected to and from the said pulley.

7. In a slicing machine, a cutter, a cutter shaft, a carriage, a feed shaft for advancing the carriage toward the cutter, means for driving the said cutter shaft and feed shaft, a rocker shaft on which the said carriage is slidable, a clutch socket operated by the rocker shaft for connecting and disconnecting the said clutch socket to and from the feed shaft, a conveyor, a conveyor shaft, a pulley mounted to turn on the conveyor shaft and by which the said conveyor is driven, means for driving the conveyor shaft, a clutch on the conveyor shaft for connecting and disconnecting the same to and from the said pulley, means operated by the rocker shaft for actuating the clutch on the conveyor shaft causing the same to be connected and disconnected to and from the said pulley, means for normally maintaining the clutch socket in a position in which it is disconnected from the feed shaft and the said clutch in a position in which it is disconnected from the said pulley, means for maintaining the clutch socket in the position in which it is engaged with the feed

shaft and the said clutch and in the position in which it is engaged with the said pulley during the movement of the carriage and the conveyor, and means for releasing the aforesaid means to cause the disengagement of the clutch socket from the feed shaft and the clutch on the conveyor shaft from the said pulley thereon.

8. In a slicing machine, a cutter, a carriage, a feed shaft for moving the carriage to advance material to be sliced toward the cutter, a conveyor, a conveyor shaft, means mounted loosely on the conveyor shaft and over which the said conveyor passes, means for driving the conveyor shaft from the feed shaft, means for simultaneously connecting and disconnecting the carriage to the feed shaft and connecting and disconnecting the conveyor shaft to and from the means thereon for moving the conveyor, and suction means by which the slices as cut from the said material are positioned on the said conveyor.

9. In a slicing machine, a cutter, a carriage, a feed shaft for moving the carriage to advance material to be sliced toward the cutter, a conveyor, a conveyor shaft, means mounted loosely on the conveyor shaft over which the said conveyor passes, means for driving the conveyor shaft from the feed shaft, means for simultaneously connecting and disconnecting the carriage to the feed shaft and connecting and disconnecting the conveyor shaft to and from the means thereon for moving the conveyor, a suction box connected at the delivery side of the said cutter, and means for creating a suction in the said suction box whereby slices as cut from the material are transferred to and positioned on the said conveyor.

10. In a slicing machine, a cutter, a carriage, a feed shaft for moving the carriage to advance material to be sliced toward the cutter, a position plate for determining the initial position of the material, a conveyor, a conveyor shaft, means mounted loosely on the conveyor shaft and over which the said conveyor passes, means for driving the conveyor shaft from the feed shaft, and means for simultaneously connecting and disconnecting the carriage to the feed shaft and connecting and disconnecting the conveyor shaft to and from the means thereon for moving the conveyor.

11. In a slicing machine, a cutter, a carriage, a feed shaft for advancing the carriage toward the cutter, a conveyor, a conveyor shaft, means on the conveyor shaft for moving the conveyor, means for driving the conveyor shaft from the said feed shaft, means operative for simultaneously connecting and disconnecting the feed shaft to the carriage and conveyor shaft for moving the conveyor away from the cutter when in connected relationship, and means for moving the conveyor in the opposite direction when the said last named means is disconnected.

Signed by me this 29th day of March, 1929.

CHRISTIAN ROESCH.