Aug. 24, 1965 H. V. WILLIAMS ETAL 3,201,961

CONTROL DEVICE

Filed March 26, 1962 4 Sheets-Sheet 1

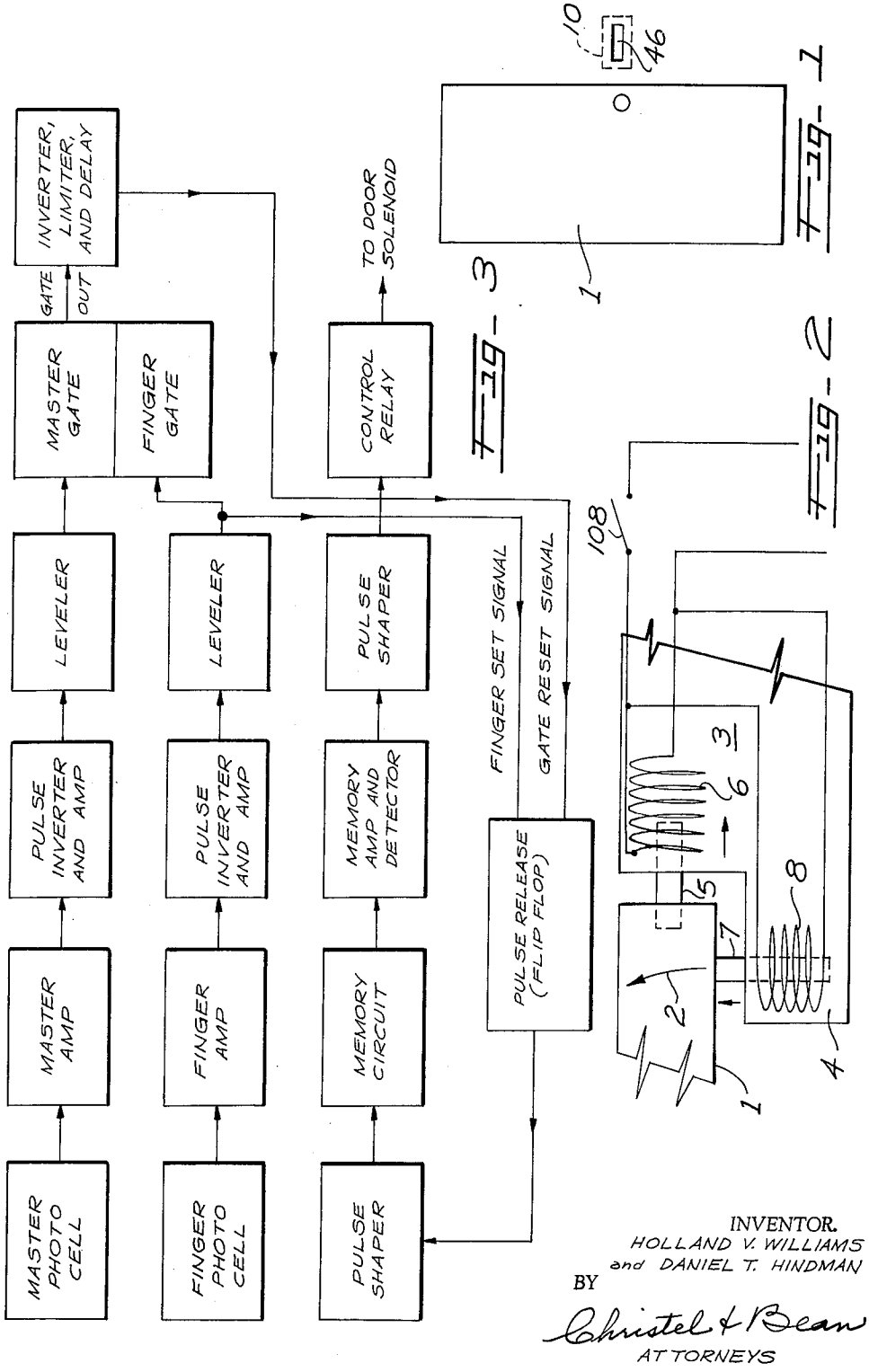

Fig-1

Fig-3

Fig-2

INVENTOR.
HOLLAND V. WILLIAMS
and DANIEL T. HINDMAN

BY

Christel & Bean

ATTORNEYS

Aug. 24, 1965 H. V. WILLIAMS ETAL 3,201,961

CONTROL DEVICE

Filed March 26, 1962 4 Sheets-Sheet 2

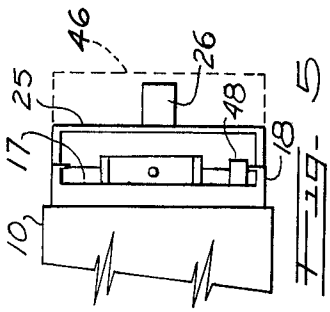

FIG. 5

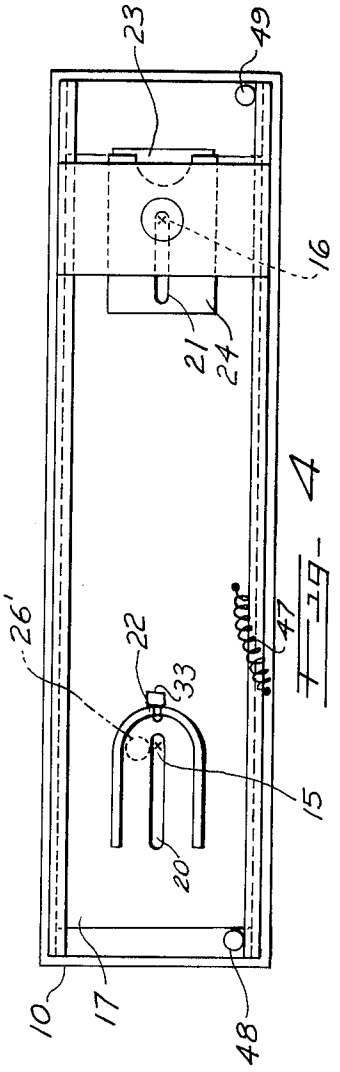

FIG. 4

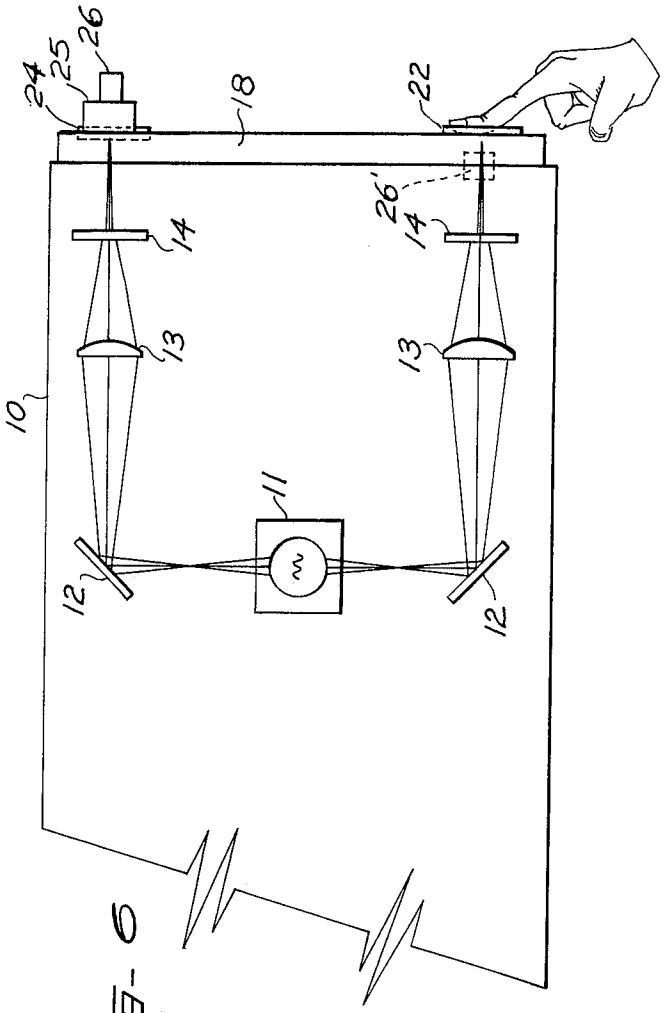

FIG. 6

INVENTOR.
HOLLAND V. WILLIAMS and
DANIEL T. HINDMAN
BY
Christel & Bean
ATTORNEYS

Aug. 24, 1965 H. V. WILLIAMS ETAL 3,201,961

CONTROL DEVICE

Filed March 26, 1962 4 Sheets-Sheet 3

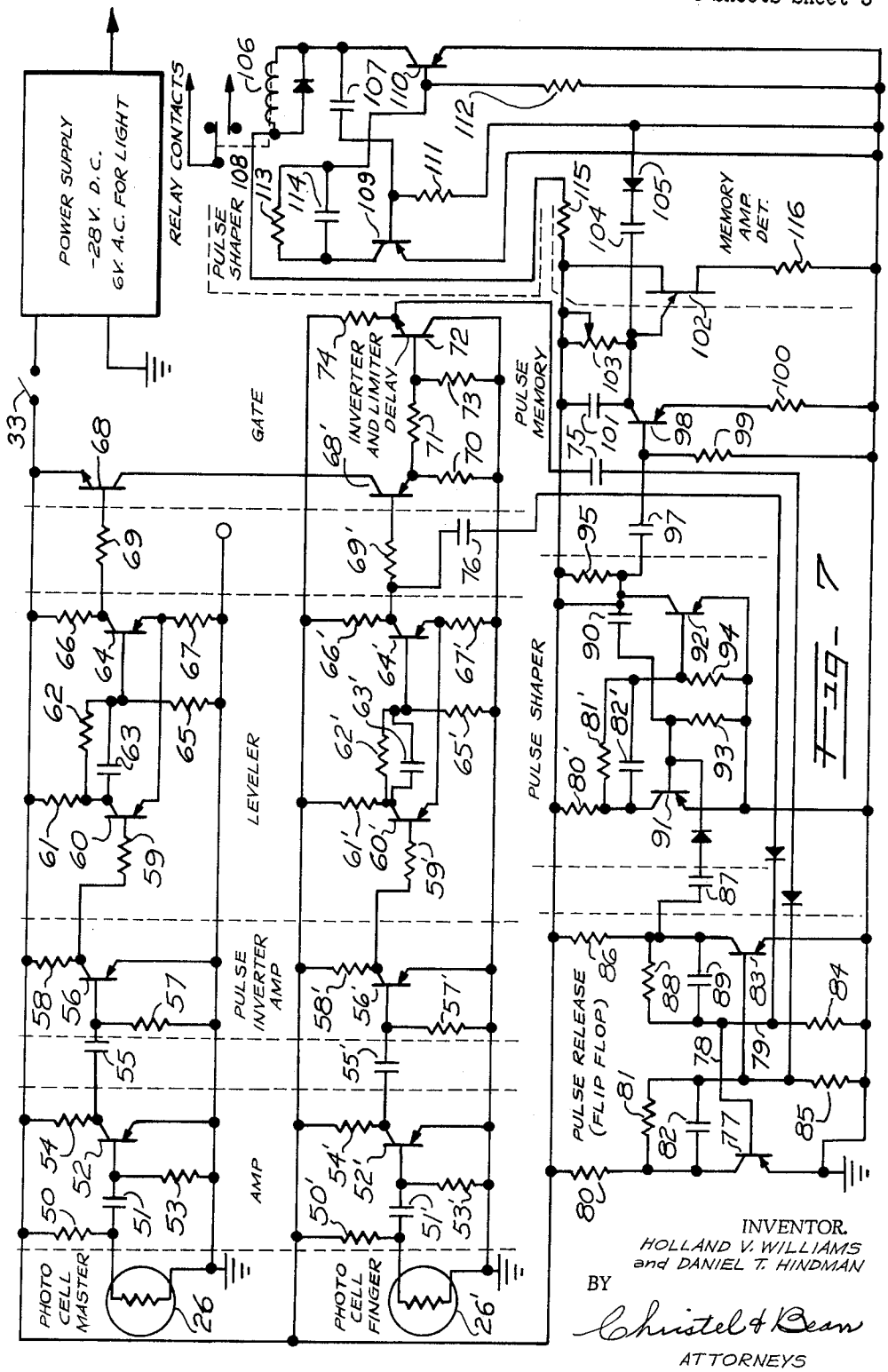

FIG. 7

INVENTOR.
HOLLAND V. WILLIAMS
and DANIEL T. HINDMAN
BY
Christel & Bean
ATTORNEYS

Aug. 24, 1965 H. V. WILLIAMS ETAL 3,201,961

CONTROL DEVICE

Filed March 26, 1962 4 Sheets-Sheet 4

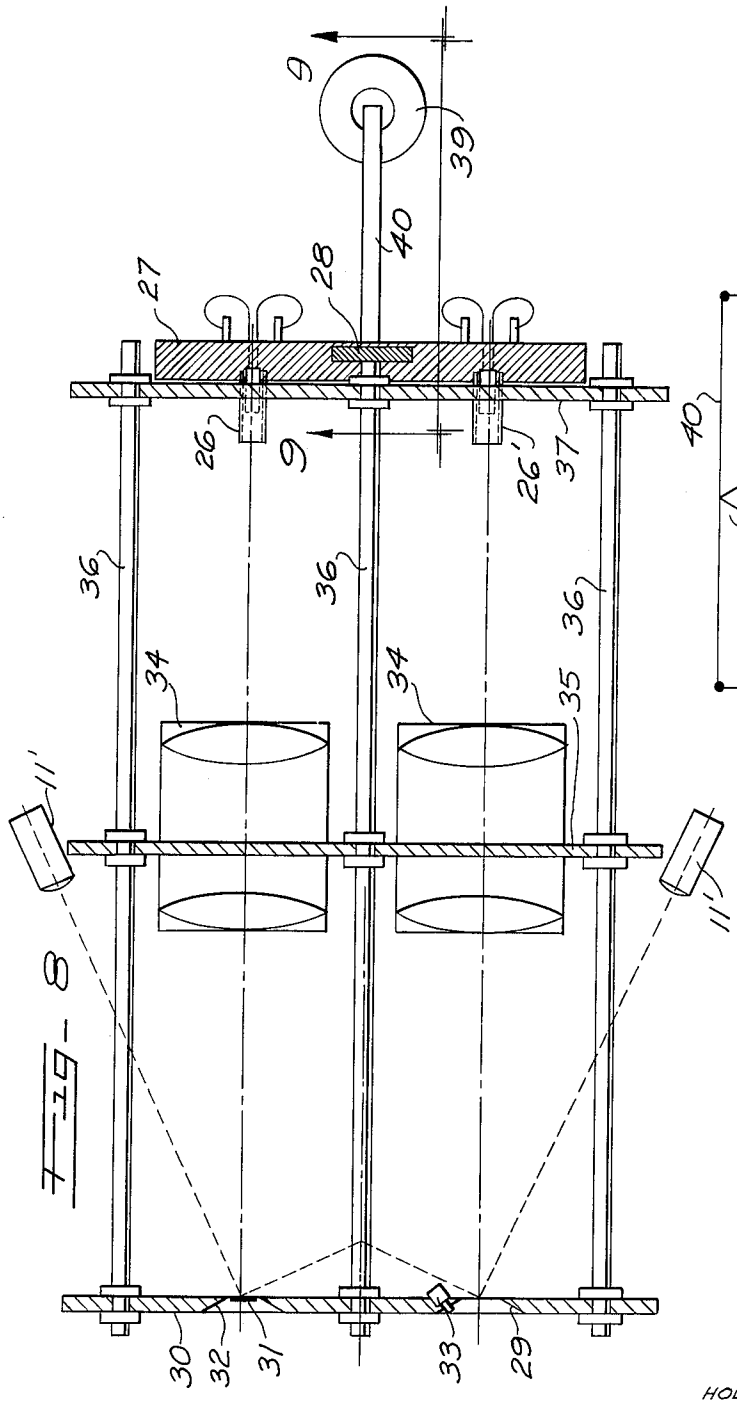

FIG. 8

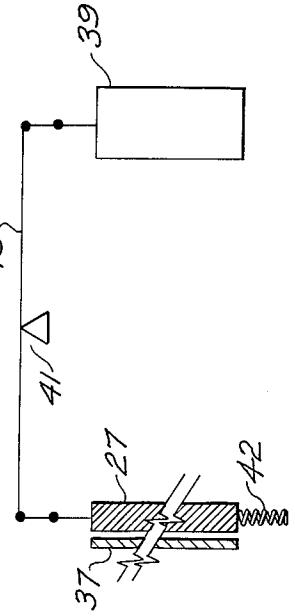

FIG. 9

INVENTOR.
HOLLAND V. WILLIAMS and
DANIEL T. HINDMAN
BY
Christel & Bean
ATTORNEYS

United States Patent Office 3,201,961 Patented Aug. 24, 1965

3,201,961

CONTROL DEVICE

Holland V. Williams, Buffalo, and Daniel T. Hindman, Kenmore, N.Y., assignors to Finger Keys, Inc., Buffalo, N.Y.

Filed Mar. 26, 1962, Ser. No. 182,588
18 Claims. (Cl. 70—277)

This invention relates generally to the control art. More specifically, it is particularly concerned with the control of a member, for example a door, in response to the presentation of a skin surface having a pre-selected pattern.

Residential and commercial doors are customarily provided with key-operated locks. While such key locks serve their intended purpose admirably, they do possess certain disadvantages. The necessity of using a key to gain admittance is highly inconvenient when the person desiring admittance does not have his hands free to reach for his key and manipulate it in the lock. It also is inconvenient to the person who carries a large number of keys and must try them one by one, in the dark, until he finds the right one.

In addition to the annoyance and inconvenience resulting from these situations, which are all too common, particularly around the home, there is a potential danger and loss of security, particularly in commercial applications where several employees are provided with keys giving them access to particular areas. The necessity of passing out a large number of keys makes it likely that one or more of them will be lost, or perhaps fall into the hands of an unscrupulous person, whereby the key lock does not provide the degree of security intended. Indeed, it is often necessary to provide a watchman, or take even more elaborate precautions, because of this factor.

Accordingly, the primary object of our invention is to provide a control system, for unlocking doors and the like, which can be operated only by one or more predetermined individuals, and which does not require the use of a key or other separate lock manipulating device carried by such individuals.

Another object of our invention is to provide a control device, for doors and the like, which is operable automatically upon presentation of a fingertip having a preselected, distinguishing pattern.

Still another object of our invention is to provide a door control device for unlocking a door automatically upon presentation of a fingertip having a particular, distinguishing pattern, which can be used in conjunction with a conventional key lock to permit operation by means of a key as well as by presentation of a particular fingertip pattern.

In one aspect thereof, a door control system constructed in accordance with our invention is characterized by the provision, in combination with a door control member, of means operating the control member automatically in response to a pre-selected fingertip pattern, the operating means including means for scanning a fingertip and generating a first signal corresponding to the pattern thereof, means for simultaneously scanning a reference fingerprint and generating a second signal corresponding to the pattern thereof, and means responsive to correspondence of the first and second signals for operating the door control member only upon substantial identity between the two patterns.

In another aspect thereof a door control system constructed in accordance with our invention is characterized by the provision, in combination with a door control member, of means for operating the control member automatically in response to a pre-selected fingertip pattern including a test station located adjacent the door for presentation of a fingertip by a person desiring to control

the door, together with means for scanning a fingertip presented at the test station and generating a first signal corresponding to the pattern thereof, means for simultaneously scanning a reference fingerprint and generating a second signal corresponding to the pattern thereof, and means responsive to correspondence of the first and second signals for operating the control member only upon substantial identity between the patterns thus compared.

In still another aspect thereof, the control system of our invention is characterized by the provision of a control member, and means for operating the control member automatically in response to a pre-selected fingertip pattern, the operating means including means for scanning a fingertip and generating a first series of pulses corresponding to the pattern thereof, means for simultaneously scanning a reference fingerprint and generating a second series of pusles corresponding to the pattern thereof, means controlled by the first and second series of pulses for generating a third series of pulses in correspondence with concurrent first and second pulses, and means operating the control member in response to a predetermined number of third pulses generated within a predetermined time interval, whereby the control member is operated only upon substantial identity between the patterns.

The foregoing and other objects, advantages and characterizing features of our invention will become clearly apparent from the ensuing detailed description of one, illustrative embodiment, and a modification of a portion thereof, taken together with the accompanying drawings illustrating the same wherein like reference numerals denote like parts throughout the various views and wherein:

FIG. 1 is a schematic view of a door, showing the location of the finger scanning unit of our invention adjacent thereto;

FIG. 2 is a fragmentary, schematic view, on an enlarged scale, of the door releasing and opening mechanisms;

FIG. 3 is a block diagram of a control system of our invention;

FIG. 4 is a front elevational view of the scanning unit, with the shield removed;

FIG. 5 is a fragmentary, side elevational view thereof;

FIG. 6 is a schematic, top plan view thereof, on a reduced scale;

FIG. 7 is a detailed circuit diagram, corresponding to the block diagram of FIG. 3;

FIG. 8 is a schematic top plan view of a modified scanning unit; and

FIG. 9 is a diagrammatic, sectional view taken about on line 9—9 of FIG. 8.

Referring now in detail to the accompanying drawings, there is shown in FIGS. 1–7 an illustrative embodiment of our invention as applied to the control of a door 1 which is conventionally hung, as by hinges (not shown) at the upper left-hand corner as viewed in FIG. 2, for opening movement in the direction of the arrow 2. The door has a jamb 3 with a projection 4 against which the door closes. This can be a conventional door having a regular lock and key operated lock release (not shown), but also having a door control mechanism of our invention.

There is shown, by way of illustration, a latch bolt 5 extending between jamb 3 and door 1 to hold the latter against opening movement, and adapted to be retracted into the jamb upon energization of a coil 6. Bolt 5 also could be retracted by a key, if desired. Coil 6 can be energized from any appropriate source, not illustrated. In addition to releasing door 1, by retracting latch bolt 5, we preferably provide means for opening the door. Such means can include a plunger 7 which is projected forwardly upon energization of coil 8 to push the door in

the direction of arrow 2. A spring (not shown), stressed upon closing the door, also can be provided to impart an opening force thereto.

The coils 6 and 8 have a common energizing circuit, under control of a switch 108 which is closed to energize coils 6 and 8, and thereby release and open the door, as follows.

The control system of our invention is responsive to a fingertip pattern, and provides means for comparing the pattern of a fingertip presented at a test station with the pattern of a master or reference print, and closing switch 108 only when the patterns are identical. To this end, a scanning unit 10 is conveniently positioned adjacent door 1, as shown in FIG. 1. The scanning unit, as shown in detail in FIGS. 4–6, comprises a housing containing a light source 11. Mirrors 12 and simple lenses 13 focus light from source 11 on two plates 14 each having a very small aperture, such as a No. 60 hole, therethrough to provide essentially a point of light at a test station, denoted by point 15, and at a reference station, denoted by point 16. A slide 17 is guided by a channel 18 for movement lengthwise of the slide, and has a pair of slots 20 and 21 therethrough elongated in the direction of movement of the slide. Slot 20 is alined with point 15, and is surrounded on three sides by a finger centering tray 22 defining therewith a finger test station. Slot 21 is alined with point 16, and with a master print 23 on a transparency positioned in a pocket 24 carried by slide 17 and defining, with slot 21 and point 16, a reference station.

A master photocell 26 is positioned on a bracket 25 in alinement with point 16, to be energized by light passing through print 23, the pocket 24 being sloted in alinementw ith slot 21 for this purpose. A test photocell 26′ is positioned within the housing approximately ⅛ inch behind slide 17 and slot 20, to be energized by light reflected from a finger tip position over slot 20. The operation of this scanning unit is as follows.

A person desiring admittance places the proper finger tip in tray 22. This automatically centers the finger tip relative to slot 20 and point 15, and closes switch 33 to turn on the unit (see FIG. 7). Because light from source 11 has been reduced to substantially a point at 15 and 16, only a very small portion of the finger tip is illuminated, and only the corresponding portion of the reference print 23 is illuminated. The person then pushes slide 17, to the right in FIG. 4, until it is stopped by pin 49. This causing the portions of the finger tip and the master print which are alined with slots 20 and 21 to be scanned by photocells 26 and 26′, respectively. The photocells "see" only a small point of the respective patterns at any one instant, and by scanning in this manner the variations in light intensity, produced by the finger patterns cause a corresponding variation in the energization of the photocells. With the apparatus thus described, corresponding portions of the two patterns, test and reference, are scanned in synchronism.

Upon retracting the finger, switch 33 is opened and spring 47 returns slide 17 against stop 48. A hood 46 encloses slide 17, except at the finger entrance end, to shield the photocells from extraneous light.

An alternate scanning arrangement is illustrated in FIGS. 8 and 9. Here, instead of moving the finger and reference print, relative to the photocells, the photocells are mounted on a slide 27, guided on an upright 28, for vertical movement. The finger to be tested is presented at an aperture 29 in a member 30, and the reference pattern 31 is mounted in a second aperture 32. Switch 33 is again positioned to be actuated upon inserting a finger in aperture 29, for initiating the scanning procedure.

Light sources 11′ are beamed one on the reference print 31 and the other on the finger aperture. Objective lenses 34, carried by a wall member 35, focus the reflected pattern onto photocells 26, 26′. Members 30 and 35 are held together by spacing struts 36 which also engage an end wall member 37 and the vertical guide 28.

Photocells 26 and 26′ are here selected to admit only a point of light, whereby they "see" only corresponding parts of the reflected patterns. Upon moving member 27 upwardly, the entire pattern is scanned, as before.

Member 27 is moved by a solenoid 39 which pivots a lever 40 about a fulcrum 41, the lever being connected to member 27 for elevating the same against the action of a return spring 42. Solenoid 39 will be energized upon actuating switch 33, with a time delay to allow the unit to warm up, if desired. Also, it will be energized only once for each actuation of switch 33.

Turning now to the detailed circuit diagram of FIG. 7, which is depicted in block diagram form in FIG. 3, it will be seen that identical signal generating circuits are provided for the master or reference print and the test finger. Thus, considering first the master circuit there is provided the photocell 26 connected between a load resistor 50 and ground, across the power supply. Variations in the pattern of light on photocell 26, caused by the passage of alternating light and dark areas across point 16 as print 23 is scanned, generate current pulses which pass to the amplifier input through the coupling condensor 51. The first amplifier stage, comprising transistor 52, bias resistance 53, and load resistance 54, amplifies these pulses which then pass to a second amplifier stage through coupling condensor 55. The second stage, consisting of transistor 56, bias resistance 57, and load resistance 58, further amplifies the signal pulses, and inverts them by changing their polarity.

The amplifier stages are connected to a leveler circuit, through coupling resistance 59. The leveler is a conventional Schmitt trigger circuit, having a transistor 60, load resistance 61 and resistance-capacitance coupling network 62, 63. The output of transistor 60 passes to the amplifier section comprising transistor 64 having a bias resistance 65 and load resistance 66. A common emitter resistance 67 is provided.

The result is the production of a pulse of maximum amplitude, regardless of the input amplitude, so long as the input signal pulse is of sufficient strength or amplitude to turn on transistor 60. Variations in the amplitude of the input pulses, such as will naturally occur, are thereby accommodated, and the level, uniform output pulses of maximum amplitude are transmitted to the first gate transistor 68 through a coupling resistance 69.

The signal generating circuit thus described is identical for the test finger, and the corresponding elements are therefore correspondingly numbered, but with primes to denote the test circuit as distinguished from the master circuit. Of course, in the test circuit the signal pulses are generated by variations in the intensity of reflected light, caused by the passage of alternating ridges and grooves past point 15.

Thus, the test circuit generates a signal which is transmitted to its gate transistor 68′, and it is a particular feature of this invention that the gate transistors 68 and 68′ are connected in series. Accordingly, both gate transistors must be energized or turned on in order to open the gate and produce an output pulse. If during operation of the finger slide as previously described, there is produced a master pattern signal pulse without a corresponding signal pulse being produced by the finger pattern under test, there will not be the requisite energization of transistors 68 and 68′ and the gate circuit will not be completed. Therefore, only when the master pattern and the test pattern are identical, resulting in the generation of concurrent pulses, will the two gate transistors be energized at the same time to permit the passage of an output pulse.

When transistors 68 and 68′ are simultaneously energized, a voltage drop occurs across load resistance 70, generating a pulse transmitted to an inverter and limiter circuit through coupling resistance 71. The limiter com-

prises a transistor 72 with a relatively low bias resistance 73 selected so as to prevent the passage of random pulses such as might be produced by stray noise, and the like. Therefore, transistor 72 conducts only when energized by a signal of sufficient amplitude, such as produced upon concurrent operation of the first two signal generating circuits.

Upon energization of transistor 72, the voltage drop across its load resistance 74 produces a pulse identified as a gate reset signal pulse, and this is transmitted to the pulse release circuit through coupling condenser 75.

The pulse release circuit is designed to generate or release a pulse upon energization by a gate reset signal pulse. However, this can occur only when the pulse release circuit has first been conditioned by a signal pulse derived from one of the pattern signal generating circuits. In the embodiment shown, the gate energizing pulse from the finger test signal generating circuit also is transmitted, via coupling condenser 76, to one side of the pulse release circuit as a set signal pulse. This sets the circuit to release a pulse when the other side of the release circuit is energized by a reset signal pulse from the gate.

The pulse release circuit is in the form of a conventional flip-flop circuit, having on one side a transistor 77 with its base connected, through leads 78 and 79, to receive the set signal via capacitance 76. Transistor 77 has a load resistance 80, and is coupled via the resistance-capacitance network 81, 82 to the base of a transistor 83 on the other side of the circuit. The transistors 77, 83 have bias resistances 84, 85, respectively. When the reset signal is received, via capacitance 75, transistor 83 is turned on, producing a voltage drop across its load resistance 86. This produces a pulse which triggers a pulse shaper circuit through coupling condenser 87.

The resistance-capacitance network 88, 89 maintains the first "set" side of the pulse release circuit energized, pending energization of the second side by the reset signal. If the reset signal is not received, the pulse release circuit simply stays in the condition to which it is set by the set signal, and no triggering pulse is released to the pulse shaper circuit. If only the reset signal is received, without prior conditioning by a finger set signal, no pulse is released to trigger the shaper circuit. The flip-flop release circuit must first be conditioned by a signal from one of the pattern responsive signal generating circuits.

The significance of this lies in the fact that noise of some other unintended factor might conceivably cause production of a gate output signal. Such inadvertent or stray actuation of the device, causing the door to open, would be highly undesirable. With the initial, set signal circuit of this invention, that cannot happen, because the pulse release circuit will release a pulse, to open the door, only when a signal has passed from one of the pattern responsive circuits to the gate.

The pulse shaper circuit is merely a monostable flip-flop circuit, identical with the pulse release circuit except that the holding network 88, 89 is replaced by a holding condenser 90 which maintains the transistor 91 conductive or turned on and thereby stretches out the generated pulse. Transistor 91 has a load resistance 80′ and a bias resistance 93, and has a resistance-capacitance network 81′, 82′ coupling it to transistor 92 which has a load resistance 95 and bias resistance 94.

The pulse shape is thereby enlarged or lengthened, and this pulse is transmitted via coupling condenser 97 to the transistor 98 of a memory circuit. Transistor 98 is provided with a base bias resistance 99 and an emitter bias resistance 100, and has in its collector circuit the memory condenser 101.

Condenser 101 has a most important function, in that it comprises the memory device in which the generated pulses are stored and added up. If sufficient pulses are received, the unijunction transistor 102 is turned on. Transistor 102 is turned on only when the voltage level in its emitter circuit reaches the predetermined firing point. This voltage level can be reached only when a sufficient number of pulses are stored in condenser 101. If enough pulses are received, to reach the requisite voltage level, then transistor 102 is turned on.

In addition, the requisite number of pulses must reach the memory condenser 101 within a predetermined time interval, as determined by a variable load resistor or potentiometer 103 which gradually dissipates the energy stored in condenser 101. If the arrival of pulses at condenser 101 is not at a rate exceeding the rate of dissipation of their effect through resistance 103, then control transistor 102 will not be turned on. This can occur only if the patterns being compared are identical, at least to a predetermined high degree, because otherwise the number of concurrent pattern responsive pulses will not be sufficient to provide the required number of gate pulses.

If transistor 102 is turned on, it provides a short circuit for condenser 101, immediately discharging the same. This causes a voltage drop across resistance 103, producing a negative pulse which is transmitted via condenser 104 and reverse diode rectifier 105 to a pulse-shaping circuit. This pulse shaping circuit is identical with the pulse shaping circuit previously described except that the output load resistance 95 is replaced by a relay coil 106. Coil 106 is connected across the power supply via current limiting resistance 115. The condenser 107, which is larger than condenser 90, stretches out the pulse sufficiently to pull in relay 106 and thereby move the switch 108 to a closed position. Transistor 109 has a bias resistance 111, and is coupled via resistance-capacitance circuit 113–114 to transistor 110 with its bias resistance 112.

The reverse diode rectifier 105 will pass only the negative pulses, produced upon turning on transistor 102, while preventing passage of the relatively positive pulses as they are being stored in the memory condenser 101.

Accordingly, it is seen that our invention fully accomplishes its intended objects. The finger under test is directly scanned, without requiring that a separate print be taken, and its pattern is compared with a reference pattern. Only when the patterns are identical, or as nearly identical as required, will the door be opened. The pattern being compared can be the typical, alternating ridge and groove pattern, or it can be the pattern of surface variation on the ridges or grooves, and by proper selection of components a degree of discrimination equaling and exceeding that which is available with key-opened locks can be obtained.

Obviously, the control system of our invention is applicable to actuation in response to skin surface patterns other than finger tip patterns. Also, means other than scanning, such as multiple light sensitive cells, can be used to "read" the skin surface being tested. For greater security, simultaneous presentation of two or more preselected skin surfaces, belonging to one or more persons, can be required for operation of the device.

While we have disclosed and described in detail only one embodiment of our invention, and one modification of a portion thereof, that has been done by way of illustration only without thought of limitation. Variations and modifications will naturally occur to those skilled in the art, and are intended to be included within the scope of the appended claims. Also, we are aware that our invention has utility in fields other than the control of doors.

Having fully disclosed and completely described our invention, together with its mode of operation, what we claim as new is:

1. A door controlling system comprising, in combination with a door control member, means for operating said control member automatically in response to a preselected fingertip pattern including means for scanning a fingertip and generating a first signal corresponding to the pattern thereof, means for simultaneously scanning a ref-

erence finger print and generating a second signal corresponding to the pattern thereof, and means responsive to correspondence of said first and second signals for energizing said operating means only upon substantial identity between said patterns.

2. A door unlocking system comprising, in combination with a door and a lock for said door, a lock releasing circuit, means for energizing said lock releasing circuit automatically in response to a pre-selected fingertip pattern, said energizing means including a control device in controlling relation to said lock releasing circuit, means for scanning a fingertip and generating a first signal corresponding to the pattern thereof, means for simultaneously scanning a reference finger print and generating a second signal corresponding to the pattern thereof, and means operable in response to correspondence of said first and second signals for actuating said control device only upon substantial identity between said patterns.

3. A door control system comprising, in combination with a door and a control member for said door, means for operating said door control member automatically in response to a pre-selected finger tip pattern including a test station adjacent said door for presentation of a finger tip by a person desiring to control said door, means for scanning a finger tip presented at said test station and generating a first signal corresponding to the pattern thereof, means for simultaneously scanning a reference fingerprint and generating a second signal corresponding to the pattern thereof, and means responsive to correspondence of said first and second signals for energizing said operating means only upon substantial identity between said patterns.

4. A door control system comprising, in combination with a door and a control member for said door, means for operating said control member automatically in response to a pre-selected finger tip pattern, said operating means including means for illuminating a finger tip presented by a person desiring to operate said control member, means for illuminating a reference fingerprint, photoelectric means for scanning the illuminated finger tip and generating a first signal corresponding to the pattern thereof, photoelectric means for simultaneously scanning the illuminated reference print and generating a second signal corresponding to the pattern thereof, and means responsive to correspondence of said first and second signals for energizing said operating means only upon substantial identity between said patterns.

5. The system of claim 4, wherein said scanning is accomplished by exposing only small corresponding portions of the finger tip and the reference print to the associated photoelectric means at any one time, and moving the tip and the print relative to said photoelectric means.

6. The system of claim 4, wherein said scanning is accomplished by exposing only small corresponding portions of the finger tip and the reference print to the associated photoelectric means, and moving said photoelectric means, relative to the tip and the print.

7. A door control system comprising, in combination with a door and a control member for said door, means for operating said control member automatically in response to a pre-selected finger tip pattern, said operating means including means for scanning a finger tip and generating a first series of pulses corresponding to the pattern thereof, means for simultaneously scanning a reference fingerprint and generating a second series of pulses corresponding to the pattern thereof, means controlled by said first and second series of pulses for generating a third series of pulses, said last-named means generating a pulse only in response to concurrent first and second pulses, and means responsive to said third series of pulses for energizing said operating means only upon substantial identity between said patterns.

8. A door control system as set forth in claim 7, wherein said last-named means require energization by a predetermined number of third pulses before energizing said operating means.

9. A door control system as set forth in claim 8, wherein said last-named means require energization by a predetermined number of third pulses within a predetermined time interval before energizing said operating means.

10. A door control system comprising, in combination with a door and a control member for said door, means for operating said control member automatically in response to a pre-selected finger tip pattern, said operating means including means for scanning a finger tip and generating a first series of pulses corresponding to the pattern thereof, means for simultaneously scanning a reference fingerprint and generating a second series of pulses corresponding to the pattern thereof, pulse gate means controlled by said first and second series of pulses and generating a third series of pulses corresponding to concurrent first and second pulses, pulse release means energized by said third series of pulses and controlled by one of said first and second series of pulses for generating a fourth series of pulses, said pulse release means generating a fourth pulse for each third pulse for which there is a pulse from said one series thereof, and means responsive to fourth series of pulses for energizing said operating means.

11. A door controlling system comprising, in combination with a door and a door control member, means for operating said control member automatically in response to a pre-selected skin surface pattern including means directly responsive to a skin surface for generating a first signal corresponding to the pattern thereof, means responsive to a reference skin print for generating a second signal corresponding to the pattern thereof, and means responsive to correspondence of said first and second signals for energizing said operating means only upon substantial identity between said patterns.

12. A control system comprising, a control member, and means for operating said control member automatically in response to a pre-selected skin surface pattern, said operating means including means for scanning a skin surface and generating a first series of pulses corresponding to the pattern thereof, means for simultaneously scanning a reference skin print and generating a second series of pulses corresponding to the pattern thereof, means controlled by said first and second series of pulses for generating a third series of pulses, said last-named means generating a pulse only in response to concurrent first and second pulses, and means responsive to said third series of pulses for energizing said operating means only upon substantial identity between said patterns.

13. A control system as set forth in claim 12, wherein said last-named means require energization by a predetermined number of third pulses before energizing said operating means.

14. A control system as set forth in claim 13, wherein said last-named means require energization by a predetermined number of third pulses within a predetermined time interval before energizing said operating means.

15. A control system comprising, a control member, and means for operating said control member automatically in response to presentation of a pre-selected skin surface pattern, said operating means including means for directly reading a skin surface pattern and comparing it to a reference pattern, positioning means for receiving a pre-selected skin surface portion and positioning it in predetermined relation to said direct reading means, and means responsive to a predetermined degree of correspondence between said patterns for energizing said operating means.

16. A control system as set forth in claim 15, together with control means associated with said positioning means for actuation upon positioning of said pre-selected skin surface portion by said positioning means.

17. A control system comprising, a control member, means for operating said control member automatically in response to a pre-selected skin surface pattern, said operating means including means for illuminating a skin surface presented by a person desiring to operate said control member, means for scanning the illuminated skin surface and generating a first signal corresponding to the pattern thereof, means for scanning a reference skin surface print and generating a second signal corresponding to the pattern thereof, and means responsive to correspondence of said first and second signals for energizing said operating means only upon substantial identity between said patterns.

18. A door control system comprising, in combination with a door and a control member for said door, means for operating said control member automatically in response to a pre-selected fingertip pattern including a test station adjacent said door for presentation of a fingertip by a person desiring to control said door, positioning means for centering a pre-selected fingertip presented at said station, means directly responsive to a fingertip thus

presented and centered at said test station for generating a first signal corresponding to the pattern thereof, means for generating a second signal corresponding to the pattern of a reference fingerprint, and means responsive to correspondence of said first and second signals for energizing said operating means only upon substantial identity between said patterns.

References Cited by the Examiner

UNITED STATES PATENTS

511,668	12/93	Weymouth	16—80
1,941,150	12/33	Meyer	70—160
2,893,726	7/59	Sharpe	268—72
2,936,607	5/60	Nielsen	70—277
3,029,345	4/62	Douglas	70—277 X

FOREIGN PATENTS

998,272	9/51	France.

ALBERT H. KAMPE, *Primary Examiner.*