A. DONNER.

STAMPING DEVICE.

APPLICATION FILED SEPT. 24, 1913.

1,129,279.

Patented Feb. 23, 1915.

Fig. 1.

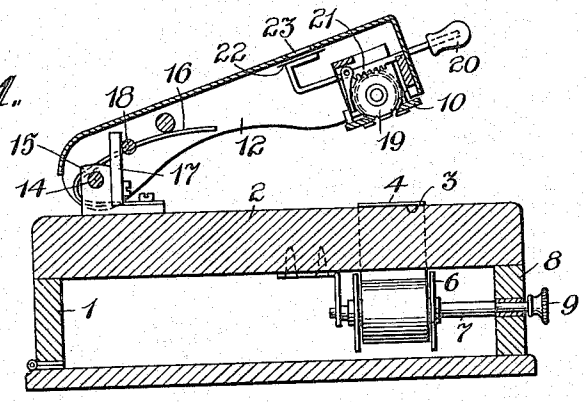

Fig. 2.

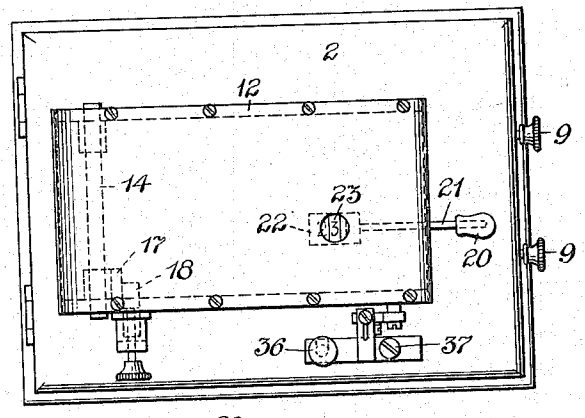

Fig. 3.

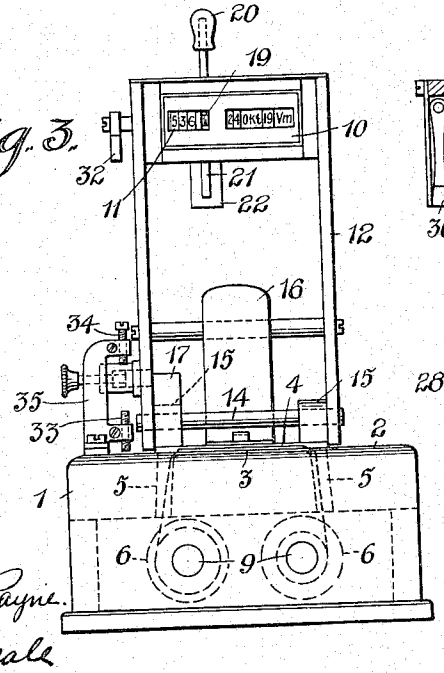

Fig. 4.

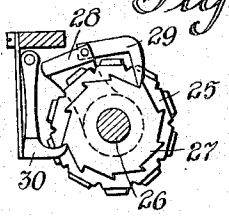

Fig. 5.

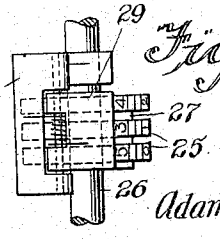

Witnesses

Samuel T. Payne.

C. A. Neale

Inventor

Adam Donner.

by Wm. H. Babcock & Son

Attorneys

THE NORRIS PETERS CO., PHOTO-LITHO., WASHINGTON, D. C.

UNITED STATES PATENT OFFICE.

ADAM DONNER, OF ELBERFELD, GERMANY.

STAMPING DEVICE.

1,129,279. Specification of Letters Patent. Patented Feb. 23, 1915.

Application filed September 24, 1913. Serial No. 791,494.

To all whom it may concern:

Be it known that I, ADAM DONNER, citizen of the German Empire, residing at Elberfeld, in the Province of Rhenish Prussia, Germany, have invented certain new and useful Improvements in Stamping Devices, of which the following is a specification.

My invention relates to stamping devices which can be employed, in particular, for stamping sale-checks and the like in shops or warehouses, or for other purposes, the same employing unreversed type which press a sheet of paper on an inking ribbon so that the type itself is not inked, which avoids all deleterious action on metal type thus used or other metal parts.

The said invention consists in the construction and combination of the various elements of the stamping mechanism as hereinafter more particularly set forth and claimed.

Figure 1 shows the device in longitudinal section, Fig. 2 the same in plan, Fig. 3 the same viewed from the front, the stamp being turned up into its highest position, and Figs. 4 and 5 are detail views showing the arrangement of the automatic feed mechanism.

In the embodiment illustrated by way of example the stamping device comprises a case or box 1 having a specially strong lid 2 whereon the stamp-pad is located. The latter consists of a pressure or bedding plate 3 of vulcanized fiber or other suitable material and an inked ribbon 4 which is guided over the pressure plate, and both ends of which are guided into the interior of the case through slots 5 arranged in the lid 2, and are there wound on reels 6. The axles 7 of these reels are passed through the front wall 8 of the case and are each provided in front with a head 9, so that by rotation of these heads 9 the inked ribbon can be moved over the pressure plate. Opposite the stamping pad is the stamping head which comprises a fixed stamping plate 10 and several rotatable type-wheels 11. The stamping head is mounted in a frame or casing 12 which is journaled by means of the axle 14 in the bearings 15 fast on the lid 2, and which consequently so guides the stamping head that it always meets the stamp-pad vertically. At the place whereat the frame 11 is supported a leaf-spring 16 is arranged, the tendency of which is to hold the frame in an elevated position, and which is limited by a stationary stop 17, which so coacts with a movable pin 18 in the frame, that the latter is ordinarily held by the spring 16 in the position shown in Fig. 1.

The stamping operation is carried out in the following manner. The check, ticket or the like which is to be stamped is placed on the stamp-pad or inked ribbon and, as the result of the stamping head being depressed, is so pressed on to the ink ribbon that the ink from the inked ribbon is transferred, in accordance with the embossed portions of the stamp, on to the lower side of the paper without the ink coming into contact with the stamp itself. In this manner there is formed on the paper a faithful, correctly placed copy of the stamp characters, and in consequence of this the figures and letters on the stamping head are not, as is usual, made in the form of reverse image or negative but in the form of entirely normal, correctly placed symbols, as may be seen by reference to Fig. 3. Consequently the further advantage is obtained that the adjustment of the type-wheels, *e. g.* of the date, so far as it is effected from the lower side of the stamping head and by hand, can be carried out much more simply and surely, because after such adjustment the date can be correctly read without difficulty.

In order to keep a check on the person at any time operating this device, a special type-wheel 19 furnished with figures I–III is provided, which gears with a rack-rod 21 projecting outwardly from the casing and provided with a grip 20, a tablet 22 furnished with the same figures being arranged at the other end of the rack. Consequently it is possible by pushing or pulling the rack-rod 21 to adjust the type-wheel from outside, the corresponding number on the tablet 22 being visible from outside through an aperture 23 arranged in the cover of the casing. The figures on the type-wheel 19 as well as on the tablet 22 are here arranged in the order I, III, II so that in order to adjust the numbers I and II which are most commonly required, the rack need be simply pushed or pulled into one of the two end positions, whereas the adjustment of the more rarely required number III must be effected by pushing or pulling the rack into the middle position.

Since according to the present invention all contact by the ink with the stamping head and its internal mechanism is avoided,

the device is consequently not only more adjustable, but renders possible automatically fed type-wheels, *i. e.* stamping with consecutive numbers, such as is for many purposes desirable, without apprehension that the adjusting and feed mechanism will damage by the ink. Automatically fed type-wheels such as referred to are arranged on the left half of the stamping head and the feed device itself is specially illustrated on an enlarged scale in Figs. 4 and 5. The type-wheels 25 which effect the stamping of the consecutive numbers are rotatably mounted on a feed-axle 26 and each have at the side a notched wheel 27, whereinto a pawl 29 fastened to an arm 28 on the axle 26 engages, and when the axle is rotated at intervals causes the type-wheels to be fed forward, an undesired backward movement of the type-wheels being prevented by a second fixedly pivoted detent 30. At that end of the axle 26 which extends outside the casing, a feed-lever is fastened which when the stamp is operated coacts alternately with the two adjustable stops 33, 34 of the bracket 35 fast on the lid 2, and consequently causes an oscillating motion of the feed-axle 6.

The remaining type-wheels with the exception of the wheel for checking the operator are adjusted thus. The bracket 35, after being released from the fastening screw 36, is swung outwardly around the other fastening screw 37 and the movable pin 18 is drawn outward with respect to the casing so as to give the spring full play, whereby the stamping frame 12 is released and can be swung upward into the position indicted in Fig. 3, and consequently the type of the stamp is rendered both visible and accessible. The type-wheel 19 which serves to check the operator can be adjusted, instead of by a single rack 21, in certain cases by special press-knobs which are so arranged that by pressing on one of these knobs the type wheel is set at the particular number and the stamping is simultaneously effected. The inked ribbon, instead of being moved over the pressure plate by hand can, if desired, be fed automatically by means of a feed motion derived from the motion of the stamp; and finally, in order that the inked ribbon may remain bright for a longer time it may be guided over special inking rollers.

What I claim is:

1. In combination with a fixed pressure plate and an inked ribbon on the same, a frame pivoted at one end for rising and falling, a spring for lifting said frame on its pivot, a fixed stop to limit the upward movement of said frame, a pin carried by the latter and adjustable in position toward said stop for engagement therewith or from said stop into inoperative position to allow easy access and inspection of the stamp, and printing wheels carried by said frame.

2. In combination with a fixed pressure plate and an inked ribbon on the same, a frame pivoted for rising and falling and provided with printing means acting on said ribbon, a spring for lifting said frame, a stop to limit the upward movement of the latter, a pin carried by said frame and adjustable at will into and out of position to engage said stop, the latter adjustment allowing easy inspection of the stamp.

In testimony whereof, I have signed my name to this specification in the presence of two subscribing witnesses.

ADAM DONNER. [L. S.]

Witnesses:
ALBERT NUFER,
FRANCES NUFER.

Copies of this patent may be obtained for five cents each, by addressing the "Commissioner of Patents, Washington, D. C."