Oct. 16, 1951 E. F. ANDREWS 2,571,514

PORTABLE ELECTROACOUSTICAL APPARATUS

Filed March 17, 1947 2 SHEETS—SHEET 1

Fig. 1

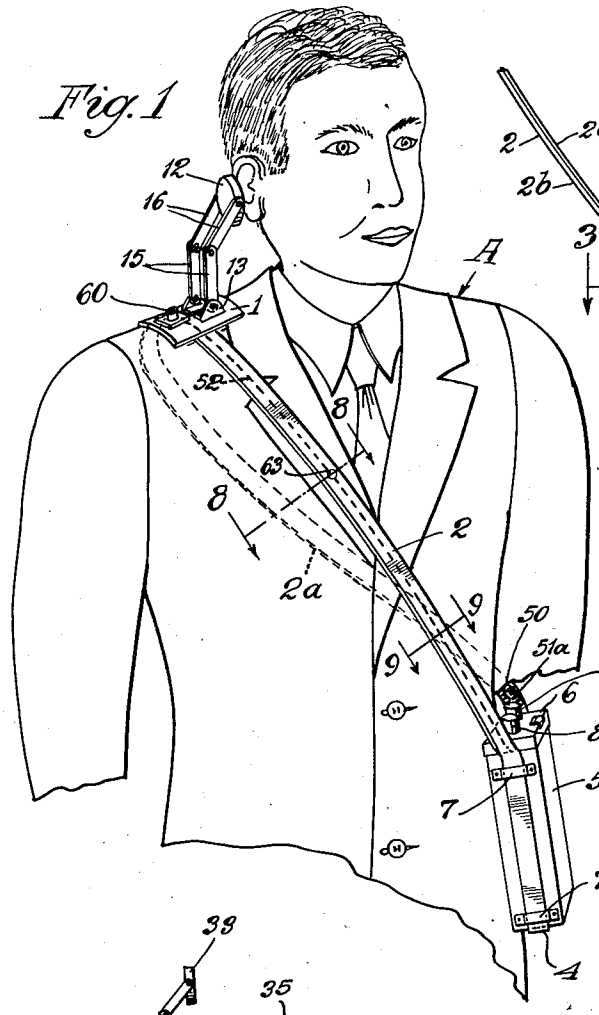

Fig. 2

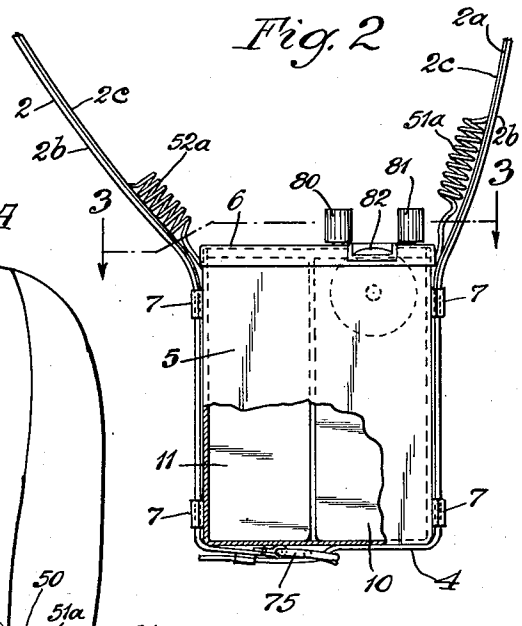

Fig. 3

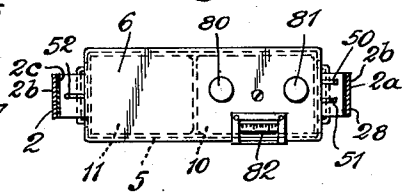

Fig. 8

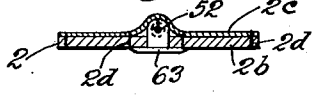

Fig. 9

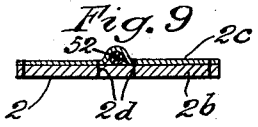

Fig. 10

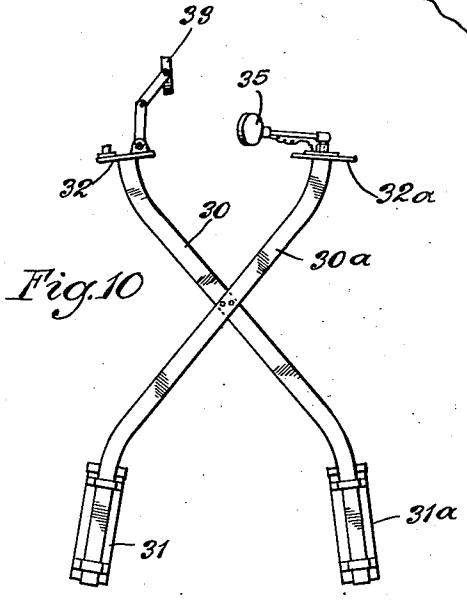

Inventor
Edward F. Andrews
by Parker & Carter
Attorneys

Oct. 16, 1951 E. F. ANDREWS 2,571,514

PORTABLE ELECTROACOUSTICAL APPARATUS

Filed March 17, 1947 2 SHEETS—SHEET 2

Fig. 4

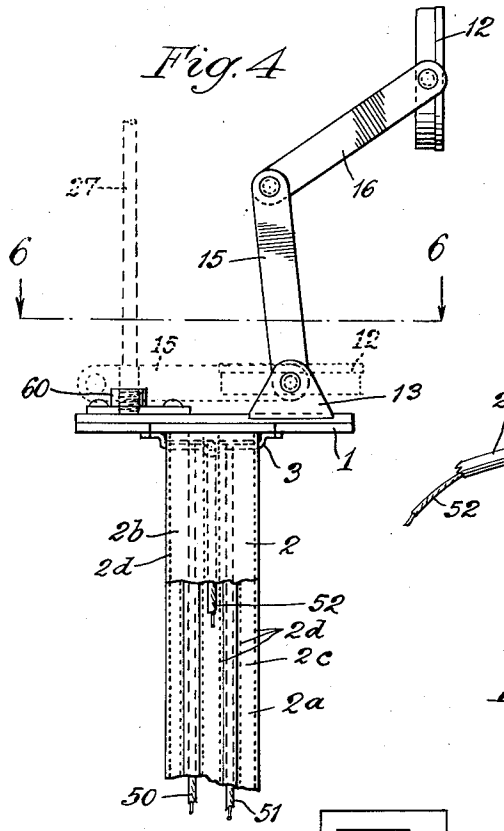

Fig. 5

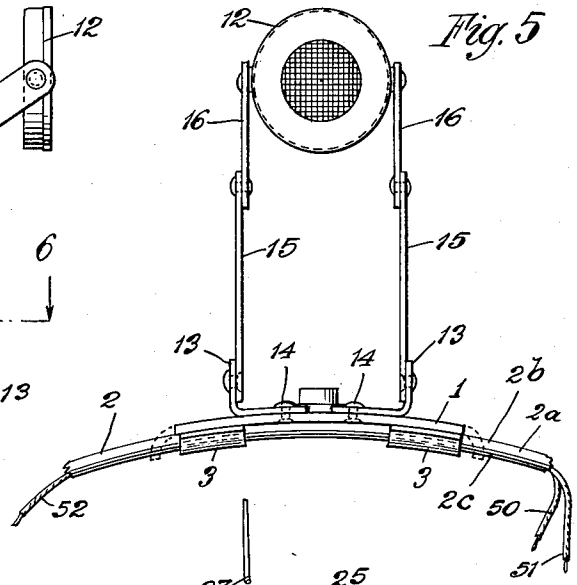

Fig. 7

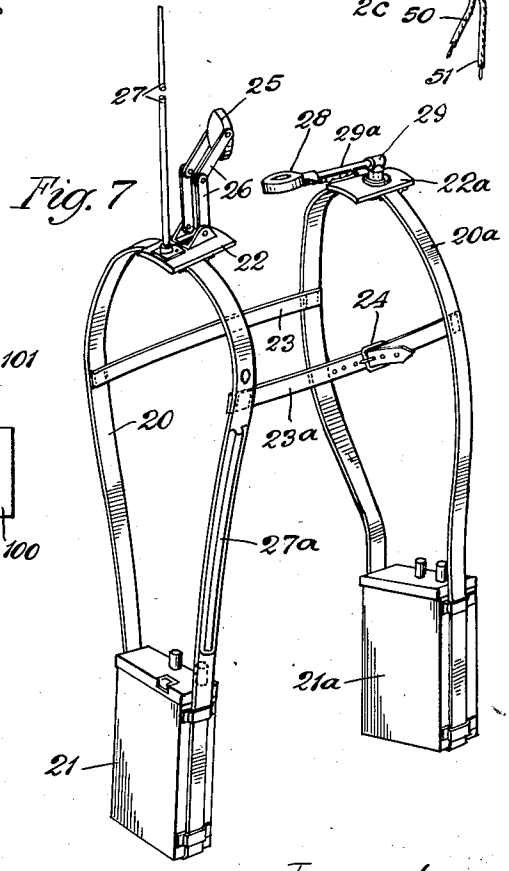

Fig. 6

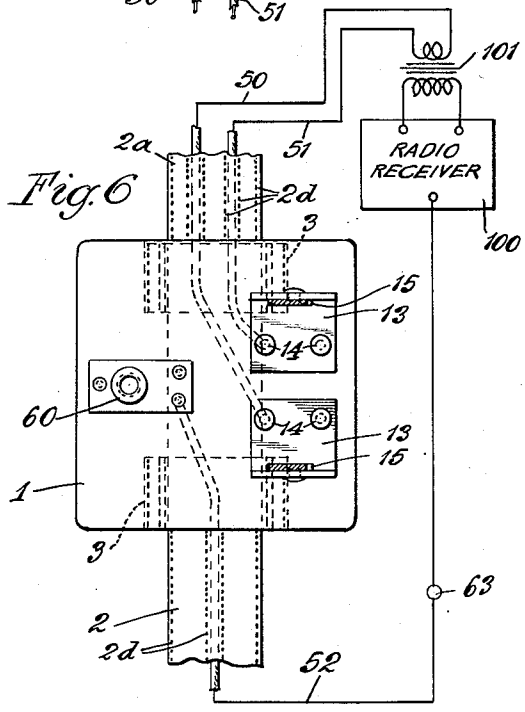

Inventor
Edward F. Andrews
by Parker & Carter
Attorneys.

Patented Oct. 16, 1951 2,571,514

UNITED STATES PATENT OFFICE

2,571,514

PORTABLE ELECTROACOUSTICAL APPARATUS

Edward F. Andrews, Chicago, Ill.

Application March 17, 1947, Serial No. 735,078

14 Claims. (Cl. 250—14)

1

My invention relates to portable electro-acoustical apparatus, including portable radio apparatus.

One purpose is to provide improved portable electro-acoustical apparatus adapted to be operated and transported on the person of the operator.

Another purpose is to provide electro-acoustical apparatus in which heavier parts of the apparatus are employed to maintain other parts of the apparatus in predetermined relation to the head of the operator.

Another purpose is to provide electro-acoustical apparatus in which speakers, microphones and the like are conveniently positioned in relation to the head of the user.

Another purpose is to provide improved antenna means for portable radio apparatus, which is held erect and positioned by the heavier parts of the apparatus.

Another purpose is to provide an electro-acoustical apparatus having an electro-acoustical transducer mounted on the shoulder engaging upper portion of a support, and positioned relative to the operator's head by a lower and heavier part of the same structure.

Another purpose is to provide a support for an electro-acoustical transducer which constitutes both a mechanical and electrical connection to a lower, heavier part of the same apparatus.

Other purposes will appear from time to time in the course of the specification and claims.

I illustrate my invention more or less diagrammatically in the accompanying drawings, wherein:

Figure 1 is a perspective illustrating an embodiment of my invention;

Figure 2 is an elevation, with parts in section, illustrating part of the structure of Figure 1;

Figure 3 is a section on the line 3—3 of Figure 1;

Figure 4 is a side elevation on an enlarged scale, with parts broken away, of the upper portion of the structure shown in Figure 1;

Figure 5 is a partial front view of the structure shown in Figure 4;

Figure 6 is a section on the line 6—6 of Figure 4, including a schematic wiring diagram;

Figure 7 is a perspective view of a variant form of the invention;

Figure 8 is a section on the line 8—8 of Figure 1;

Figure 9 is a section on the line 9—9 of Figure 1; and

2

Figure 10 is a schematic front elevation of another form of the invention.

Like parts are indicated by like symbols throughout the specification and drawings.

Referring to the drawings, A indicates the operator. 1 illustrates a shoulder engaging plate or base which may form part of or be secured to a carrying structure 2, and is preferably of insulating material. As shown in Figure 4, the base 1 is provided with any suitable loop or aperture defining a bracket or brackets 3 through which the carrier 2, which is preferably flexible, may pass. As shown in Figure 5 I illustrate two of these members 3. The carrier may, if desired, be secured to the base 1 by any suitable means, to prevent their unintended relative movement. As shown in Figure 1 a single carrier 2 is employed, which has a rear portion shown in dotted line and indicated at 2a in Figure 1. The two portions are shown as continuous and as forming a bottom loop 4 which may surround any suitable container 5, with its lid 6, and its aperture defining members 7, through which the carrier passes. As will be clear from Figure 1 the member 5 is so located as to be adapted, by its weight, to hold the base 1, or the upper shoulder engaging part of the carrier 2, fixed in predetermined position in relation to the shoulder of the operator, and in relation to his head. An important characteristic of my invention, and of all the forms thereof herein illustrated, is that the flexible carrier 2, or its equivalent, has a depending lower part which supports an apparatus of substantial weight, such as the container 5 and its contents. This weight positions or stabilizes the base 1, or the upper and shoulder engaging part of the carrier 2, and permits it to support upwardly extending members in a predetermined relation to the head of the operaor.

With reference to the embodiment of the invention as shown in Figure 1 and following, I may employ, within the container 5, a radio receiving apparatus diagrammatically indicated at 10. The container 5 may also carry any suitable batteries 11. Thus the container 5 holds the heavy portion of a radio outfit, and employs the heavy portion to stabilize a platform or base upon which other portions of the radio outfit may be positioned. With further reference to Figure 1, I illustrate an earphone or speaker generally indicated at 12. This speaker is shown in some detail in Figures 4 and 5, and is mounted on the base 1 by means of bracket lugs 13 secured by bolts or rivets 14. Pivoted to each lug 13 is a link 15. Pivoted to the upper links 15 are addi-

tional links 16, between the outer ends of which are pivoted the speaker 12. Preferably the above described parts are pivoted together by frictional joints, whereby the speaker 12 will stay in the position of adjustment in which it is set. It may normally be positioned adjacent the ear of the operator, as shown in Figure 1, or it may be depressed to the collapsed or dotted line position in which the parts are shown in Figure 4. The operator can set the speaker 12 where he wishes it, and can control the loudness with which he hears its signal by varying its distance from his ear. Thus, the member 12 may operate either like a headphone, or like a loudspeaker, depending on whether the signal is loud or faint, and on whether or not the listener wishes to prevent others from listening in. For example, he can tune down the radio, and then set the speaker 12 close to his ear, to operate as an earphone.

With further reference to Figure 4, it will be further understood that when the member 12 is out of use, it can be inverted in the flat position, to prevent exposure or damage by sun or rain. Also, it may be set at any desired angle, when it is in contact with or closely approaching the base portion 2, and, in such position, can serve as a loudspeaker. Whereas in Figures 4 and 5 is shown a pair of linkage connections, it will be understood that a single linkage connection may be employed. In that event, an additional wire can be used. The support 2 constitutes both a mechanical and an electrical connection between the apparatus 10 and the speaker 12, as will be later pointed out.

With reference to the form of Figure 7, I illustrate an alternative structure in which two separate carriers or supports 20, 20*a* each support at their lower end a container 21 or 21*a*. At the upper shoulder engaging portion of 20 and 20*a* are base portions 22 and 22*a*. The supports 20 and 20*a* are cross-connected by cross members 23 and 23*a*, of which the latter is provided with a connecting buckle 24, for convenience in applying or removing the equipment from the operator.

Mounted on the base 22 is a speaker 25, adjustably mounted on the linkage generally indicated as 26. I also illustrate a whip or rod type antenna 27 which may be positioned either on the base 22 or on the base 22*a*. The antenna may be of any desired length. If of light material, it can be made of substantial height, resulting in an increased pick-up. I may, for example, employ a whip antenna of aluminum as high as 6 feet. Positioned on the base 22*a* I illustrate a microphone 28. The microphone is preferably adjustable to any desired position in relation to the mouth. I diagrammatically illustrate a swivel connection 29 and an intermediate rod or supporting element 29*a*, whereby the microphone is adjustable to a sidewise position in relation to the mouth. It will be realized that a wide variety of supporting and adjusting means may be employed. The same is true of the particular supporting and adjusting means illustrated in connection with the speakers 12 or 25.

With reference to the form of Figure 10, the support structure is generally equivalent to the form of Figure 7 but individual supports 30 and 30*a* are used, which cross the body in the same baldric fashion as the single support 2. Each of the members 30 or 30*a* has its supported container 31 or 31*a* and its top shoulder engaging portion or base 32 and 32*a*, on which are positioned the speaker 33 and the microphone 35. As above states, in connection with the other figures, it will be understood that the details of support and adjustment of microphone and speaker may be widely varied. The form of Figure 10 may be advantageously employed in connection with a portable voice recording and reproducing apparatus. One of the supported containers may carry recording and reproducing apparatus and the other may carry the appropriate batteries, the batteries and the recording and reproducing apparatus being provided with any suitable conductive connections which include the speaker and the microphone in any suitable recording and reproducing system.

Whereas I have illustrated a whip antenna 27 in Figure 7, it will be understood that in various forms of my invention I may employ either a whip antenna, or an antenna forming part of the carrier, or both. Thus in Figure 1 I illustrate at 60 an antenna inlet which may be used if desired.

With reference to the conductive connections and the conductive portions of the device, the carrier 2 may be of any suitable material which is either electrically insulating or can support electric insulation. I illustrate for example insulated conductors 50, 51 and 52. The number and arrangement of conductors depends upon the particular apparatus employed. For example in Figures 8 and 9, which are sections on the lines 8—8 and 9—9 of Figure 1, I illustrate but a single conductor, the aerial conductor 52. The carrier, as shown in Figures 8 and 9 includes a relatively thick flexible strip 2*b* and a somewhat thinner flexible strip 2*c* stitched or otherwise secured to 2*b* as by stitching 2*d*.

With reference to Figure 6, 100 indicates any suitable radio receiver apparatus, the details of which do not in themselves form part of the present invention and are therefore not indicated. 101 indicates any suitable step-down transformer. However, a transformer need not necessarily be employed, and I do not wish to limit myself to any particular receiver.

In Figure 6 the conductors 50 and 51 are shown in circuit with the coil of a transformer 101. The conductor 50 extends to one of the brackets 13 and the conductor 51 to the other. The relation of these brackets to the speaker or earphone 12 is illustrated in Figure 5. The brackets are insulated apart on the base 1, which is of insulating material. The two brackets and their linkages therefore constitute conductive connections for putting the speaker 12 in circuit with the radio receiver or with its transformer. The antenna conductor 52 extends to any suitable socket 60. It will be understood that while the conductor 52 may itself constitute a sufficient antenna, an additional antenna, for example of the whip type, may be inserted in the socket 60. In Figure 8 I illustrate a button 63, electrically connected to the antenna wire 52, whereby the operator may obtain an increased antenna effect by merely applying his finger to the button.

It will be understood that similar wiring arrangements may be employed in alternative application of my invention. Thus in the form of Figure 7 any suitable wiring may be employed to connect the microphone 28 with its associated electric apparatus. It will be understood that any suitable conductive cross-connections may be employed on the straps 23 or 23*a*. Similarly, any suitable circuit may be used with the form

of Figure 10, and the carrier strips **30** and **30***a* may be conductively cross-connected in any suitable fashion.

Note that in Figure 7 a pocket **27***a* is provided into which the antenna may be inserted. This is particularly convenient where a telescopic antenna is employed which can be entirely received within the pocket **27***a*.

The carriers may be adjustable and may, for example, be provided with the buckle arrangement indicated at **75** in Figure 2. In order to permit such adjustment, I may employ coiled exposed conductor ends, as at **51***a* and at **52***a* of Figure 2.

I may also employ any suitable means for setting or adjusting the receiving or transmitting sets in Figures 2 and 3, for example, knobs **80** and **81** and the tuning dial **82**.

It will be realized that whereas I have described and shown a practical and operative device, and several modifications thereof, nevertheless many changes may be made in the size, shape, number and disposition of parts, without departing from the scope of my invention. I therefore wish my description and drawings to be taken as in a broad sense illustrative or diagrammatic, rather than as limiting me to the specific showing herein.

It will be understood that I employ the term "electro-acoustical apparatus" to include but not to be limited to one-way or two-way radio equipment, and recording and reproducing equipment.

The use and operation of my invention are as follows:

I illustrate broadly a system of mounting electro-acoustical apparatus or electro-magnetic apparatus on the person of an operator.

Taking one typical example, the structure of Figure 1, I may mount a radio receiving mechanism in a container at the lower end of the flexible support **2**, employing the single flexible support also to position the speaker base and speaker, so that the speaker is in proper relation to the head or ear of the user.

I may also provide an antenna on the speaker base, and this antenna is also held, in proper erect position, by the weight of the set at the bottom of the flexible support **2**.

It will be understood that my invention lends itself equally well to electro-mechanical or electro-magnetic mechanisms, such as sound recorders and reproducers. If I employ the form of Figure 1 for that purpose, with the recorder and reproducer equipment in the container **5**, I may find it advantageous to employ a single member, which will serve both as a microphone and as a speaker. Members of a wide variety of structure may be employed for this purpose. I may for example, take the structure of Figure 4 and swivel the bottom member **13**. In that event, it might be preferable to use but a single linkage. By swiveling the single bottom member **13**, at the securing point **14**, I then obtain a sufficient flexibility of mounting of the member **12** to permit it to be positioned in front of the mouth of the user, as a microphone, or in front of the ear of the user, as a speaker.

In relation to the form of carrier of Figure 7, I find it advantageous, under some circumstances, to employ a belt connected to the containers **21** and **21***a*, which holds them snugly against the body, even when the user is walking fast or running. This is advantageous for example in connection with the use of my invention in military operations or formations.

It will be understood, of course, that a belt may be used in connection with a single container, as in Figure 1. In such event, the belt assists in stabilizing and positioning the top support **1**, to hold the transducer in proper position.

In all forms of my invention herein shown, it will be understood that I may employ separate containers for batteries, if desired.

I claim:

1. In an electro-acoustical apparatus transportable and operable on the person of an operator, a carrying and connecting member having a shoulder engaging upper portion and a depending lower portion, a speaker mounted on said shoulder engaging upper portion, and a radio receiver of greater weight than said speaker carried by said lower portion, and electrically conductive means associated with said member, connecting said radio receiver to said speaker, said speaker, radio receiver and carrying and connecting member forming a unitary structure supportable from the shoulder of an erect operator with said radio receiver of greater weight at the bottom being adapted to maintain the unitary structure in gravitally stable equilibrium with said speaker stably positioned thereby in predetermined position in relation to the head and shoulder of the user.

2. In radio apparatus transportable and operable on the person of an operator, a strap like carrying and connecting means having a shoulder engaging upper portion and a depending lower portion, an antenna mounted on said shoulder engaging upper portion and having a substantial generally vertical extension thereabove, a radio apparatus of substantial weight, carried by said lower portion and connected electrically and mechanically to said antenna by said carrying and connecting means, the weight of said radio apparatus being sufficient in relation to the weight of said antenna to hold said shoulder engaging upper portion with the antenna in predetermined relation to the shoulder of the operator.

3. In an electro-acoustical apparatus transportable and operable on the person of an operator, strip-like carrying and connecting means having a shoulder engaging upper portion, and a depending lower portion, an electro-acoustical transducer mounted on said shoulder engaging upper portion, apparatus of a weight greater than that of the transducer carried by said lower portion, conductive means connecting said transducer and said last mentioned apparatus, said transducer, apparatus and carrying and connecting means forming a unitary structure supportable from the shoulder of an erect operator with said apparatus of greater weight at the bottom and providing gravitally stable equilibrium, with said transducer stably positioned thereby adjacent the head of the user.

4. In an electro-acoustical apparatus transportable and operable on the person of an operator, strap like carrying and connecting means having a shoulder engaging upper portion and a depending lower portion, a speaker mounted on said shoulder engaging upper portion and positioned thereby relative to the operator's ear, a radio receiver of substantial weight, carried by said lower portion and connected electrically and mechanically to said speaker by said carrying and connecting means, and supporting means for said speaker adapted to permit a sub-

stantial adjustment of said speaker toward and away from the ear of the user, the weight of said radio receiver being sufficient in relation to the weight of said speaker to maintain the speaker by gravity upon the shoulder of the user and in the general vicinity of the user's ear.

5. In an electro-acoustical apparatus transportable and operable on the person of an operator, strap like carrying and connecting means having a shoulder engaging upper portion and a depending lower portion, a speaker mounted on said shoulder engaging upper portion and positioned thereby relative to the operator's ear, apparatus of substantial weight, carried by said lower portion and connected electrically and mechanically to said speaker by said carrying and connecting means, and supporting means for said speaker adapted to permit a substantial adjustment of said speaker toward and away from the ear of the user, said apparatus including a radio receiver, said connecting means including a portion adapted to serve as antenna for said radio receiver, the weight of said apparatus being sufficient in relation to the weight of said speaker to maintain the speaker gravitally in the general vicinity of the ear of the user.

6. In radio apparatus transportable and operable on the person of an operator, strap like carrying and connecting means having a shoulder engaging upper portion and a depending lower portion, an antenna mounted on said shoulder engaging upper portion and having a substantial generally vertical extension, a speaker mounted on said upper portion, a radio apparatus of greater weight than said antenna and speaker, carried by said lower portion and connected electrically and mechanically to said antenna and to said speaker by said carrying and connecting means, said radio apparatus being adapted by its weight to hold said antenna in upright position, with said speaker in predetermined relation to the ear of the operator, the said carrying and connecting means, with the transducer and the radio apparatus, constituting a unitary structure supportable from the shoulder of an erect operator, the apparatus of greater weight being adapted to maintain said unitary structure in gravitally stable equilibrium.

7. In radio apparatus transportable and operable on the person of an operator, strap like carrying and connecting means having a shoulder engaging upper portion and a depending lower portion, an antenna mounted on said shoulder engaging upper portion and having a substantial generally vertical extension, a speaker mounted on said upper portion, a radio apparatus of substantial weight, carried by said lower portion and connected electrically and mechanically to said antenna and to said speaker by said carrying and connecting means, the weight of said radio apparatus being sufficient in relation to the weight of said speaker and antenna to hold said antenna in upright position, with said speaker in predetermined relation to the ear of the operator, and supporting means for said speaker adapted to position said speaker for a substantial range of adjustment toward and away from the ear of the operator.

8. In an electro-acoustical apparatus transportable and operable on the person of an operator, a pair of carrying and connecting straps each having a shoulder engaging upper portion and a depending lower portion, a microphone mounted on one of said shoulder engaging upper portions and an earphone mounted on the other, an apparatus of substantial weight, carried by each said lower portion, and connected electrically and mechanically to said microphone and earphone by said carrying and connecting means, at least one of said lower portions containing radio apparatus, said apparatus being of sufficient weight in relation to the weight of the microphone and the earphone to maintain the microphone and earphone gravitally positioned upon the shoulders of the operator and an antenna mounted on one of said shoulder portions, said apparatus being adapted by its weight to maintain the carrying and connecting straps and the microphone and earphone in gravitally stable equilibrium, with said microphone and earphone in predetermined position in relation to the shoulder and head of the user.

9. In an electro-acoustical apparatus transportable and operable on the person of an operator, a pair of carrying and connecting straps each having a shoulder engaging upper portion and a depending lower portion, electro-acoustical transducers mounted on each said shoulder engaging upper portion, an apparatus of greater weight than each said transducer, carried by each said lower portion, and connected electrically and mechanically to one or more of said transducers by said carrying and connecting means, the weight of said apparatus being adapted and positioned gravitally to maintain the carrying straps and the electro-acoustical transducer in stable, gravital equilibrium, with the transducer in predetermined position upon the shoulder of the operator, said connecting means having conductive portions conductibly connected to each other.

10. In an electro-acoustical apparatus transportable and operable on the person of an operator, strap-like carrying and connecting means having a shoulder engaging upper portion and a depending lower portion, transducer means adjustably mounted on said shoulder engaging upper portion, adapted to act as a microphone and as a speaker, a recording and reproducing apparatus supported on a lower portion of said carrying and connecting means, said carrying and connecting means constituting a mechanical and an electrical connection between said apparatus and said transducer, and a supporting connection for said transducer adapted to position said transducer selectively at widely various positions in relation to the ear and mouth of the operator, said recording and reproducing apparatus being of greater weight than the transducer, the strap-like carrying and connecting means being adaped to move freely in response to the gravital pull of the excess weight of the recording and reproducing apparatus whereby, in response to such weight differential, the shoulder engaging upper portion of the strap-like carrying and connecting means and the transducer are gravitally held by the recording and reproducing apparatus in a predetermined position in relation to the shoulder and head of the user.

11. In an electro-acoustical apparatus transportable and operable on the person of an operator, a transducer, a support for said transducer adapted to be positioned upon the shoulder of the operator, and an adjustable connection between said support and said transducer formed and adapted to adjust said transducer into a variety of maintainable positions nearer to or farther from the ear of the operator, and means for holding said support in predetermined po-

sition upon the shoulder of the operator including a flexible strap like member extending over the shoulder of the operator and apparatus of substantial weight carried by the lower portion of said strap like member adapted by its weight and its position on said flexible strap like member gravitally to position and hold said support, at the upper end of said strap like member, upon the shoulder of the operator, said adjustable connection including a pair of links the first of said links being pivoted to said support at one end and to a second link at the other, said second link being pivoted to the transducer, the pivotal connections between the two links and between each link and the transducer having generally parallel and generally horizontal axes.

12. In an electro-acoustical apparatus transportable and operable on the person of an operator standing in an erect position, a carrying and connecting member having a shoulder engaging upper portion and a depending lower portion, an electro-acoustical transducer mounted on the shoulder engaging upper portion, an apparatus of greater weight than the transducer carried by said lower portion and connected to said transducer and positioned and adapted to maintain the carrying and connecting member, together with the electro-acoustical transducer and the apparatus of greater weight, in a condition of stable gravital equilibrium with the transducer in predetermined relation to the operator's head, and electrically conductive means associated with said connecting member, and connecting said last mentioned apparatus to said transducer.

13. In an electro-acoustical apparatus transportable and operable on the person of an operator standing in an erect position, a carrying and connecting member having a shoulder engaging upper portion and a depending lower portion, an electro-acoustical transducer mounted on the shoulder engaging upper portion, an apparatus of greater weight than the transducer carried by said lower portion and connected to said transducer and positioned and adapted to maintain the carrying and connecting member, together with the electro-acoustical transducer and the apparatus of greater weight, in a condition of stable gravital equilibrium with the transducer in predetermined relation to the operator's head, and electrically conductive means associated with said connecting member, and connecting said last mentioned apparatus to said transducer, said electro-acoustical transducer including an ear piece adjustable toward and away from the ear of the operator.

14. An electro-acoustical apparatus transportable and operable on the person of an operator, including a separate transducer unit of light weight and a stabilizing main unit of greater weight, a positioning and connecting member including associated electro-conductive means having an upper portion passing over and engaging the shoulder of an erect operator and a lower portion extending downward from the upper portion substantially below the operator's armpit, means for connecting and mounting said transducer unit on and above said upper portion, means for connecting and supporting said stabilizing unit from and below said lower portion, whereby said units are electrically connected and the greater weight of said stabilizing unit tends to position and maintain the lighter transducer unit in fixed relation to the head of the operator requiring that the heavier stabilizing unit be raised against the force of gravity to effect substantial displacement of the transducer unit.

EDWARD F. ANDREWS.

REFERENCES CITED

The following references are of record in the file of this patent:

UNITED STATES PATENTS

Number	Name	Date
306,296	Vail	Oct. 7, 1884
1,993,436	Eberhard	Mar. 5, 1935
2,101,033	Mashber	Dec. 7, 1937
2,285,083	Cover	June 2, 1942
2,348,138	Latus	May 2, 1944

FOREIGN PATENTS

Number	Country	Date
228,675	Great Britain	Feb. 12, 1925
614,342	France	Dec. 11, 1926
333,262	Italy	Dec. 14, 1935
360,932	Italy	July 8, 1938

OTHER REFERENCES

Popular Science Monthly, August 1938, page 78.

Popular Science Monthly, December 1936, page 40.