(No Model.) 3 Sheets—Sheet 1.

D. IRONS.

CORNICE BRAKE AND FOLDER.

No. 590,264. Patented Sept. 21, 1897.

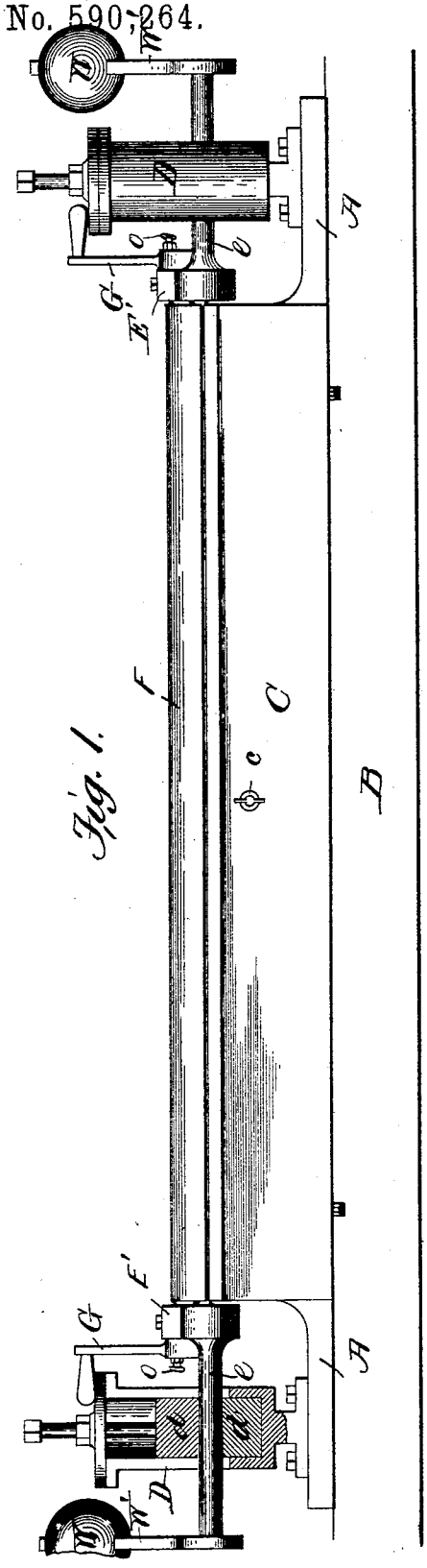

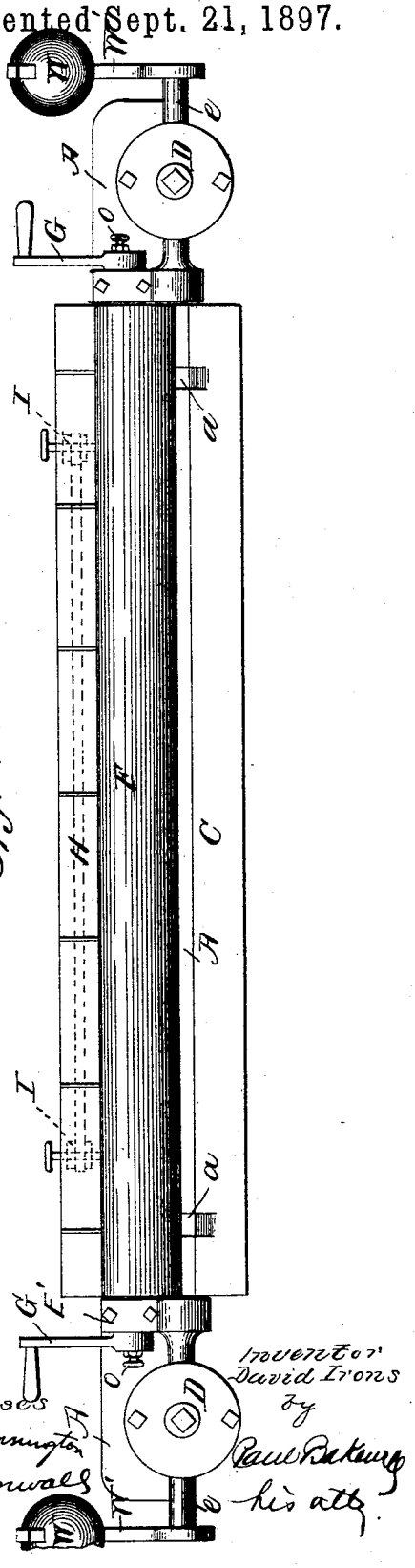

Witnesses
A. A. Pennington
G. R. Cornwall

Inventor
David Irons
by
Paul Bakewell
his atty.

THE NORRIS PETERS CO., PHOTO-LITHO., WASHINGTON, D. C.

(No Model.) 3 Sheets—Sheet 2.

D. IRONS.

CORNICE BRAKE AND FOLDER.

No. 590,264. Patented Sept. 21, 1897.

Fig. 3.

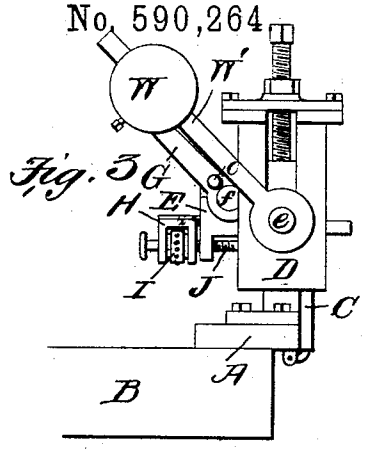

Fig. 4.

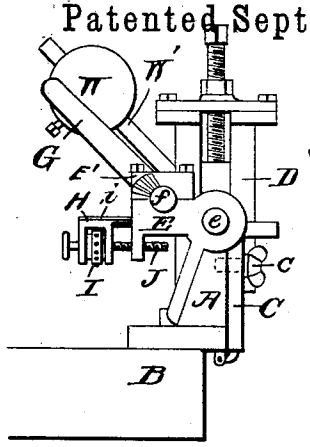

Fig. 5.

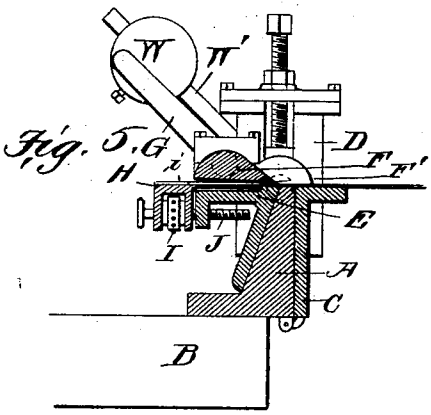

Fig. 6.

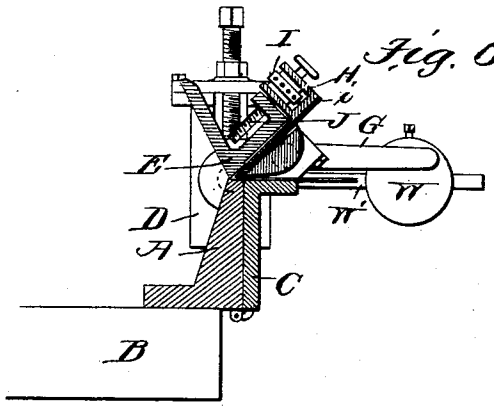

Fig. 7.

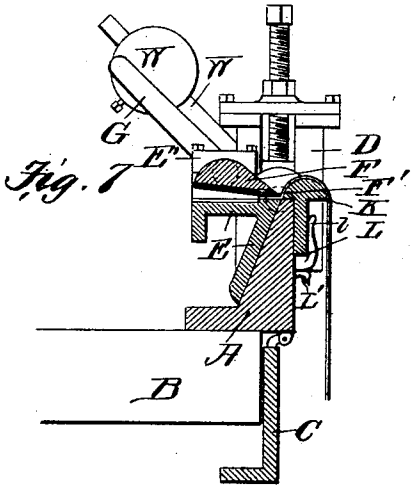

Fig. 8.

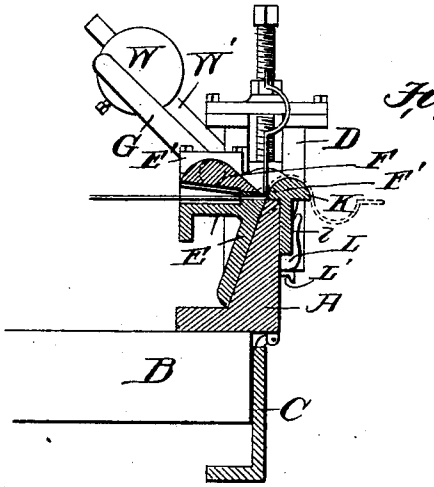

Witnesses:
G. A. Pennington
J. R. Cornwall

Inventor
David Irons
By Paul Bakewell
his atty.

THE NORRIS PETERS CO., PHOTO-LITHO., WASHINGTON, D. C.

(No Model.) 3 Sheets—Sheet 3.

D. IRONS.

CORNICE BRAKE AND FOLDER.

No. 590,264. Patented Sept. 21, 1897.

Fig. 9.

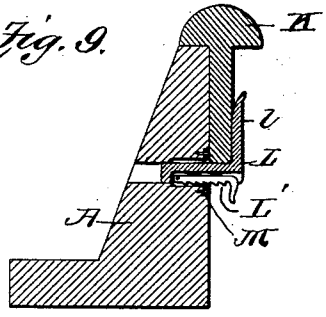

Fig. 10

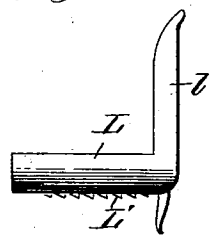

Fig. 11

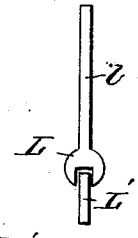

Fig. 12.

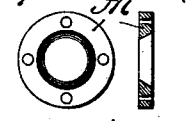

Fig. 13

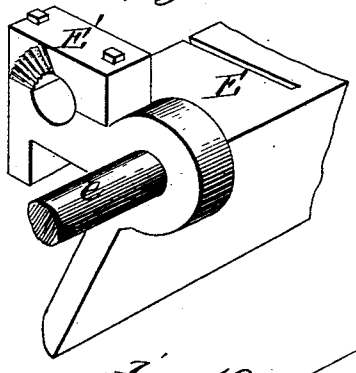

Fig. 14

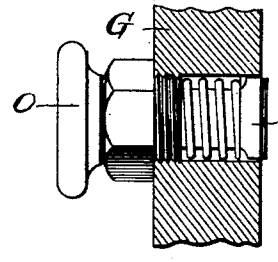

Fig. 15.

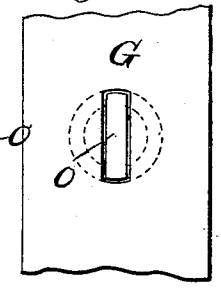

Fig. 16

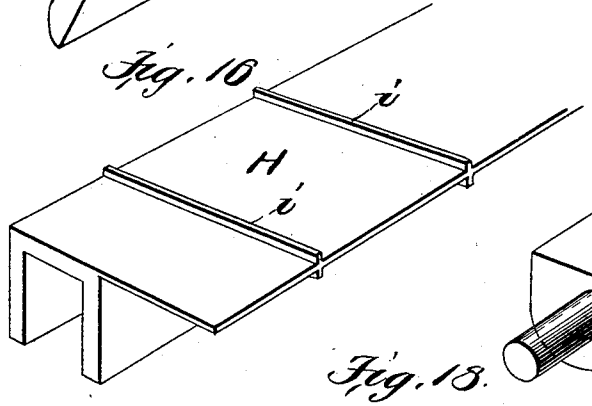

Fig. 17.

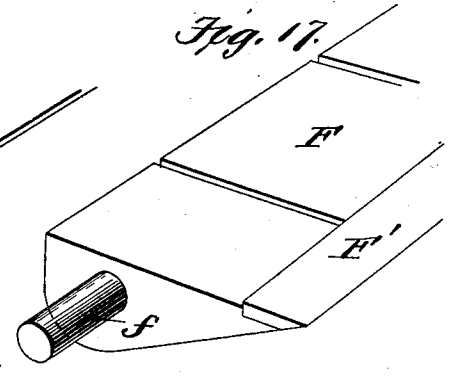

Fig. 18.

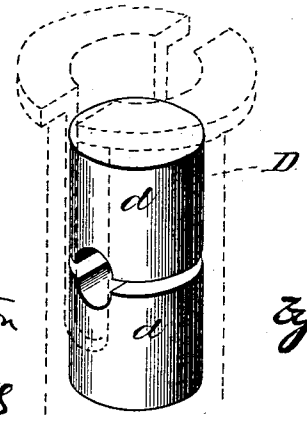

Witnesses:
G. A. Pennington
G. R. Conway

Inventor:
David Irons
By Paul Bakewell
his atty

THE NORRIS PETERS CO., PHOTO-LITHO., WASHINGTON, D. C.

UNITED STATES PATENT OFFICE.

DAVID IRONS, OF ST. LOUIS, MISSOURI, ASSIGNOR OF ONE-HALF TO EDWARD W. DIETERLE, OF SAME PLACE.

CORNICE-BRAKE AND FOLDER.

SPECIFICATION forming part of Letters Patent No. 590,264, dated September 21, 1897.

Application filed March 8, 1897. Serial No. 626,437. (No model.)

To all whom it may concern.

Be it known that I, DAVID IRONS, a citizen of the United States, residing at the city of St. Louis, State of Missouri, have invented a certain new and useful Improvement in Cornice-Brakes and Folders, of which the following is a full, clear, and exact description, reference being had to the accompanying drawings, forming a part of this specification, in which—

Figure 1 is a front elevational view of my improved machine. Fig. 2 is a top plan view of the same. Fig. 3 is an end elevational view of the same. Fig. 4 is an end elevational view, the bearing for the folding-frame being removed. Fig. 5 is a cross-sectional view showing a piece of metal in position to be folded. Fig. 6 is a similar view showing the position of the parts in the act of folding the metal. Fig. 7 is a sectional view showing the invention used as a cornice-brake. Fig. 8 is a similar view showing the method of forming a compound or an ogee curve in a cornice. Fig. 9 is a sectional view through the frame, showing the manner of supporting the braking-forms for cornice-molds. Fig. 10 is a side elevational view of the form-support. Fig. 11 is an end elevational view of the same. Fig. 12 represents a face view and sectional view of a ring with which the form-support coöperates. Fig. 13 is a detail view of a portion of the folding-frame. Fig. 14 is a sectional view through the folding-frame handle, showing the manner in which the handle may be locked. Fig. 15 is an inner face view of the handle, showing the lock. Fig. 16 is a detail view of a portion of the stop-plate for the metal, which is used when the metal is to be folded. Fig. 17 is a detail view of a portion of the clamp mounted on the folding-frame, the bottom of said clamp showing the grooves for coöperating with the ribs of the stop-plate. Fig. 18 is a detail view of the bearing for the folding-frame.

This invention relates to a new and useful machine to be used in bending metal to form flanges at the edges thereof, such as the flanges on roofing-plates and the like, and also a machine to be used for forming molding in metal for cornice-work and the like.

The object of this present invention is to construct a machine of the character described which will be simple, cheap, and easily and readily adapted to perform the work for which it is intended.

The invention consists in the novel construction and arrangement of the folding-frame; the combination of the frame and clamp; the novel lock for the clamp; the combination of the folding-frame, clamp, and stop-plate; the novel support for the brake-form, and, finally, the construction, arrangement, and combination of the several parts, all as will hereinafter be described, and afterward pointed out in the claims.

In the drawings, A indicates a suitable base-plate, which is adapted either to be secured to a table, as B, or mounted upon suitable legs. (Not shown.)

C indicates a table extension pivoted to the under side of base A and held in position by a thumb-nut *c*, which permits the table extension to be raised to an operative position, as shown in Figs. 5 and 6, or be lowered, as shown in Figs. 7 and 8.

D indicates slotted cylinders bolted to the ends of frame A and containing bearing-blocks *d*, which blocks support spindles *e* of a folding-frame E. This folding-frame is substantially the shape of a figure 7, its upper inner edge coöperating with the edge of the frame A, which edges are in line with the axis of the spindles *e*. The ends of this folding-frame are provided with suitable boxes E′, in which boxes are mounted spindles *f* of a clamp F, the forward edge of which clamp is preferably faced with a hard-metal strip F′, which coöperates with the metal to hold the same against the folding-frame when the folding-frame is revolved to bend the metal, as shown in Fig. 6.

G indicates handles mounted on the outer ends of the spindles *f*, so that when the metal to be bent is placed under the clamp and the handles G moved forward the clamp grasps the metal, holding it tightly against the folding-frame, and a continued movement of the handle in a forward direction causes the folding-frame to be tilted over, which thereby forms the flange along the edge of the sheet so clamped. In the event that it is de-

sired to form a flange on a sheet at right angles to a flanged edge the upper edge of frame A and the table C are grooved, as at *a*, (see Fig. 2,) to afford a reception for the flanged edge of the sheet.

H indicates a stop-plate, whose construction is shown more clearly in Fig. 16. This stop-plate has two downwardly-extending flanges, between which are supported sprocket-wheels I, connected by a suitable chain or belt, which sprocket-wheels are provided with handles by which they may be turned.

J indicates threaded stems connected to the sprocket-wheels, which are received in the downwardly-extending flange at the rear edge of the folding-frame. When the sprocket-wheels are rotated, the stop-plate is adjusted inwardly and outwardly relative to the folding-frame, both threaded stems being rotated in unison by reason of their connection. This stop-plate has ribs *i* arranged on its upper and lower faces, which ribs fit in suitable grooves formed in the folding-frame and clamp, so that when a sheet is introduced to be folded it will be arrested at all points in its length and not be permitted to pass beyond the stop-plate. By adjusting the stop-plate flanges of different heights can be formed.

In folding heavy metal I prefer to arrange a weight W on an arm W′ at the ends of the spindles of the folding-frame, so that when the handles G are pulled forward and the weights moved past dead-center said weights will assist in the final operation of folding. Also when the fold is made and the sheet raised to follow the folder the weight will assist in the final operation of elevating the sheet. The blocks *d* in the cylinders D are divided, as shown in Fig. 18, so that should the bearings become worn the blocks may be removed and the faces planed to make a tight joint, a screw being introduced from above to hold the blocks together.

From the above the operation of forming flanges on sheets of metal is obvious. When it is desired to "brake" a cornice, as it is termed—that is, form moldings in a sheet to be used in cornice-work—the stop-plate at the rear end of the folding-frame is removed and the table C lowered, as shown in Figs 7 and 8. The first operation is to form a flange on the sheet, which can be done in the usual way, as shown in Fig. 7. A form K is now placed in position on the frame A and the sheet bent over, as shown in Fig. 7. The supports for this form, so far as I am aware, are novel, one of them being shown in detail in Figs. 9, 10, and 11. An opening is made through the frame A, the rear end of which is somewhat contracted. The shank of the support L is introduced into this opening until the upward projection *l* rests against the form. Ring M, having an interior beveled edge, is secured around this opening, and a spring-pressed notched member L′, pivoted in a groove in the shank of the support L, cooperates with this ring to hold the support tightly against the form and prevents movement.

In using the machine as a brake it is also necessary to hold the clamp tightly against the sheet of metal being operated upon, and in order to accomplish this in a simple and inexpensive manner I prefer to form teeth in the outer faces of the boxes which support the spindles of the clamp. A spring-pressed bolt O passes through the handle G, its inner end coöperating with the teeth on the box, so that when the handle is pressed forward the bolt will engage the teeth and prevent an upward movement of the clamp. As it is not always desirable to use the clamp in this manner, this bolt is so constructed that its projecting end can be withdrawn, and by slightly turning the bolt it will be locked in its inner position, as is obvious.

Should it be desired to form a compound curve in the sheet, when the first curve is formed, as shown in Fig. 7, the clamp is released, the form-supports taken out, and the form removed. The sheet is now reversed, the straight portion being introduced under the clamp and a bend made, as shown in Fig. 8. The form is now placed in position and the other portion of the curve made in the sheet.

From the above it will be seen that the machine is capable of forming flanges and doing other work required in the manufacture of roofing-plates and other articles made from sheet metal, the machine requiring very little change to adapt it for the different work it has to perform.

I am aware that many minor changes in the construction, arrangement, and combination of the several parts of my device can be made and substituted for those herein shown and described without in the least departing from the nature and principle of the invention.

Having thus described my invention, what I claim, and desire to secure by Letters Patent of the United States, is—

1. The combination with a suitable stationary frame, of a folding-frame, and a clamp pivotally mounted on the folding-frame, the pivotal axis of said folding-frame being coincident with the upper meeting edges of the folding-frame and the stationary supporting-frame; substantially as described.

2. The combination with a stationary frame, of a folding-frame, pivotally mounted in suitable supports and coöperating with the stationary frame, a clamp pivotally mounted on the folding-frame, said clamp coöperating with the folding-frame and the stationary frame, and a handle for operating said clamp and folding-frame; substantially as described.

3. The combination with the frame, of a swinging folding-frame, a clamp pivotally

mounted on said folding-frame, and a stop-plate operating between the clamp and folding-frame; substantially as described.

4. The combination with the frame, of a swinging folding-frame, a clamp pivotally mounted on said folding-frame, a stop-plate operating between the clamp and folding-frame, and means for adjusting said stop-plate relative to the axis of rotation of the folding-frame; substantially as described.

5. The combination with a suitable frame, of a swinging folding-frame, a clamp pivotally mounted on said folding-frame, said folding-frame and clamp being formed with alining grooves in their contiguous faces, and a stop-plate operating between said clamp and folding-frame, said stop-plate being provided with ribs which coöperate with the grooves in the clamp and folding-frame; substantially as described.

6. The combination with a suitable frame, of a swinging folding-frame, a clamp pivotally mounted on said folding-frame, a stop-plate operating between the clamp and folding-frame, sprocket-wheels mounted in said stop-plate and connected by a suitable belt or chain, whereby they may be rotated in unison, and threaded stems secured to said sprocket-wheels, and operating in threaded openings in the folding-frame; substantially as described.

7. The combination with a suitable stationary frame, of a swinging folding-frame coöperating with the stationary frame, a clamp pivotally mounted on said folding-frame, said clamp coöperating with the folding and stationary frames, and means for locking said clamp in position against the metal to be operated upon; substantially as described.

8. The combination with a suitable frame, of a swinging folding-frame, a clamp pivotally mounted on said folding-frame, a handle for operating said clamp, and a lock in said handle for locking the clamp in position; substantially as described.

9. The combination with a suitable frame, of a swinging folding-frame, a clamp pivotally mounted on said folding-frame, a handle for operating said clamp and folding-frame, and a spring-pressed bolt mounted in said handle and coöperating with the folding-frame, for locking the clamp relative to the folding-frame; substantially as described.

10. The combination with a suitable frame, of a swinging folding-frame, a clamp pivotally mounted on said folding-frame, a handle for operating said clamp, and folding-frame, a spring-pressed bolt mounted in said handle, said bolt being adapted to coöperate with the folding-frame for locking the clamp relative to the folding-frame, or be withdrawn within the handle so as to be out of engagement with the folding-frame; substantially as described.

11. The combination with a suitable frame, of a folding-frame, pivotally mounted in suitable supports, a clamp pivotally mounted on said folding-frame, and weighted arms on the spindles of the folding-frame, the weights of which arms are adapted to pass beyond dead-center when the folding-frame is operated; substantially as described.

12. The combination with a suitable frame, of a swinging folding-frame, a clamp pivotally mounted on said folding-frame, a form mounted on the frame, and form-supports coöperating with said frame for holding the form in position; substantially as described.

13. The combination with the frame, of a form, and form-support comprising a grooved shank and a pivoted notched bar in said shank which coöperates with the frame of the machine to hold the form in place; substantially as described.

14. The combination with the frame, of a form, a form-support comprising a grooved shank and a spring-pressed notched locking-bar pivoted in the groove of said shank, a ring fitted in the frame around an opening for receiving the shank, said ring having a beveled edge to coöperate with the notched bar of the form-support; substantially as described.

15. The combination with a suitable frame, of a swinging folding-frame, having spindles at its ends, slotted cylinders through which said spindles pass, bearing-blocks in said cylinders, screws for holding said bearing-blocks in position, the pivotal axis of said folding-frame being coincident with the upper meeting edges of the folding-frame and the supporting-frame; substantially as described.

In testimony whereof I hereunto affix my signature, in presence of two witnesses, this 23d day of February, 1897.

DAVID IRONS.

Witnesses:
HUGH K. WAGNER,
F. R. CORNWALL.