United States Patent [19]

Greer et al.

[11] **3,774,430**

[45] **Nov. 27, 1973**

[54] **METAL FORMING**

[75] Inventors: **Walter D. Greer**, Lynwood; **Richard C. Schlicht**, Seal Beach, both of Calif.

[73] Assignee: **Greer Products, Inc.**, Los Angeles, Calif.

[22] Filed: **Dec. 1, 1967**

[21] Appl. No.: **692,627**

Related U.S. Application Data

[63] Continuation of Ser. No. 511,484, Dec. 3, 1965, abandoned.

[52] **U.S. Cl.** **72/60,** 29/423
[51] **Int. Cl.** **B21d 22/10**
[58] **Field of Search** 72/54, 57, 60

[56] **References Cited**

UNITED STATES PATENTS

1,267,591	5/1918	Rehbein	72/57
1,424,406	8/1922	Hauptmeyer	72/60
2,280,359	4/1942	Trudell	72/60
2,292,462	8/1942	Milford	72/60
2,927,549	3/1960	Derbyshire	72/54

Primary Examiner—Verlin R. Pendegrass
Attorney—John N. Hazelwood, Albert J. Miller, Robert H. Fraser and Robert S. Swecker

[57] **ABSTRACT**

A sheet of material is placed over a die cavity. A ram made of malleable material, such as lead, forces the sheet into the cavity. The force of the ram, progressing inwardly from the edges of the sheet toward the center of the cavity, moves the sheet downward and inward into the cavity, without appreciable change in the thickness of the material at any point. The sheet may thus be worked in cold condition, either in one or a succession of steps, without requiring heat treatment.

23 Claims, 14 Drawing Figures

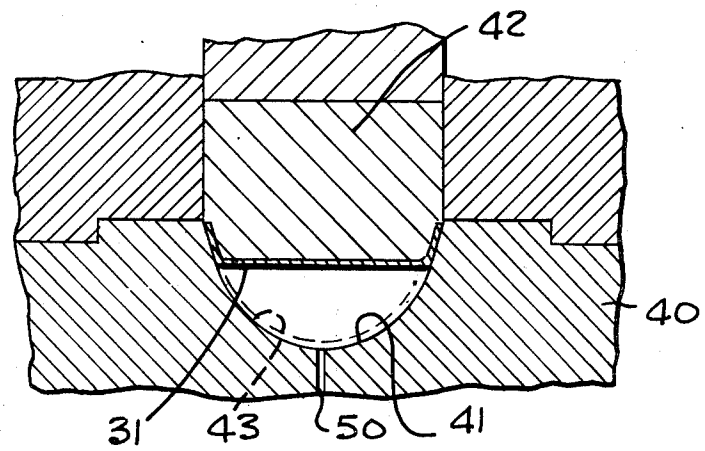

PATENTED NOV 27 1973

3,774,430

SHEET 1 OF 3

Fig. 1

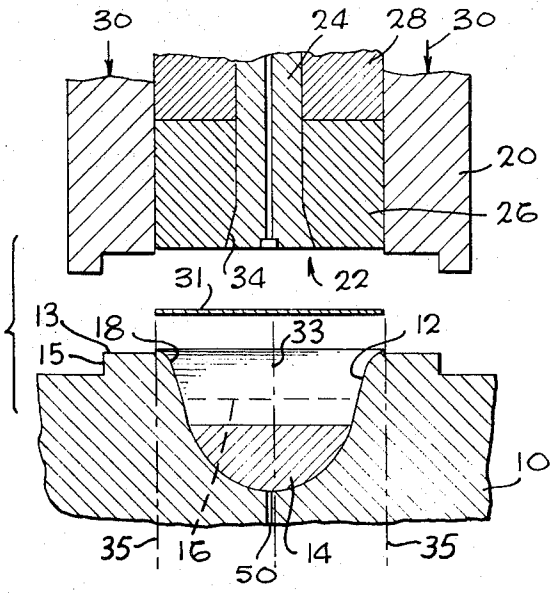

Fig. 2

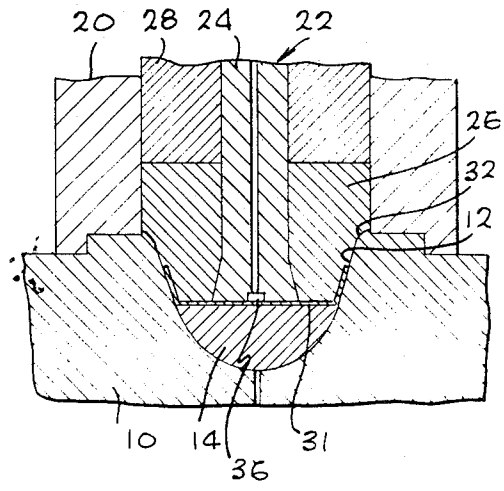

Fig. 3

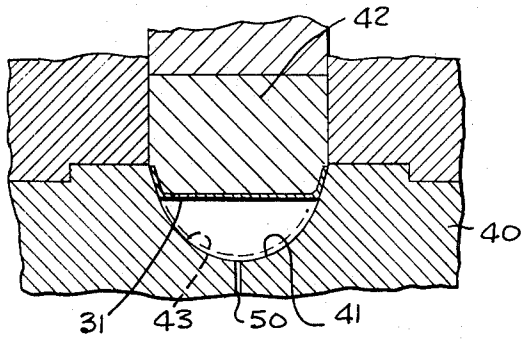

Fig. 4

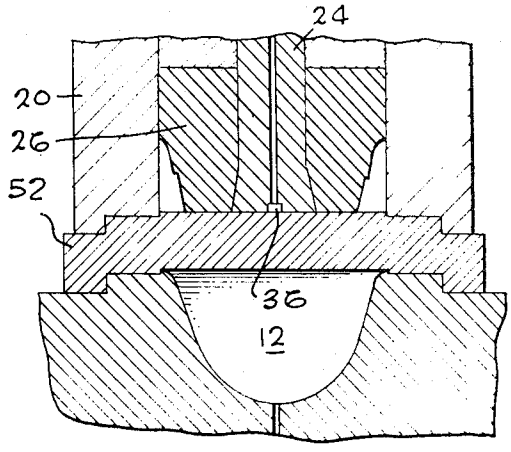

Fig. 5

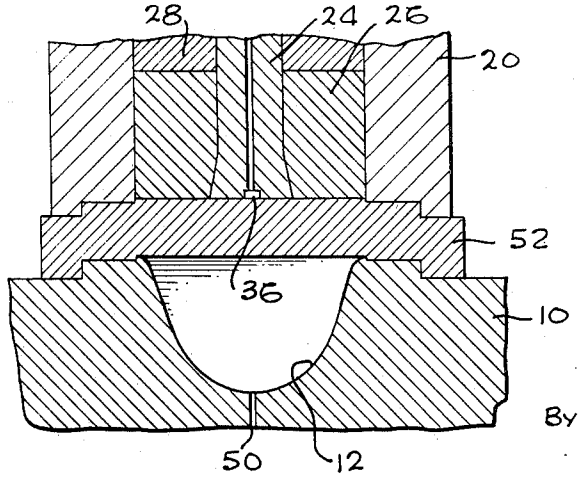

Fig. 6

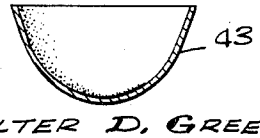

WALTER D. GREER
RICHARD C. SCHLICHT
INVENTORS

BY Warren T. Jessup
ATTORNEY

Fig. 7

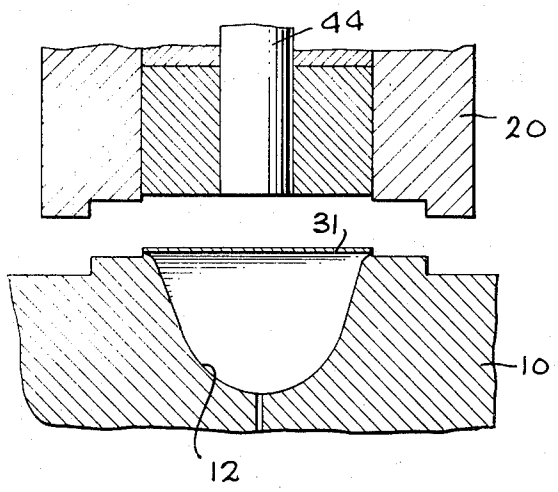

Fig. 8

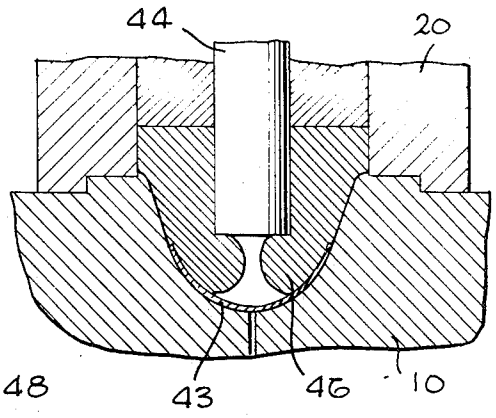

Fig. 9

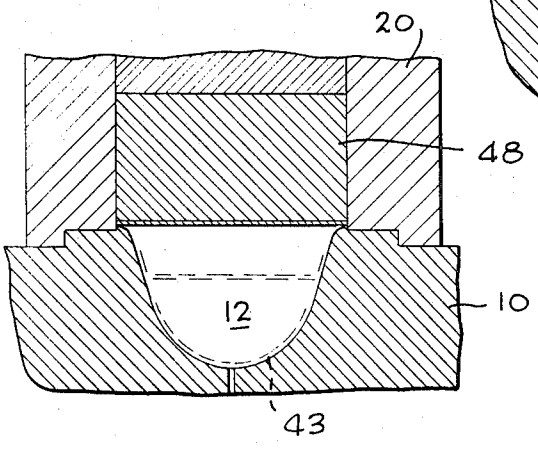

Fig. 10

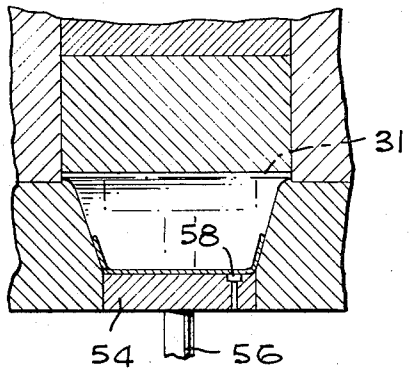

WALTER D. GREER
RICHARD C. SCHLICHT
INVENTORS

BY Warren T. Jessup
ATTORNEY

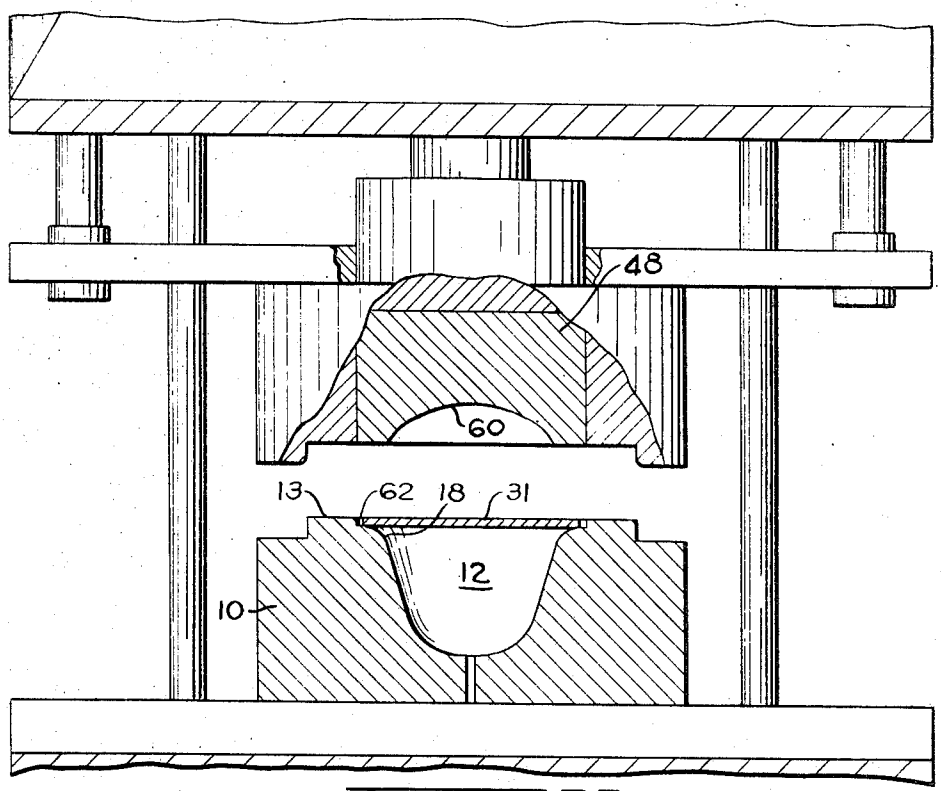

Fig. 11

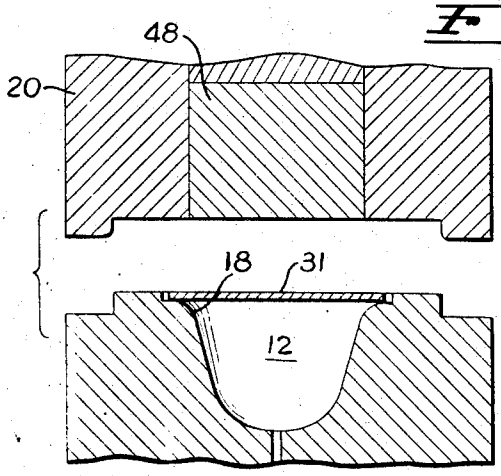

Fig. 12

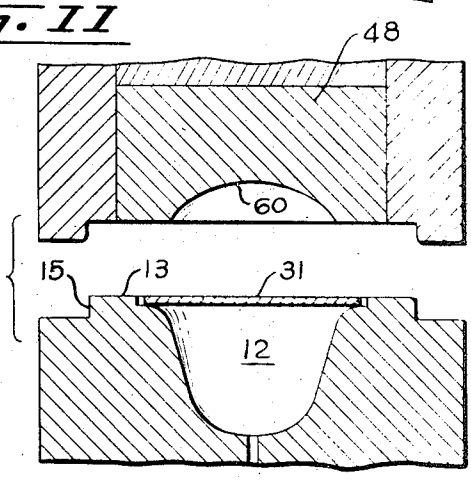

Fig. 13

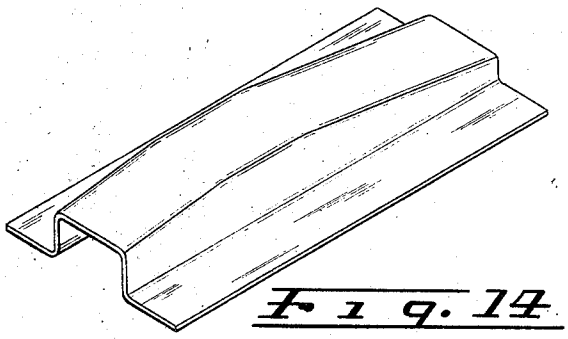

Fig. 14

WALTER D. GREER
RICHARD C. SCHLICHT
INVENTORS

METAL FORMING

RELATED APPLICATIONS

This is a continuation of Ser. No. 511,484, filed Dec. 3, 1965, and now abandoned.

BACKGROUND OF THE INVENTION

This invention relates to deep drawing of sheet metal into concave-convex forms, and more specifically to metal forming by a flowable mass forced into a rigid die.

Deep draw of sheet metal is a precise science modified somewhat by art. The deeper draws, and complex forms, require several steps, and often require annealing to relieve work-hardened areas between steps. There are some high alloy metals that virtually defy deep forming. Some desired properties of such metals would be destroyed in conventional draw practice by the number of anneals required.

The object of this invention is to provide forming apparatus and processes for forming of difficult metals without the requirement of destructive anneal between separate forming stages.

Another object of this invention is to form a sheet of metal into a convex form by wiping the metal onto a surface under an avalanche of extruded substances of great pressure advancing along the die surface.

It is another object of this invention to provide both a novel die system and a method for forming of metal.

It is a further object of this invention to provide apparatus for extrusion of a mass into a die, and to trap a workpiece between said mass and die, whereby the workpiece is caused to flow into a finished form, in contradistinction to drawing and working of the workpiece.

A still further object of this invention is to provide a formed workpiece substantially unaltered in gauge from its original gauge.

SUMMARY OF THE INVENTION

The apparatus and process of this invention is not a substitute for all deep-die or progressive-stage draw production. It is intended only as a means for producing deep-draw formation in one or two operations and without work hardening in those metals which defy formation by any other process, or which otherwise require compromises of design and repeated annealing between steps of drawing, in order to accomplish any usable results.

In short, the apparatus and process of this invention is for the more difficult type of forming situations.

No specific type of metal will be named as the type of workpiece upon which the discussed process and apparatus will operate. It will serve on any type of metal, including those that could be drawn by conventional methods. Furthermore, the metals which were difficult to work at the time this invention was conceived, may be some of the easier metals to work in comparison with further metallurgical developments in the years which follow this invention. Hence, it is only set forth that this invention provides a means for working metal, which means is totally novel in concept and execution from conventional deep-draw methods known at the time of this invention, and also differs in construction, operation and result from those efforts which have heretofore attempted to make use of a deformable lead ram to imitate conventional draw method.

The forming methods of this invention are radically different from standard procedures and there is no basis of logical comparison. In broad generality, this invention takes advantage of the forces involved on the interior of an extrusion die. Extrusion is done by forcing the material through a die. This invention used a closed-end die. The extrusion begins and the material and the workpiece fill the closed die.

There is no stretching of metal by the practice of this invention, and the uniformity with which the formed pieces retain the gauge of the original workpiece defies logical prediction. Exceedingly tough titanium metals, for example, have been formed from paper-thin sheets, and in sheets sufficiently thick to be employed in military combat hats, and in both instances, a gauge thickness of the original material is maintained almost without discernible change. Printing on the original metal remains substantially undistorted and readable even in the deepest portion of the finished workpiece.

BRIEF DESCRIPTION OF THE DRAWING

FIG. 1 is an illustration of the die and malleable ram relationship at the beginning of operation, with a workpiece positioned above the workpiece position on the forming die;

FIG. 2 is an illustration of the die closed and the malleable ram fully extruded into the die;

FIG. 3 is a closed die position of a second-stage operation at the beginning of the malleable ram deformation step;

FIG. 4 illustrates a manner of reforming the malleable ram for reuse;

FIG. 5 illustrates the completion of the reforming step;

FIG. 6 is a vertical section of a workpiece as formed by the apparatus and process of this invention;

FIG. 7 is an open position of ram and die in an alternate malleable ram construction;

FIG. 8 illustrates the terminal formation condition of the malleable ram in this alternate construction;

FIG. 9 is another alternate construction for specific types of workpiece stock;

FIG. 10 is an alternate die construction;

FIG. 11 shows a form of the apparatus modified slightly over that shown in FIG. 9;

FIG. 12 illustrates a still further modification;

FIG. 13 illustrates yet another modification; and

FIG. 14 is a perspective view of another form of a more complex contoured form, also having curvature in orthogonal planes, which may be formed by the method of the present invention simply by shaping the rigid cavity appropriately.

DESCRIPTION OF THE PREFERRED EMBODIMENTS

In the FIG. 1 of the drawing, the die **10** is formed with a die cavity **12** shaped to provide a finished concave workpiece, suitable to serve as the basic element of a combat helmet. In some instances, a two-stage formation is desirable, not from the standpoint of workpiece requirement, but because of power requirement economies. Hence, a first-stage cavity may be made with a partial cavity, or the cavity **12** may be foreshortened by the use of a temporary and removable bottom filler.

In FIGS. 1 and 2, a filler plug **14** resides in temporary manner in the bottom of the die. The plug **14** is merely seated in place and is removable.

The die cavity **12** has a bottom area below a dotted line **16**, which constitutes the actual finished shape to which a workpiece is to conform, and above the line **16** the die is configured as an entrance rim section **18.** This rim section slopes outwardly and upwardly and is an important functional structure which carries forth a part of the process novel to the present invention.

It will be noted that the rim section **18** flares outwardly to define the mouth or periphery of the cavity **12.** Continuously circumjacent the cavity **12** is a raised rim **13,** the inner periphery of which is defined by the outwardly flaring rim section **18,** and the outer periphery of which is defined by a downward shoulder **15.**

A pressure ring **20** is seatable on the face of the die **10,** and is preferably provided with interlocking surfaces which guide the ring to its proper relationship with respect to the cavity **12,** and holds it there against the lateral forces which are developed in the process. The ring serves the purpose of a removable guide through which a ram is directed toward the cavity **12.**

Within the retainer pressure ring **20** is a composite malleable ram **22.** Ram **22** is composed of a steel core **24** positioned along the axis of the ring **20,** with an annular lead collar **26** closely fitted to the surface of the core and confined within ring **20.** Above the collar **26** is a ram **28** which can supply a large tonnage pressure. A pressure means, which is indicated by the arrows **30** in FIG. **1,** holds the pressure ring **20** snug against the die **10,** but not with any necessarily great force as is needed upon the ram **28.**

A workpiece **31,** which is illustrated as being substantially circular in form to produce a bowl-shaped finished workpiece, is placed over the entrance opening of the rim **18.** This is only an example form, and the invention is not limited to a circular workpiece. The FIG. **1** does not reveal the circular nature of the workpiece, but it can be seen that the diameter of the workpiece coincides almost precisely with the diameter of the remote edge of the entrance rim **18.** The face of the die **10** has a slight step downwardly beginning at the edge of the entrance rim **18.** The pressure ring **20** fits precisely with the ledge which results.

The workpiece **31** is illustrated as a circular sheet of metal centered over the mouth of the cavity **12.** The outer edges of the sheet **31** substantially coincide with the mouth or periphery of the cavity **12.**

Furthermore, the diameter of the lead collar **26** is substantially identical to the diameter of the workpiece **31** and the entrance rim **18.** Hence, the workpiece **31** is trapped and held precisely on the entrance rim of the die by the yieldable lead. It is important to note that there is absolutely no clamping of the workpiece between retaining surfaces of any nature which will hold the workpiece in position against movement. The workpiece is caused to move bodily under the concept of this invention.

As the process of formation begins, the pressure ram **28** and the means **30** move the apparatus to a closed condition wherein the workpiece **31** is held snugly in place, but not deformed. Thereafter the pressure is increased on the ram **28.** Such increase in pressure will bring the peripheral edge of the lead collar **26** tight into contact with the edge of the entrance rim **18** at the point indicated by the reference character **32** in FIG. **2.** The pressure which is applied on the collar **26** will be translated into contact pressure at the point **32,** because this point of contact is an unyielding resistance. Hence, as the pressure continues to build up, the lead of the collar **26** begins to extrude into the cavity. This extrusion, when carried out in the confinement illustrated, is an extrusion along the edge of the entrance rim at this stage of the formation, because the pressure takes place on the peripheral portion of the lead. There is a rolling action along the wall of the entrance rim **18,** but the center portion of the collar simply moves downwardly. The lead advances in an avalanche and rolls or wipes the workpiece against the die side wall.

It will be noted that at all times the pressure of the lead collar **26** is confined within the mouth or periphery of the cavity **12,** i.e., within an imaginary cylinder centered on the center **33** of the cavity **12,** whose wall or surface passes through the circular periphery or mouth of the cavity **12,** as shown by the phantom lines **35** representing the wall or surface of this imaginary cylinder.

In demonstration of this stage of the process, if the ram **28** is reversed, and the workpiece taken from the mold at this incomplete stage, it is found that the peripheral edge of the workpiece has been turned into contact with the walls of the cavity **12,** and the entire center portion of the workpiece has remained substantially flat, and the entire workpiece has moved downwardly into the die. Hence, a shallow dish formation results wherein the edges are shaped to conform to the die, but are shaped to that portion of the die where the unformed workpiece bridges, somewhat removed from the top of the entrance rim **18.** Hence, the workpiece is not stretched, but the sides simply take on a shallow rim formation to the dimension of the die across a portion of the entrance rim a distance removed from the top of the entrance rim.

Accordingly, as the normal formation process continues after the die is originally closed, the workpiece turns and follows the side of the die downwardly under the formation of the extruding avalanche of lead, until finally the workpiece comes to rest in the position shown in FIG. **2.** At this position, once again, the workpiece is found to simply have an unformed bottom with turned edges, all of which have the same gauge thickness at which the original workpiece **31** was provided, and no wrinkles or other deformation defects in the workpiece can be found. The metal of the lead collar is bright where it has had the workpiece moved out from under the forming lead as it moves downwardly. This bright area has been moved over to conform to the shape of the die, but it is bright and polished by reason of the workpiece pulling out as it moves downwardly to the position of FIG. **2.**

The explanation of the construction and operation thus far has been with reference to a lead collar **26.** It has been found that this invention is operable with many types of malleable materials which will extrude into the die under pressure, as described. In fact, it is necessary to use other materials for some types of workpieces. Aluminum and aluminum alloys are examples of malleable rims which are used. In some rare instances, metals which normally are considered to be hard metals, and not malleable and extrudable, are employed at elevated temperatures, being inserted into the pressure ring after external heating or by the use of internally contained heating elements. Not always are such complex heated malleable rams necessarily recoverable for reuse.

Whenever the malleable collar **26** is placed under high pressure by the ram **28,** the collar material begins to flow. A body of fluid, unrestrained, acting upon the workpiece **31** would flow away from the pressure area and exert an unrestrained force upon the workpiece beyond the ability of the workpiece to withstand. In such cases, stretching and "ballooning" would take place and would destroy the workpiece. A malleable collar resists free flow to the undesired location, but under enough pressure will flow beyond desired limits.

According to this invention, in those workpiece situations where ballooning by undesired flow would normally take place, the fluid action of the composite malleable ram is confined to the peripheral area of the die by the use of core **24.** The core **24** is employed, not to apply a draw pressure to the central area of the workpiece, but rather just the opposite. It is used to maintain a contact with the central area sufficient to exclude the malleable material of the collar **26** from that area. Thus, it is caused to simply fill the space in the center of the core and ride along with the receding flat surface of the workpiece.

The core **24** of FIG. **1** is provided with a flared end **34,** upon which the fluid nature of the collar **26** under pressure may act to apply a forward force of limited amount. This degree of flaring, as illustrated, will be generally sufficient to cause the end of the core **24** to keep in contact with the workpiece **31.**

In order to insure the maintenance of a film contact between the core and the workpiece, a pressure-sensitive contact switch **36** is used for some operations; the switch is designed for reaction to a predetermined amount of pressure, as may be desired as a maximum contact pressure. Then, the core is separately driven by a power device which will force the core toward the workpiece independently of the force of ram **28** or the pressure provided by the means **30.** Thus, when there is a firm contact between the workpiece and the end of the core, the pressure-sensitive contact **36** terminates the applied pressure. Hence, as the workpiece moves away from the surface of the core, the core will be activated to follow. No appreciable force is applied by the core **24,** nor is the malleable material permitted to enter the central area and cause ballooning. Any small amount which can underflow the end of the core will have negligible ballooning effect.

Referring to FIG. **2,** the first stage of forming, according to this invention, is sometimes terminated in a foreshortened die for conservation of power requirements. The contact with the top of the removable filler plug **14** produces a dish-shaped piece with only the extreme sides turned into an approximation of the form ultimately desired. It is entirely conceivable that the filler plug be eliminated, and in some situations this is actually done. However, the power needed to drive the ram **28** is excessively large in order to deform a collar of lead large enough to fill a large die cavity. For example, a cavity to form a combat helmet shell is quite large for a single operation. The pressure must continue to act upon and extrude the lead of collar **26** in the area from the point **32** down to the edge of the workpiece as shown in FIG. **2,** although no workpiece remains in this area. Hence, such energy of deformation is wasted and requires a large press capacity. If aluminum, rather than lead, is used, the power requirements are even greater. There are some instances, however, where complete single-draw action is desirable.

In FIG. **2,** the action must stop about at the position shown because of the presence of the non-malleable core. If this die is to be used to completion, a fully-malleable ram without the core must be used to replace the composite ram. The replacement ram must have a starting form in the shape of the extruded collar in FIG. **2** to take up exactly where the composite ram ended. Then, the completion of the workpiece will be carried out and the lead is free to flow onto the central area where it formerly was excluded, and complete the workpiece.

As pointed out, the pressure needed to extrude such a large-size malleable ram is considerable. It is usually desirable to provide a die which is equivalent to the original die from the workpiece position down. Then, a smaller retainer ring is supplied which matches the entrance rim of the smaller diameter die and a fully malleable ram substituted for the composite ram. This ram will have a considerably smaller diameter, and will have considerably lower power requirements than would be required if a full-size malleable ram were used in the original die.

FIG. **3** illustrates the use of an alternate die **40** having a die cavity **41,** which corresponds to the needed portion of the die cavity **12** after the FIG. **2** state has been reached. The area of entrance rim **18** above the workpiece in FIG. **2** is omitted, and the balance of the die **12** then corresponds to die **41.**

A malleable ram **42,** which is a totally malleable lead member, may then be employed to continue the formation. No central core is employed in this stage. By the application of pressure on the malleable ram **42,** the formation continues along the rim area and the small amount of ballooning that can take place in the central area before the workpiece has been formed to the contour of the die **41** is negligible. However, it is important to note that in the second-stage draw of FIG. **3,** the portion of the workpiece which has been formed into the rim edge is not held to the position shown in FIG. **3,** but will follow along and slide down further in the die as the flat portion of the workpiece is further formed and moved into the finished totally-formed condition. Hence, the dotted lines indicated by the reference number **43** in FIG. **3,** and as shown in FIG. **6,** indicate the finished product and the amount of sliding movement of the sides as it moves downwardly, conforming slightly to the difference in the cavity formation.

It is this forming of the workpiece material as it is literally pushed before the malleable ram that makes possible the outstanding results of this invention. The workpiece material is not work hardened because there is no inner molecular stretching and working, other than one movement into its ultimate location. A finished workpiece coming from the stages as described in the FIGS. **1** through **3** comes from the die with essentially the same hardness as the original workpiece **31.** This is true whether the operation is interrupted between the stages of FIGS. **2** and **3,** or whether a continuous operation is carried forth from the beginning workpiece to the finished part. Furthermore, this is true although other types of deep draw require numerous anneals between draw stages.

Referring to FIG. **7** of the drawings, a straight-sided core **44** is shown in the place of the flared core **24.** This is an example of the type of operation which can go to completion in one stage. Normally, there is no pressure applied to the core **44,** other than that which is natural

in the fluid action of the lead as it is deformed. For this reason, the straight core **44** tends to lag behind the workpiece and the forming lead will underflow and form bulbs of the lead material as indicated by the reference number **46** in FIG. **8.** Note in the FIG. **8** that the workpiece has been formed into a finished piece **43,** tight against the bottom of the die, but the lead underflow portions **46** are not in complete contact, nor is there any lead in contact with the portion of the workpiece at the exact crown of the finished piece **43.**

In some operations, the straight-sided core **44** may advance either too far or too little, and in such instances the core may be secured to the driving ram and caused to advance with the ram. Thus, the extrudable lead collar, because it is entering a smaller area than its original volume, will advance ahead of the core **44** in substantially the manner described. Furthermore, a controlled advance of the core at a separate rate, under power, may be provided for other instances.

This phenomenon of workpiece formation illustrates further the fact that the workpiece is not drawn in the conventional manner, but is caused to turn and move into place under the extruding action of the malleable collar. As the lead is caused to extend beyond the end of the core **44,** the material of the workpiece is actually pushed ahead of the lead and falls into place against the die, exactly as illustrated in FIG. **8.** In fact, it has been found that care must be exercised not to continue the pressure on the malleable lead for too great an extent or the crown portion may be caused to actually buckle under the pressures transferred from further up along the side of the workpiece.

The process and apparatus of this invention deforms the ram for each piece drawn. One of those stages is to return the malleable ram to its original condition as shown in FIG. **1** for reuse. This is accomplished by the ramming of the formed lead against a flat surface to push it back into the original condition. Hence, in FIG. **4** a flat surface bridge **52** is shown to have been placed over the die cavity **12,** and the formed lead collar **26,** which has the outside configuration of the die cavity **12,** with an indent where the workpiece finally resided, is trapped between the surface of bridge **52** and the ram **28.** By application of pressure and the use of ring **20** as a mold, the lead is caused to flow back into its original condition, as shown in the final stage of reformation in the FIG. **5.** As an alternate, a full plug may be placed in the die **12** and used as a flat abutment for this purpose.

Under the conditions wherein the die of FIG. **2** is employed with a separate malleable ram to complete the formation in that die, the second-stage fully malleable ram will be likewise returned to its starting condition by placing the removable plug **14** back into the die, placing a formed workpiece or a substitute in the die over the surface of the plug **14,** and then driving the fully-formed malleable ram against that surface to bring it back into the starting position conforming to the upper part of the die as shown in FIG. **2.**

Whenever underflow, such as shown in FIG. **8,** is allowed, there will be a trapping of some of the lead under the end of the core **44** which must be removed.

There are some workpiece sizes and metal types which are beneficially formed without any central core, and generally in one continuous operation. Apparatus of this type is shown in FIG. **9,** using a solid lead member **48.** Prior art structure has employed malleable lead in one-operation formation, but with conventional draw tactics wherein the edges of the workpiece are clamped. When employing the principles of this invention, wherein the workpiece is held only by means of the malleable material, and, therefore, allowed to slide, the formation will take place in the manner that was described with respect to the two malleable plugs wherein central hard cores are employed. As noted, this alternate application is limited in the scope of workpieces and sizes because ballooning in the center of the lead plug will otherwise cause a destruction of the workpiece.

This construction of FIG. **9,** in the process employed, does not exercise the complete degree of control as in the embodiment employing central cores and control of those cores, and, therefore, it is not operative to the degree of accuracy as the core embodiments. The use of a unitary malleable ram without a core is less costly, and may be employed for operations wherein the degree of accuracy is not required or the material is not as difficult to handle. The principles of operation remain essentially the same. The extrusion takes place from the side edges.

The full malleable ram of FIG. **9** will begin to balloon slightly in the center and cause some stretching as the process takes place. The workpiece may actually shift laterally in the die to some degree, whereas, this would not take place in the use of the central core. Nevertheless, this FIG. **9** alternative construction is able to produce a sufficient quality for many workpieces. Actually, the quality of this alternative process is generally far greater than a similar piece made by draw procedures. Thicker workpiece gauge will cause the slight shift from ideal to a greater degree than thin workpieces, because a static pressure must be built up before workpiece movement begins, and the greater the static pressure, the more likelihood of one side yielding slightly more than the other at the beginning of movement down into the die.

In all of the die formations, the fact that the adherence of workpiece and malleable plug is so close to the die, requires a breather tube **50** to bleed the air which is trapped in the die. In the event such air tube is not provided, the air will be sufficiently great in resistance and volume that the workpiece will be badly distorted.

An alternate construction as shown in FIG. **10** has been found useful for many applications. In this apparatus, a table **54** is provided in the die and serves somewhat the same purpose as the flared core **24,** but in reverse location. The table **54** is supported by a receding fluid piston ram **56,** which has a pressure-sensitive contact **58** acting in the manner of control or contact **36.** Hence, as the lead forms along the edges of the die, the central area is supported against ballooning, but the table will recede from the workpiece as the pressure acts on the contact **58.**

In FIG. **11** is illustrated a variant of FIG. **9,** which makes possible the formation of even very hard-to-work sheets with a high degree of accuracy and with no significant ballooning, stretching, folding or other undesired deformations. In this embodiment, the malleable lead ram **48** is provided with a central depression or concavity **60.** This concavity makes possible the elimination of the center core **24,** while still preventing ballooning of the central portion of the workpiece **31.** This is because the center portion of the sheet **31** is not contacted by the ram **48** until the edges of the work-

piece 31 have been appreciably formed and the workpiece pressed well into the cavity 12. As the formation continues, with the ram 48 being pressed deeper and deeper into the cavity 12, the concavity 60 gradually disappears as the lead 48 causes the edges of the workpiece 31 to move down around the rim section 18 and into the cavity 12. By the time the center portion of the workpiece 31 is contacted by the lead 48, through the gradual elimination of the concavity 60, the workpiece has been well formed and considerably pressed down into the cavity 12, so that the pressure on the center of the workpiece 31 is not sufficient to cause ballooning or thinning.

FIG. 11 illustrates another variant feature wherein the tiny shoulder 62 at the mouth of the cavity 12 is depressed below the rim 13 instead of being above the rim. This provides a useful means for accurately centering the workpiece sheet 31 over the mouth of the cavity 12.

As noted, the depression or concavity 60 of FIG. 11 is useful in the formation of very hard-to-form workpieces 31. With softer metals a flat-faced ram 48, as shown in FIG. 9, has been found to be quite satisfactory.

A further variant of the apparatus shown in FIGS. 9 and 11 is seen in FIG. 12, wherein the malleable ram 48 is confined by the pressure ring 20 to an area which does not extend out even to the periphery of the mouth or entrance rim section 18 of the cavity 12. The portion of the workpiece 31 which extends outside of the periphery of the ram 48 is sufficiently small, and the curvature of the entrance rim section 18 is of sufficiently low radius that the lead 48 is able to flow outwardly between 20 and 31 and produce a downward pressure on the outer edge of the workpiece 31, holding it firmly against the entrance rim section 18 and thus precluding undesirable folding or creasing. Once the outer edge of the workpiece 31 has been drawn or moved inwardly, within the periphery of the ram 48, the operation proceeds substantially as the embodiments heretofore described.

A still further variant of the apparatus is shown in FIG. 13, wherein the outer periphery of the ram 48 extends outwardly beyond the outer edge of the workpiece 31 and the cavity 12, but still lies within the outer periphery 15 of the rim 13. Thus, the lead is still confined so that it cannot move the outer edges of the sheet 31 down over the shoulder 15. This variant performs satisfactorily, particularly if recessed as shown at 60, but is relatively inefficient because of the necessity for flowing the outer portion of the ram 48 inwardly as the forming operation proceeds. It is apparent that a novel feature of this invention as exemplified by all the apparatus and the methods set forth above is that the workpiece is never in tension but is always maintained in compression by a material more malleable than the workpiece.

FIG. 14 illustrates a contoured product of noncircular configuration which, however, like that of FIG. 6, has double curvature, i.e., curvature in orthogonal planes, and, hence, is ideally suited to formation by the techniques of the present invention. The shape of the cavity 12 for forming the shape shown in FIG. 14 is, of course, exactly the same as the shape of the outer surface of the part shown in FIG. 14.

Whereas the present invention has been shown and described herein in what is conceived to be the best mode contemplated, it is recognized that departures may be made therefrom within the scope of the invention which is, therefore, not to be limited to the details disclosed herein, but is to be afforded the full scope of the invention as hereinafter claimed.

What is claimed is:

1. Forming apparatus, comprising:
   - a die cavity having a concave terminal portion formed to the configuration of a desired finished workpiece, and having a curved rim portion sloping from a lateral extremity into the terminal portion, said lateral extremity being the peripheral form of a workpiece at the beginning of formation;
   - a malleable ram having a periphery substantially conforming to said lateral extremity of said rim portion, said ram characterized by being extrudable under pressure into conformity with said die cavity;
   - means for moving said ram into said die cavity; and
   - means to confine said malleable ram fully within said lateral extremity of said rim portion during workpiece formation.

2. Apparatus as defined in claim 1 further characterized in that means is provided to confine the action of said extrudable ram to the wall area of said cavity.

3. The apparatus as defined in claim 1, further characterized by said ram being a composite of a central core of material which is non-malleable under pressure and temperature conditions which render the remainder of the ram extrudable to fill the die cavity, said central core extending axially of the ram to a forward end, a malleable collar surrounding the core, said core confining the action of said collar to the wall area of said cavity; and

said moving means moves said collar into said cavity.

4. The apparatus as defined in claim 3, further characterized by means for holding said central core against the surface of a workpiece with a snug pressure below a work draw pressure which would be sufficient to supply significant draw forces to a workpiece.

5. An extrudable ram for deep-draw forming, comprising a composite construction having a central core and a perimeter portion, said core being of material having substantially greater resistance to extrusion deformation than the material of said perimeter portion.

6. The apparatus as defined in claim 4 further characterized in that the said central core has a flared forward end for receiving forward driving pressure from the malleable collar.

7. The apparatus as defined in claim 4 further characterized in that a pressure-sensitive means is located on the said central core forward end;
   - means provided separately from said collar driving means for driving said core against a workpiece; and
   - said pressure-sensitive means having a control effect over said means driving the core for holding the core against a workpiece with only sufficient pressure to actuate said pressure-sensitive means.

8. The apparatus as defined in claim 1 further characterized by a receding platform in said die cavity, operating in a path between a workpiece contact position at the beginning of forming action to a retracted position to the die extreme;
   - pressure-sensing means on said platform for sensing pressure applied thereto by said workpiece; and
   - means responsive to said pressure-sensing means to retract said platform as forming action proceeds

for maintaining the support pressure of said platform at a predetermined maximum.

9. The apparatus as defined in claim **4** further characterized in that the central core has a face end formed to about a workpiece blank in the central area thereof spaced from said rim lateral extremity;

a pressure-sensing means in said core face end for detecting and responding to a pressure; and

drive means independent of said means driving the collar and responsive to said sensing means for forcing said core to follow along with a receding workpiece as it is formed by said malleable collar, said core thereby excluding the malleable material from the central area, and confining all forming pressures to the side walls of said cavity.

10. The process of drawing a sheet into a contoured form, comprising the steps of:

providing a die cavity having a bottom portion of a desired cavity form for a finished workpiece, and a sloping entrance rim portion leading into said bottom portion;

placing a workpiece over said die cavity;

placing an extrudable ram over said workpiece substantially conforming to the perimeter of the workpiece; and

forcing said ram to first contact the extremities of said workpiece at said rim portion and thereafter extrude from the mass of the ram into said cavity along the walls of the die cavity.

11. The process as defined in claim **10** further characterized in the step of withdrawing the extruded ram from the die cavity, and thereafter forcing the extruded ram against a surface to compress the ram back to its original form suitable for reuse in forming another workpiece.

12. The process as defined in claim **10** further characterized in the step of confining said extrusion to an annular area adjacent the wall of the die throughout a major portion of the formation.

13. The process as defined in claim **10** further characterized in the step of providing said ram as a component of a core piece and collar, with said core piece of non-extrudable material under the pressure and temperature conditions which render the collar extrudable;

placing said core piece in the center of said collar; and

holding said core piece in contact with the workpiece surface with little effective draw pressure, and simultaneously extruding said collar to form the workpiece from the edge area.

14. A process for forming a sheet into a contoured configuration comprising: placing the sheet over the mouth of a die cavity having a periphery defining the cavity mouth; forcing the sheet into the cavity under continuous compression by a substance more malleable than the sheet.

15. The process of forming a sheet into a cavity die, comprising the extrusion of a malleable ram into the die with the sheet between the ram and die, by forming the die with a flared mouth portion extending to a peripheral edge conforming to the size of a workpiece blank, and causing the ram to first seat on the edge of the blank on the flared portion and thereafter extrude into the die with the workpiece free to ride down into the die under the extrusion action.

16. Process for forming a sheet into a contoured configuration, comprising:

placing the sheet over the mouth of a die cavity;

forcing the sheet into the cavity by applying pressure against the sheet, initially around the periphery of the cavity, and thence closer to the center of the cavity;

at all times progressing the pressure only inwardly toward said center;

thereby allowing the edges of the sheet to be drawn only inwardly; and

thus flowing the sheet into a contoured configuration, without thinning or folding the sheet.

17. Process of forming a sheet into a contoured configuration, comprising:

positioning the sheet over the mouth of a die cavity; and forcing the sheet into the cavity by applying pressure to the sheet around the peripheral portion of the cavity,

at all times permitting the edges of the sheet to be moved inwardly into the cavity.

18. Process in accordance with claim **2**, including additionally the step of

steadily moving said pressure inwardly toward the center of the cavity,

thereby moving the edges of the sheet inwardly into the cavity without folding or thinning of the sheet.

19. Process of forming a sheet into a contoured configuration, comprising:

placing the sheet over the mouth of a die cavity having an outwardly flaring rim section;

forcing the sheet into the cavity by applying pressure opposite said flaring rim section, thereby to draw the edges of the sheet into the cavity; and

progressively thereafter moving the pressure inwardly toward the center of the cavity to draw the sheet into conformity with the cavity configuration, without thinning or folding the sheet,

at all times permitting the edges of the sheet to be moved into the cavity.

20. Process of forming a sheet into a contoured configuration, comprising:

placing the sheet over the mouth of a die cavity having a periphery defining the cavity mouth;

forcing the sheet into the cavity by applying pressure against the sheet, initially around said periphery and thence progressively inward toward the center of the cavity;

at all times confining said pressure to the area within said periphery; and

flowing the sheet into the contoured configuration while maintaining substantially constant sheet thickness.

21. Process for forming a sheet into a contoured configuration, comprising:

placing the sheet over the mouth of a cavity formed in a die having a rim surrounding said mouth;

forcing the sheet into the cavity by applying pressure against the sheet, initially around the periphery of the cavity and thence closer to the center of the cavity;

confining said force at all times within said rim, thereby allowing the edges of the sheet to be moved only inwardly; and

flowing the sheet into the contoured configuration while maintaining substantially constant sheet thickness.

22. Apparatus for forming a sheet into a contoured configuration, comprising:

means forming a cavity having a periphery defining the cavity mouth;

malleable ram means for forcing into said cavity a sheet of material placed over said mouth; and

means for confining said ram means within said periphery while leaving said sheet of material free of restraint against lateral movement inwardly of the cavity.

23. Apparatus for forming a sheet into a contoured configuration, comprising:

a die having a cavity and a rim contiguously surrounding said cavity, the mouth of said cavity defining the inner periphery of said rim, the outer periphery of said rim being spaced outwardly of said mouth and substantially co-planar with said inner periphery;

malleable ram means for forcing into said cavity a sheet of material placed over said cavity mouth; and

means for confining said ram means within the outer periphery of said rim while leaving said sheet of material unrestrained against lateral movement inwardly of the die cavity.

* * * * *

Dedication

3,774,430.—*Walter D. Greer*, Lynwood, and *Richard C. Schlicht*, Seal Beach, Calif. METAL FORMING. Patent dated Nov. 27, 1973. Dedication filed June 17, 1976, by the assignee, *The Garrett Corporation.*

Hereby dedicates to the Public the entire remaining term of said patent.

[*Official Gazette August 17, 1976.*]