Feb. 3, 1953 J. J. ISELLA ET AL 2,627,354

AUXILIARY TRAY SUPPORTING DEVICE

Filed April 28, 1950 3 Sheets-Sheet 1

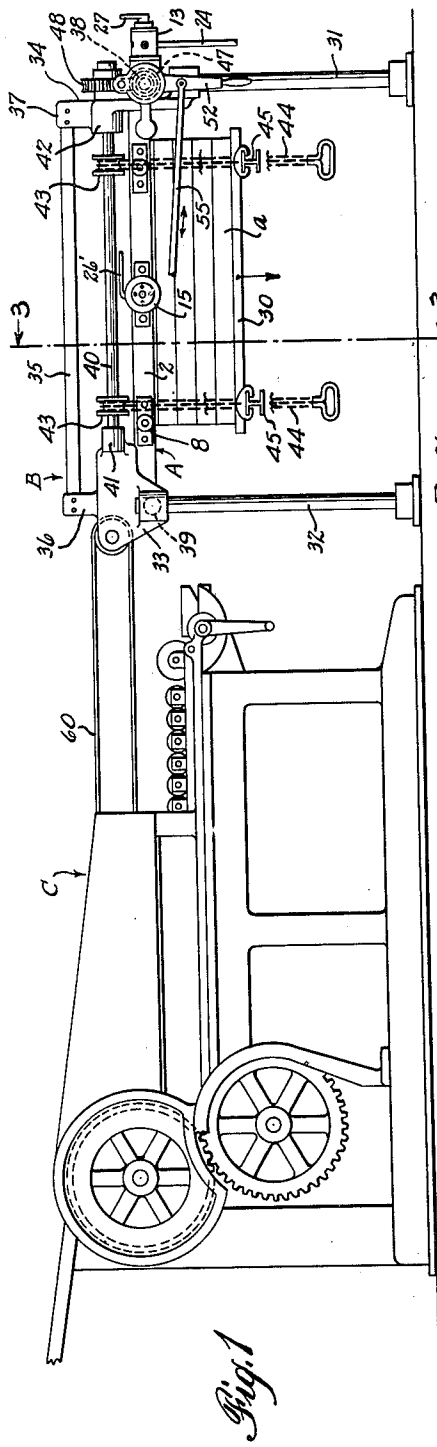

Fig. 1

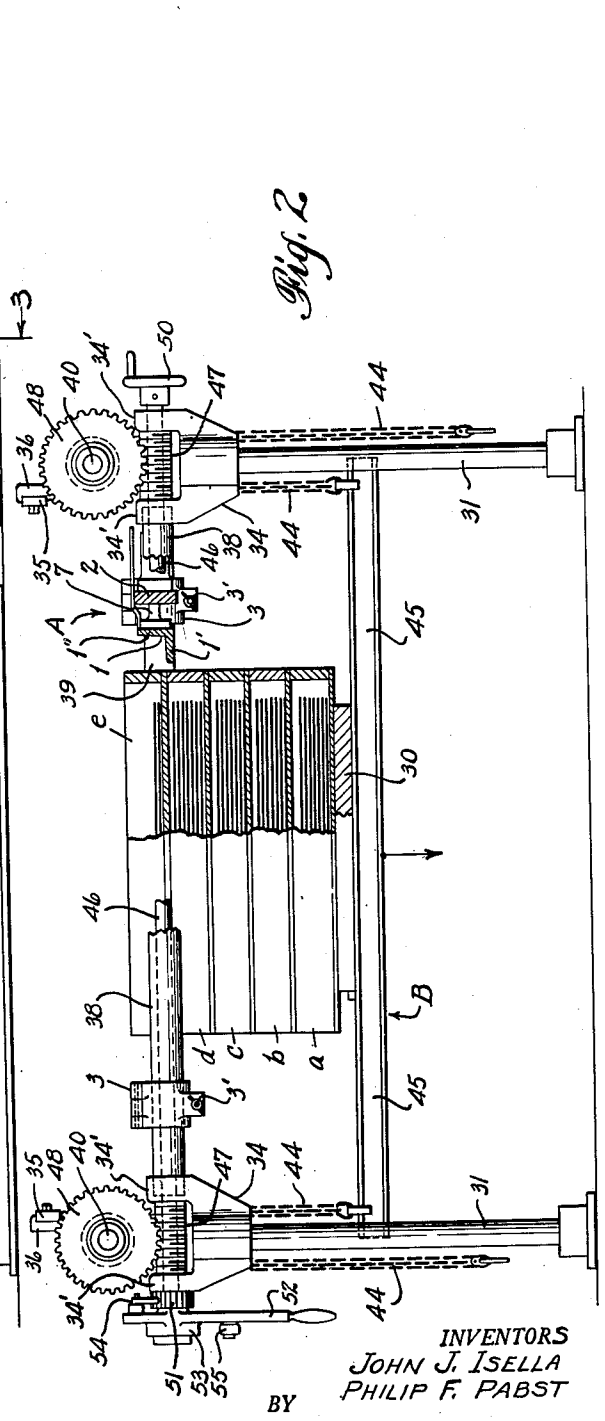

Fig. 2

INVENTORS
JOHN J. ISELLA
PHILIP F. PABST
BY
Austin, Wilhelm & Carlson
ATTORNEYS.

Feb. 3, 1953 J. J. ISELLA ET AL 2,627,354

AUXILIARY TRAY SUPPORTING DEVICE

Filed April 28, 1950 3 Sheets-Sheet 2

Fig. 3

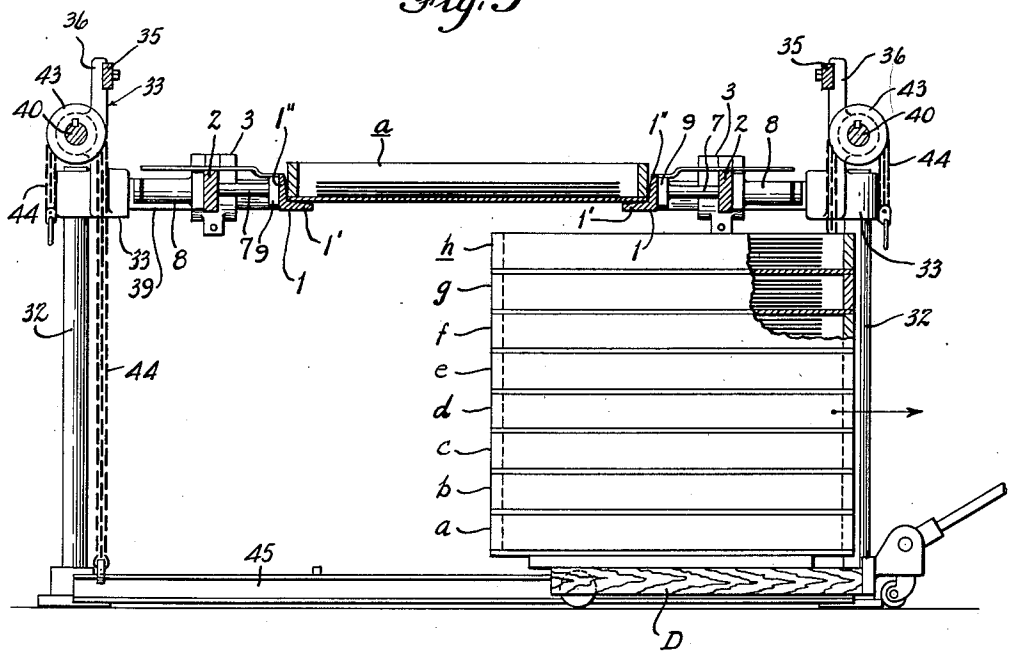

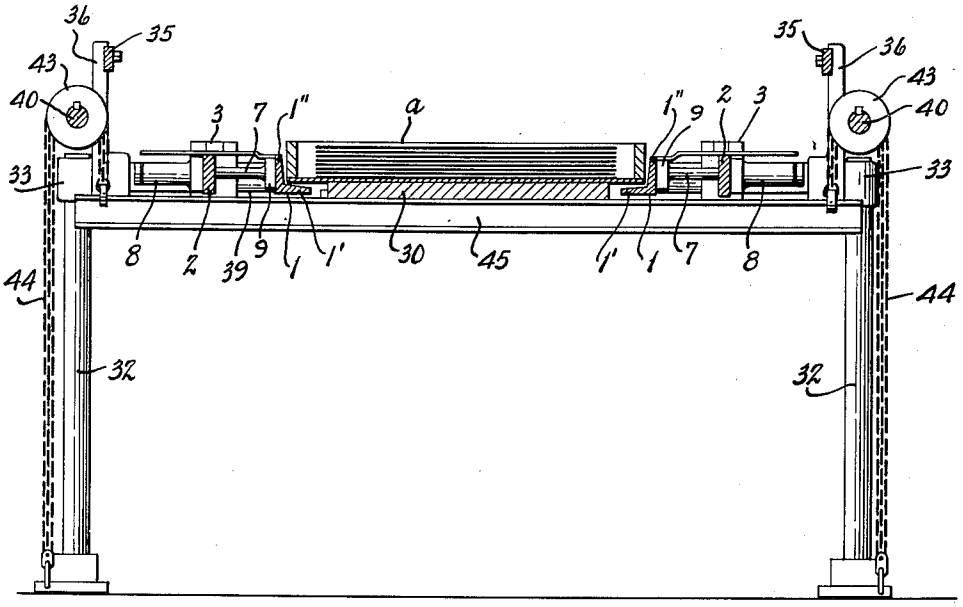

Fig. 4

INVENTORS
JOHN J. ISELLA
BY PHILIP F. PABST
Austin, Wilhelm & Carlson
ATTORNEYS.

Feb. 3, 1953 J. J. ISELLA ET AL 2,627,354

AUXILIARY TRAY SUPPORTING DEVICE

Filed April 28, 1950 3 Sheets-Sheet 3

Fig. 5

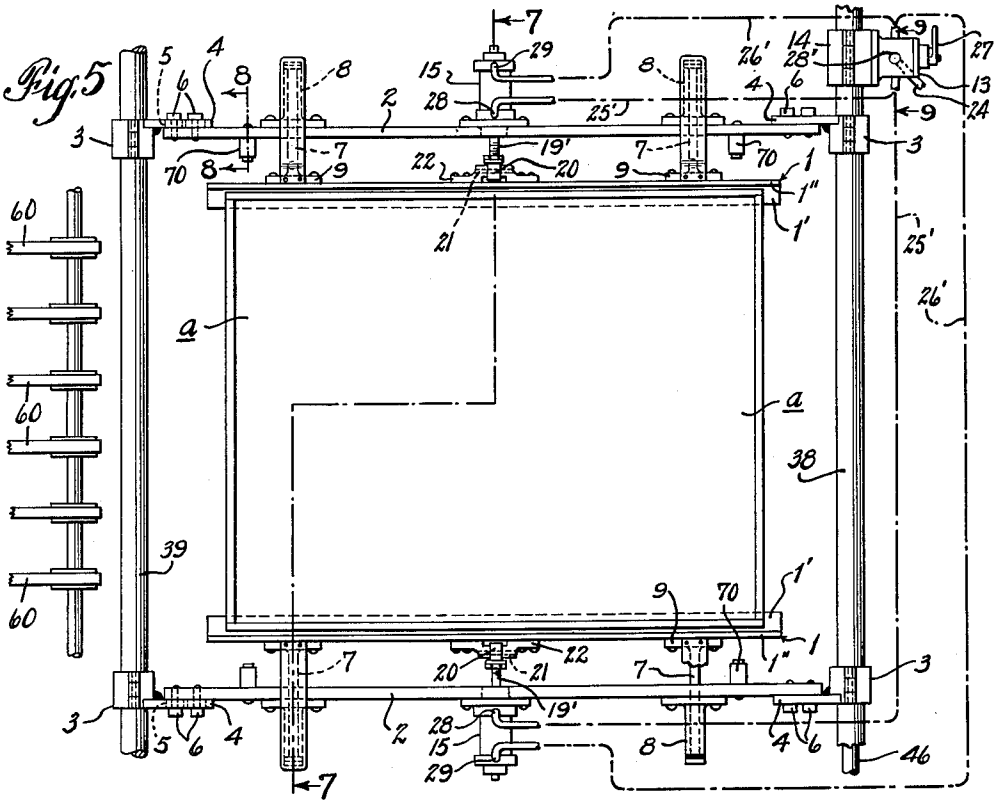

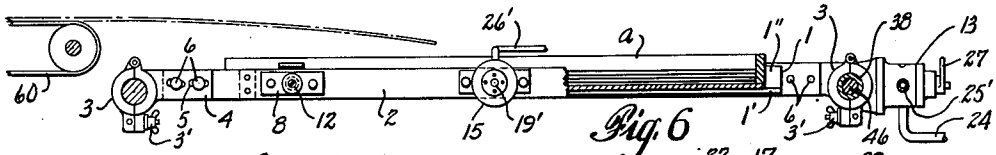

Fig. 6

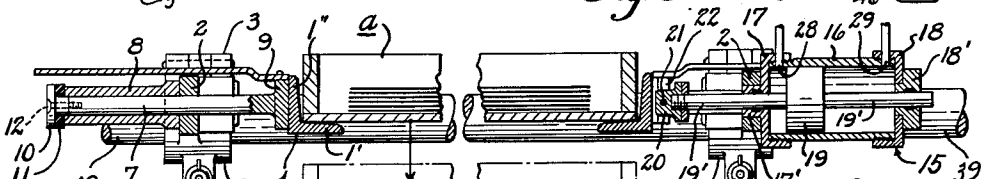

Fig. 7

Fig. 9

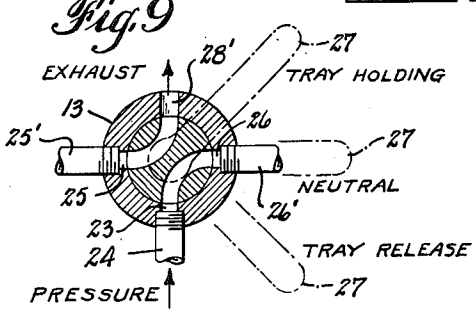

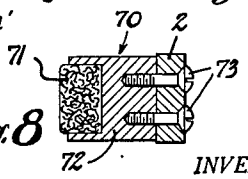

Fig. 8

INVENTORS
JOHN J. ISELLA
BY PHILIP F. PABST
Austin, Wilhelm & Carlson
ATTORNEYS.

Patented Feb. 3, 1953

2,627,354

UNITED STATES PATENT OFFICE

2,627,354

AUXILIARY TRAY SUPPORTING DEVICE

John J. Isella, North Haven, and Philip F. Pabst, New Haven, Conn.

Application April 28, 1950, Serial No. 158,628

7 Claims. (Cl. 214—6)

1

This invention relates to an improved auxiliary tray supporting device designed for association with a printing press capable of printing paper sheets of considerable weight and surface area.

In the manufacture of folding paper boxes, sheets of relatively thick paper stock of considerable size are used to permit printing thereon and subsequent cutting therefrom of box blanks in multiple.

Because of the weight of such large, thick sheets of stock and the quick successive piling or stacking thereof by the printing press at normal production speeds while the ink is still wet, the transfer of ink from the printed faces to the unprinted backs of the successive sheets—known in the trade "offset"—is considerably more likely than in the printing of thin, light weight paper of the same size.

The stacking of freshly printed sheets of paper boxboard directly from the press to a depth of more than three inches or so, is quite likely to cause "offset" sufficient to result in serious defacement of both sides of a high percentage of the sheets.

It is, therefore, customary in the trade to use shallow trays in which to receive small lots of freshly printed sheets as they come off the press and to stack these trays, one on another, so that their side walls, and not the printed sheets in them, will bear all the weight over that of each individual lot.

However, the height to which such trays can be stacked in sheet receiving position at the delivery end of the press naturally is limited. So, when the limit is reached, it is necessary to stop the press to permit removal of the accumulated stack of sheet filled trays and arrange for starting a new stack.

It is the general practice in the trade to support such sheet receiving trays on a stacking apparatus which comprises a framework having a vertically movable tray supporting platform. In general, the platform rests on horizontal bars hung from suspension chains each of which is trained over a sprocket mounted on a framework associated directly with the delivery end of the printing press. The sprockets are manipulated through a mechanism connected to a moving or reciprocating part of the press and which operates to gradually lower the horizontal bars and platform from initial raised starting position as the sheet delivery progresses.

When the press is placed in operation, an empty receiving tray is placed in position on the raised platform so as to receive the successive printed

2

sheets as discharged from the press. When this first tray has received a stack of printed sheets to the desired depth, another empty tray is placed to rest on the side walls of the first tray, the chain supporting sprockets being automatically manipulated to lower the platform to maintain the second tray in sheet receiving position. When the limit of such stacked trays have been filled with printed sheets, it is necessary to shut down the press during the interval required to remove the tray stacked platform from the supporting bars, insert another platform on the supporting bars, adjust the chains and inserted platform to raised starting position, and thereupon place the first tray of the second stack in position to be filled.

Quality printing can only be obtained when the press is operated uniformly at the speed for which the press is designed. It is also desirable to operate the press continuously at such uniform speed until the entire printing run has been completed, since valuable production time is lost when the press is shut down to remove the stacked trays filled with the freshly printed sheets. Furthermore, sheets run through the press during the acceleration interval after each shutdown, are usually defective and must be discarded, resulting in further loss of material and output.

This invention is directed to the provision of an improved auxiliary tray supporting and stacking apparatus, which may be adjustably manipulated to support a tray in sheet receiving position adjacent the discharge end of the press in a manner so that printed sheets may continue to be discharged into a tray as supported by the improved auxiliary supporting device during the interval required to remove a platform of loaded trays, and insert and raise another platform to initial starting position. This improved auxiliary tray supporting device thus permits the press to be run continuously at efficient uniform speed until the entire production run has been completed, resulting in substantial increased production of high quality printed sheets, without the loss of valuable time and materials which has heretofore necessarily resulted from press shutdowns during the intervals of tray platform removal, replacement and adjustment thereof.

Other objects and advantages of this invention will become apparent as the disclosure proceeds.

Although the characteristic features of this invention will be particularly pointed out in the claims, the invention itself, and the manner in which it may be carried out, may be better understood by referring to the following descrip-

tion taken in connection with the accompanying drawings forming a part hereof, in which

Fig. 1 is a side elevational view of the improved auxiliary tray supporting device shown in association with a conventional tray supporting and stacking apparatus of a power printing press.

Fig. 2 is an end elevational view showing the improved auxiliary tray supporting device in retracted position, a series of stacked trays being shown resting on the platform of the associated tray supporting and stacking apparatus, certain parts being broken away to reveal certain structural details.

Fig. 3 is a vertical cross-sectional view showing the improved tray supporting device in tray supporting position as viewed along line 3—3 of Fig. 1, and with the associated tray collecting and stacking apparatus inoperative, the tray stacked platform thereof being shown resting on a truck by means of which the filled trays are transported.

Fig. 4 is a vertical cross-sectional view taken along line 3—3 of Fig. 1 showing the platform of the improved tray collecting and stacking apparatus in raised position ready to support the tray upon retraction of the tray supporting bars of the auxiliary tray supporting device.

Fig. 5 is a top plan view of the improved auxiliary tray supporting device showing a tray supported thereby in position to receive freshly printed sheets as discharged from the press.

Fig. 6 is a side elevational view of the device partially in section supporting a partly filled tray.

Fig. 7 is a vertical cross-sectional view of the device with tray supported thereon as the same would appear when viewed along the staggered line 7—7 of Fig. 5.

Fig. 8 is an enlarged transverse cross-sectional view of one of the shock absorbers associated with the device as the same appears when viewed in the direction of the arrows 8—8 of Fig. 5, and

Fig. 9 is a diagrammatic view of the three way air valve for controlling the operation of the device.

Similar reference characters refer to similar parts throughout the several views of the drawings and the specification.

Referring more particularly to Figs. 1, 2, 3 and 4, the improved auxiliary tray supporting device A is shown in association and in operative combination with a conventional tray supporting and stacking apparatus B and arranged for the reception of freshly printed sheets as they are delivered from a power printing press, as for example, a bed cylinder press C.

The conventional tray supporting and stacking apparatus B as illustrated in Figs. 1, 2, 3 and 4, generally comprises a vertically movable and removable platform 30, on which the trays containing the printed sheets are supported. The platform 30 is mounted within the confines of a pair of front supporting legs 31 and a pair of rear supporting legs 32, positioned adjacent the discharge end of the printing press C. A wing bracket 33 is mounted on the upper end of each of the rear legs 32 and a wing bracket 34 of somewhat modified construction is mounted on the upper end of each of the front legs 31.

The rear wing brackets 33 and the front wing brackets 34 are connected by a generally rectangular framework which comprises a pair of side framing bars 35, each bar being connected at the rear end thereof to an upright extension 36 of the rear wing bracket 33, the front end thereof being connected to an upright extension 37 of the front wing bracket 34, as shown more particularly in Figs. 1 and 2. The front wing brackets 34 are inter-connected by means of a tubular framing member 38 whose ends are suitably fixed to the front wing brackets 34. At the rear end of the conventional tray stacking mechanism B, a framing member 39 is provided whose ends are suitably secured to the rear wing brackets 33, as shown more particularly in Fig. 2.

The tray supporting platform 30 is directly suspended from a pair of rotatable shafts 40 as shown in Figs. 1 to 4 inclusive. The rear end of each shaft 40 is rotatably supported in a bearing portion 41 which forms a part of the rear bracket 33, and the front end of each shaft 40 is rotatably supported in a bearing portion 42 associated with the front wing bracket 34. As shown more particularly in Figs. 1, 3 and 4, each shaft 40 has a pair of spaced chain sprockets 43 fixed thereto, each sprocket having a platform suspension chain 44 trained thereover. The tray supporting platform 30 rests upon a pair of spaced support bars 45 whose ends are connected to one end of each of the four suspension chains 44. Thus the two platform supporting bars 45, connected to one end of the four suspension chains 44, may be raised and lowered by a rotative manipulation of the shafts 40, from which the chains are suspended.

The platform 30 is vertically manipulated by means of a manipulating rod 46 which extends through the tubular framing member 38. The manipulating rod 46 is provided with a threaded worm 47 at each end thereof, as shown more particularly in Fig. 2, and is suitably journalled for rotation within the journal portions 34' of the front wing brackets 34. Each of the threaded worms 47 is in mesh with a worm wheel 48 fixed to one end of each platform suspension shaft 40, as shown more particularly in Figs. 1 and 2. Thus it will be appreciated that rotation of the manipulating rod 46 will operate to rotate the suspension shafts 40 to raise and lower the platform 30 of the tray stacking apparatus B.

A hand wheel 50 is fixed to one end of the manipulating rod 46 to provide manual means by which the platform 30 may be raised and lowered. Automatic means, operatively connected to the manipulating rod 46 and to a moving or reciprocating part of the printing press, is also provided to transmit incremental rotative movement to the manipulating rod 46 to thereby gradually and slowly lower the platform 30 in accordance with the rate at which the printed sheets are discharged from the delivery tapes 60 of the press into the successive receiving trays.

This automatic means as shown in Figs. 1 and 2 conventionally comprises a ratchet wheel 51 fixed to one end of the manipulating rod 46. A hand lever 52 having a bearing portion 53 is journalled for oscillating movement on the projecting end of the manipulating rod 46. A ratchet pawl 54 pivoted on the hand lever 52 is designed to engage the teeth of the ratchet wheel 51, as shown in Figs. 1 and 2. Oscillating movement of the hand lever 52 will thus operate to oscillate the pawl 54 and thereby transmit incremental rotative movement to the manipulating rod 46. The hand lever 52 is operatively connected by means of a connecting rod 55 to a moving or reciprocating part (not shown) of the printing press C.

Downward movement of the platform 30 may be halted by swinging the pawl 54 out of engagement with the ratchet wheel 51. When de-

sired, the connecting rod 55 may be disconnected from the hand lever 52 to permit manual rotation of the manipulating rod 46 by the hand wheel 50, thereby effecting corresponding manual lowering of the tray supporting platform 30. When the pawl 54 is swung out of engagement with the ratchet wheel 51, the hand wheel 50 may also be ultilized to manually raise the tray supporting platform 30 to initial starting position as shown in Fig. 4.

The improved auxiliary tray supporting device A constructed in accordance with this invention, comprises a pair of spaced tray supporting bars 1 which may be angle-shaped in cross-section to present a horizontal leg 1' and a vertical leg 1''. As shown in Fig. 5, the tray supporting bars 1 are adjustably mounted to support the initial tray *a* therebetween in a convenient position to receive the freshly printed sheets as they are discharged from the printing press C.

Each tray supporting bar 1 is adjustably and movably supported from a side bar 2 extending parallel thereto. Each side bar 2 is removably and adjustably supported at each end thereof to the framing bar 39 and to the tubular framing member 38 of the stacking apparatus B as illustrated in Figs. 5, 6 and 7 by a clamp bracket 3 having an extended arm portion 4 each provided with a pair of elongated bolt holes 5 designed to adjustably receive a pair of bolts 6. Each end of each side bar 2 is provided with a pair of threaded bolt holes which receive the threaded ends of the bolts 6, thereby providing adjustable supporting means for the side bars 2 as illustrated in Figs. 5 and 6.

Each tray supporting bar 1 is also adjustably supported for horizontal movement from the adjacent side bar 2 by means of a pair of sturdy horizontally extending stub pins 7. Each stub pin 7 extends through a support collar 8 which is fixed to the adjacent side bar 2 in a manner so that the stub pin 7 may slide therein. The inner end of each stub pin 7 is connected to a support plate 9 which is fixed to the vertical leg 1'' of the adjacent tray supporting bar 1. As thus mounted, it will be appreciated that the paired tray supporting bars 1 may be moved horizontally in a manner to vary the distance between them and thus to accommodate trays of varying widths, and additionally to permit retracted separation of the bars as may be required to permit the tray *a* to move downwardly between the horizontal legs 1' of the bars on which the initial tray *a* is normally supported. To limit the inward adjustment of the tray supporting bars 1, a stop cushioning disc 10 may be secured to the outer end of each stud pin 7 as by a screw 12 as shown in Figs. 5 and 7. The rubber washer 11 mounted on the inner face of the stop disc 10 cushions the shock when the tray supporting bars 1 reach maximum inward adjustment.

Means are provided for conveniently manipulating the tray supporting bars 1 in unison and to move them inwardly towards each other to the required degree to conveniently support the tray *a* on the horizontal legs 1' thereof as shown in Fig. 3, and to retract the tray supporting bars sufficiently to permit the tray to pass between the horizontal legs 1' of the bars when the platform of the tray stacking mechanism has been brought to raised position to support the same, as shown in Figs, 3 and 4. The means for thus manipulating the tray supporting bars 1 in unison may

comprise a three way air valve 13 secured as by clamp 14 to the front tubular framing member 38, as shown in Figs. 5 and 6.

The three way air valve 13 operates in conjunction with a pair of bar manipulators 15 designed to uniformly manipulate the tray supporting bars 1 for horizontal movement. Each tray supporting bar 1 is provided with a bar manipulator 15 fixed to the approximate midsection of the adjacent side bar 2 as shown in Fig. 5. Each bar manipulator 15 may comprise an air cylinder 16 capped at each end thereof by suitable caps 17 and 18 between which a piston head 19 is designed to reciprocate. The piston head 19 has a piston rod 19' secured to and extending through packing glands 17' and 18' forming a part of the caps 17 and 18. The piston rod 19' extends through the side bar 2 as illustrated in Fig. 5, and the inner end thereof is provided with a knuckle cap 20 as illustrated in Fig. 7 which is hingedly connected as by pin 21 to an attaching plate 22 secured to the exterior face of the vertical leg 1'' of the adjacent tray supported bar 1. It will be appreciated that movement of the piston 19 will impart a corresponding movement to its associated tray supporting bar 1.

The three way air valve 13 as diagrammatically shown in Fig. 9 is provided with an air intake 23 which is connected to a high pressure air supply line 24 which supplies the power for operating the auxiliary tray supporting device. The high pressure air introduced into the three way air valve 13 may be directed to either one of the two outlets 25 or 26 depending upon the position of the air control handle 27.

Each bar manipulator 15 is provided with a pair of ports 28 and 29. Port 28 is located adjacent to cap 17 and provides means for introducing air into the forward end of the air cylinder 16 of the bar manipulator 15. Port 29 is located adjacent the cap 18 and provides means for introducing air into the rear end of the cylinder 16. The ports 28 and 29 are connected to the ports 25 and 26 of the air valve 13 by air lines 25' and 26'. When the high pressure air is introduced into the port 28 it will move the piston head 19 to the rear of the cylinder 16, and move piston head 19 to impart a corresponding movement to its associated tray supporting bar 1. When high pressure air is introduced into the port 29 it will move the piston head forwardly in the cylinder 16 to impart a corresponding movement to the tray supporting bar 1 in the opposite direction.

The air control handle 27 of the three way air valve 13 may be maintained in either of three positions as shown in Fig. 9, namely a tray holding position, a neutral position or a tray release position. When the air control handle 27 is in neutral position, air does not flow through the valve 13 and tray supporting bars 1 are maintained in static position. When it is desired to manipulate the tray supporting bars 1 into tray supporting position, the operator swings the air control handle 27 to tray holding position to allow compressed air to flow through the three-way air valve 13 through outlet 26, through air line 25' and into the port 29 thereby introducing high pressure air to the air cylinder 16 in a manner to move the piston 19 inwardly and adjust tray supported bars 1 to tray holding position. As the piston 19 moves inwardly, air accumulated in the forward parts of the air cylinder 16 is exhausted through exhaust port 23' of the air valve. When the operator desires to retract the tray supporting bars 1, the control handle 27 is ma-

nipulated to release position shown in Fig. 9 to direct the high pressure air through the air valve 13, through air outlet 25 and into ports 28 of the air cylinder 16, thereby moving the piston 19 rearwardly to retract the tray supporting bars 1.

The action of the high pressure air operates to almost instantaneously advance or retract the tray supporting bars 1 in response to the manipulation of the air control handle 27. Cushioning means 70 as shown in Figs. 5 and 8 may be provided to cushion the retracting movement of the tray supporting bars 1. The cushioning means 70 may comprise a rubber or felt pad 71 which is set into a holder 72 and fixed to the adjacent side bar 2 as by screws 73. A pair of cushioning studs 70 may be secured to each side bar.

It will thus be appreciated that by a simple manipulation of the air control handle 27 the spaced tray supporting bars 1 may be manipulated in a horizontal plane so as to move the bars sufficiently close together to properly support a selected tray on the horizontal legs 1' thereof as shown in Figs. 3 and 4, or to separate the bars 1 from supporting engagement with the tray, as to thereby permit the tray to be moved downwardly therebetween when the platform associated with the tray stacking mechanism B has been raised into supporting position beneath the tray *a*, as shown in Fig. 2.

It will be noted by referring more particularly to Fig. 5, that the side bars 2 of the auxiliary tray supporting device may also be adjusted to any desired spaced relationship to accommodate a series of trays of greater or lesser width. This adjustability is effected by providing the clamp brackets 3 with clamp bolts and associated wing nuts 3', which permit sliding adjustment of the clamp brackets 3 along the framing members 38 and 39 of the tray stacking mechanism B. Provision is thus made for any desired spacing adjustment of the tray supporting bars 1 to accommodate various sizes of trays normally used in the printing of sheets from which carton blanks are to be cut. This improved tray supporting device is thus advantageously constructed to form an integral operating part of the conventional tray stacking mechanism used in association with printing presses designed to print the relative large and heavy sheets from which carton blanks are to be cut.

In utilizing this improved auxiliary tray supporting device in conjunction with the stacking mechanism B, the tray supporting platform 30 is raised to initial starting position at the beginning of the printing run, as illustrated in Fig. 4. The operator of the press manipulates the tray supporting bars 1 to open or tray clearing position, by turning the air control handle 27 to the retracted position as indicated in Fig. 9. The initial tray *a* is then placed to rest on the tray supporting platform 30. When the initial tray *a* has been filled with printed sheets to the desired depth, the operator places an empty tray *b* directly over the filled tray *a* to rest on the side walls of the filled tray *a*. As the sheet printing progresses, successive trays *c, d, e, f, g* and *h* are stacked one upon the other, and the platform 30 and stacked trays supported thereon are incrementally lowered by the press oscillated lever 52 as heretofore explained.

When a convenient stack of filled trays has been assembled on the platform 30, the operator manipulates the hand wheel 50 to lower the topmost tray *h* a sufficient distance to clear the horizontal legs 1' of the tray supporting bars 1 in which position the printed sheets will continue to discharge into the top tray *h*. The operator substantially simultaneously manipulates the air control handle 27 to move the tray supporting bars 1 into tray retaining position. An empty tray *a* is then positioned to rest on the horizontal legs 1' of the tray supporting bars 1, and the succeeding printed sheets are then discharged into the tray *a* thereby permitting the printing run to continue without interruption.

The operator can then leisurely further manipulate the hand wheel 50 to lower the platform 30 to resting position on the conveying truck D which has previously been moved into position under the platform 30. The tray-stacked platform 30 resting on the truck D is then released from the horizontal bars 45 which normally support the platform. This is accomplished by slackening the suspension chains 44 through manipulation of the hand wheel 50, so as to permit the platform supporting bars 45 to be swung laterally from under the platform, or by disconnecting the chains from the platform supporting bars 45 to permit the bars to drop to the floor. The tray loaded truck can then be rolled to that section of the plant where the blank cutting and creasing machine is located.

A second platform can then be placed in position on the platform supporting bars 45 beneath the meanwhile filling tray *a* supported upon the bars 1 of the auxiliary tray supporting device A. Hand wheel 50 is manipulated to raise the second platform 30 into lifting abutment against the bottom of the filling tray *a* as shown in Fig. 4. The air control handle 27 can then be manipulated to retract the tray supporting bars 1 of the auxiliary tray supporting device A to permit the tray *a* to rest upon the platform 30 and be incrementally lowered therewith as the printing run progresses.

By the use of this improved auxiliary tray supporting device in cooperative association with the conventional tray supporting and stacking apparatus, continuous and uninterrupted printing production may be maintained for the entire printing run. Substantial savings in labor and time is thereby advantageously effected and costly interruptions of the printing run which have heretofore been necessary to permit removal and replacement of the stacked trays is entirely avoided. Additionally, important savings in valuable paper stock and printing ink is also effected, with the further assurance that the printing press can be continuously operated during the entire production run at maximum speed and efficiency for high quality work.

While certain novel features of this invention have been disclosed herein, and are pointed out in the claims, it will be understood that various omissions, substitutions and changes may be made by those skilled in the art without departing from the spirit of this invention.

What is claimed is:

1. An auxiliary tray supporting device for stacking apparatus designed for association with a printing press and including a framework having a removable tray supporting platform with means for lowering and elevating the platform, the auxiliary tray supporting device being designed to support a tray when the tray loaded platform of the apparatus is removed and replaced, and comprising, a pair of spaced side frame members positioned outside of the vertical plane of movement of said platform and con-

nected to the apparatus framework, a pair of tray supporting bars positioned between said side frame members designed to support a tray in position to receive printed sheets as discharged from the press, adjustable means operatively connected to each of said bars and the adjacent side frame member supporting the bar for movement in a horizontal plane, said supporting means including a plurality of spaced stud pins having one end secured to the adjacent tray supporting bar, pneumatic means for horizontally manipulating said tray supported bars in unison to move said bars towards each other into tray supporting position and to retract said bars out of tray supporting position to thereby permit the tray to pass downwardly between said bars when said platform has been elevated to support the tray, and resilient means connected to each of said side frame members for cushioning the retracting movement of the adjacent tray supporting bar.

2. In a combination with a tray supporting and stacking apparatus designed for association with a printing press and comprising a framework having a movable tray supporting platform with means for lowering and elevating the platform, of an auxiliary tray supporting device designed to support a tray when the tray loaded platform of the apparatus is removed and replaced, said device including a pair of spaced side frame members positioned outside of the vertical plane of movement of said platform and connected to the apparatus framework, a pair of tray supporting bars positioned between said side frame members designed to support a tray in position to receive printed sheets as discharged from the press, each of said bars having a horizontal tray supporting leg and a vertical leg, adjustable means operatively connected to the vertical leg of each of said bars and the adjacent side frame member supporting the bar for movement in a horizontal plane, pneumatic means for horizontally manipulating said tray supported bars in unison to move said bars towards each other into tray supporting position and to retract said bars out of tray supporting position to thereby permit the tray to pass downwardly between said bars when said platform has been elevated to support the tray, and resilient buffers associated with each of said side frame members for cushioning the inward movement and the retracting movement of each of said tray supporting bars.

3. In combination with a tray supporting and stacking apparatus designed for association with a printing press and comprising a frame work having a movable tray supporting platform with means for lowering and elevating the platform, of an auxiliary tray supporting device designed to support a tray when the tray loaded platform of the apparatus is removed and replaced, said device including a pair of spaced side frame members positioned outside of the vertical plane of movement of said platform and connected to the apparatus framework, a pair of tray supporting bars positioned between said side frame members designed to support a tray in position to receive printed sheets as discharged from the press, each of said bars having a horizontal tray supporting leg and a vertical leg, adjustable means operatively connected to the vertical leg of each of said bars and the adjacent side frame member supporting the bar for movement in a horizontal plane, said supporting means including a plurality of spaced stud pins having one end thereof secured to the adjacent tray supporting bar, a collar slidably receiving each of said stud pins secured to the adjacent side frame member, and a resilient head secured to the other end of each of said stud pins designed to resiliently abut the adjacent end of the associated collar and thereby cushion the inward movement of the adjacent tray supporting bar, pneumatic means for horizontally manipulating said tray supported bars in unison to move said bars towards each other into tray supporting position and to retract said bars out of tray supporting position to thereby permit the tray to pass downwardly between said bars when said platform has been elevated to support the tray, and resilient buffers associated with each of said side frame members for cushioning the retracting movement of the adjacent tray supporting bar.

4. In combination with a tray supporting and stacking apparatus designed for association with a printing press and comprising a framework having a removable tray supporting platform with means for lowering and elevating the platform, of an auxiliary tray supporting device supported by the framework of said apparatus, said device including a pair of spaced side frame members positioned outside the plane of movement of said platform and connected to the apparatus framework, a pair of tray supporting bars located between said side frame members and designed to support a tray in position to receive the printed sheets as discharged from the press, adjustable means for supporting said tray supporting bars from said side frame members for movement in a horizontal plane, and means for horizontally manipulating said paired tray supporting bars in unison to move said bars towards each other into tray supporting position and to retract said bars out of tray supporting position to thereby permit said tray to pass downwardly between said bars when said platform has been elevated to support the tray, said manipulating means including a pneumatic device mounted on each of said side frame members and operatively connected to the adjacent tray supporting bar, and air control means operatively connected to both of said pneumatic devices for manually controlling the manipulation of said tray supporting bars in unison into tray supporting position and alternatively into retracted position to thereby permit a tray supported on the platform to pass downwardly between said bars.

5. In combination with a tray supporting and stacking apparatus designed for association with a printing press and comprising a framework having a removable tray supporting platform with means for lowering and elevating the platform, of an auxiliary tray supporting device supported by the framework of said apparatus, said device including a pair of spaced side frame members positioned outside the plane of movement of said platform and connected to the apparatus framework, a pair of tray supporting bars located between said side frame members and designed to support a tray in position to receive the printed sheets as discharged from the press, adjustable means for supporting said tray supporting bars from said side frame members for movement in a horizontal plane, and means for horizontally manipulating said paired tray supporting bars in unison to move said bars towards each other into tray supporting position and to retract said bars out of tray supporting position to thereby permit said tray to pass downwardly between said bars when said platform has been elevated to support the tray, said manipulating means including an air cylinder mounted on each of said side frame

members, a piston head designed to reciprocate in each of said cylinders and having a piston rod connected to the adjacent tray-supporting bar, and an air control valve operatively connected to both of said air cylinders for manually controlling the manipulation of said tray supporting bars in unison into tray supporting position and alternatively into retracted position to thereby permit a tray supported on the platform to pass downwardly between said bars.

6. In combination with a tray supporting and stacking apparatus designed for association with a printing press and comprising a framework having a removable tray supporting platform with means for lowering and elevating the platform, of an auxiliary tray supporting device supported by the framework of said apparatus, said device including a pair of spaced side frame members positioned outside the plane of movement of said platform and adjustably connected to the apparatus framework, a pair of tray supporting bars located between said side frame members and designed to support a tray in position to receive the printed sheets as discharged from the press, means for supporting said tray supporting bars from said side frame members for movement in a horizontal plane, and means for horizontally manipulating said paired tray supporting bars in unison to move said bars towards each other into tray supporting position to thereby permit said tray to pass downwardly between said bars when said platform has been elevated to support the tray, said manipulating means including an air cylinder mounted on each of said side frame members, a piston head designed to reciprocate in each of said cylinders and having a piston rod flexibly connected to the approximate mid-section of the adjacent supporting bar, a three-way air valve, and air lines connecting said control valve to each of said cylinders, said air valve having a manually operated control handle for controlling the manipulation of said tray supporting bars in unison into tray supporting position and alternatively into retracted position to thereby permit a tray supported on the platform to pass downwardly between said bars.

7. An auxiliary tray supporting device designed for association with the tray supporting and stacking apparatus of a printing press, said device being operable to temporarily support a tray in position to receive printed sheets from the printing press during the interval that the tray loaded platform of the apparatus is removed and replaced, said device including a pair of frame members spaced to permit movement of the platform therebetween, a pair of tray supporting bars positioned between said frame members, slidable means fixed to each of said frame members and the adjacent tray supporting bar operative to support the bar for horizontal movement, said slidable means including a plurality of spaced stud pins having one end secured to the adjacent tray supporting bar and horizontal support collars for said pins, said collars being secured to said frame members, an air piston operatively connected to each of said tray supporting bars for horizontally manipulating said bars in unison into tray supporting position and alternatively in retracted position to thereby permit a tray supported on the platform to pass downwardly between said bars, and a three way control valve for simultaneously controlling the operation of said air pistons.

JOHN J. ISELLA.
PHILIP F. PABST.

REFERENCES CITED

The following references are of record in the file of this patent:

UNITED STATES PATENTS

Number	Name	Date
674,262	Duncan	May 14, 1901
700,238	Read	May 20, 1902
804,312	Hammer	Nov. 14, 1905
1,646,067	Roberts	Oct. 18, 1927
2,113,926	Pierce	Apr. 12, 1938
2,333,479	Graf	Nov. 2, 1943