June 16, 1959 J. LETTERS, JR 2,891,138

METHOD OF AND APPARATUS FOR BONDING THE HEAD OF A GOLF CLUB TO THE SHAFT THEREOF

Filed Feb. 9, 1956

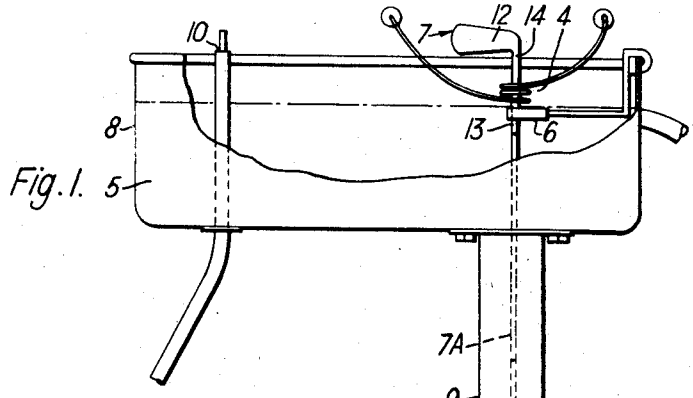

Fig. 1.

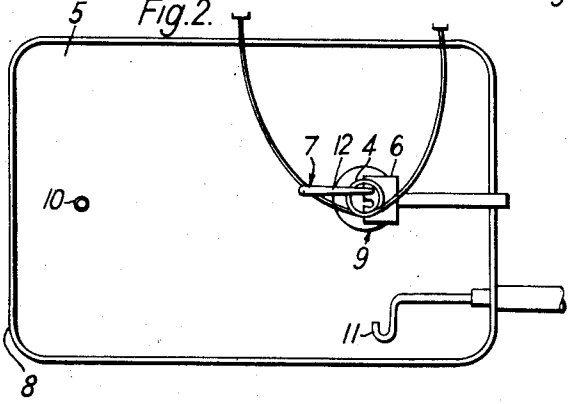

Fig. 2.

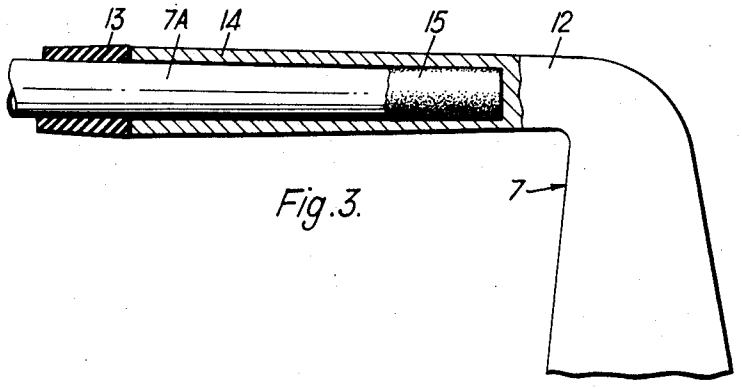

Fig. 3.

Inventor

JOHN LETTERS JR

By Young, Emery & Thompson

Attorneys

United States Patent Office

2,891,138

Patented June 16, 1959

2,891,138

METHOD OF AND APPARATUS FOR BONDING THE HEAD OF A GOLF CLUB TO THE SHAFT THEREOF

John Letters, Jr., Hillington, Glasgow, Scotland, assignor to John Letters & Company Limited, Glasgow, Great Britain

Application February 9, 1956, Serial No. 564,518

Claims priority, application Great Britain February 9, 1955

5 Claims. (Cl. 219—85)

This invention relates to a method and apparatus for bonding the metal head of a golf club to the metal shaft thereof.

The golf clubs which have metal heads (hereinafter referred to simply as golf clubs) are normally these of the "iron" range, that is, excluding the "woods," and consist of two main parts, the shaft and the head. The shaft, which is tapered, is made from tempered steel. The head, for striking the ball, has a stem with a shaft-receiving socket therein and is usually formed either from chromium-plated mild steel or rustless steel; some heads are formed from brass.

A further important part of the club is the ferrule which is usually formed from a plastic and is located at the lower end of the shaft where the shaft meets the head. The ferrule is of tapering shape increasing in size from just thicker than the shaft to the size of the stem portion of the head. The purposes of the ferrule are to act as a shock damper, and to cover the join between the shaft and the head; it is also distinctive and decorative.

A usual method of attaching the head of the club to the shaft is by inserting the lower end of the shaft into the stem of the head and rivetting the two parts together by means of a rivet passing diametrally through the two parts. Such a rivet must be substantially rustless and in the case of a mild steel head the rivet must be of a relatively soft metal—brass is usually used, but the brass rivet (and also, any type of rivet) tends to spoil the appearance of the club. Further, the rivet must be buffed flush with the stem, and this usually results in the removal of part of the surface of the stem.

It is an object of the invention to provide a quick and simple method of bonding the head of a golf club to the shaft thereof, which method will neither result in the permanent disfiguring of any of the visible parts of the club, nor adversely affect the temper of the working shaft.

According to the present invention, I provide a method of bonding the metal head of a golf club to the metal shaft thereof comprising, inserting a piece of solder into the shaft socket, inserting the shaft into the socket, heating locally the region of the club around the end of the shaft in a high-frequency induction coil, and cooling at least the adjacent region of the club remote from the head.

Preferably, said adjacent region of the club, the ferrule on the shaft, and the entire exposed shaft are maintained cool in a liquid bath.

Preferably also, the heated portion is cooled with a liquid spray whenever the heating process is completed.

Further, according to the invention, I provide a method of bonding the metal head of a golf club to the metal shaft thereof, comprising applying localised heat from a high-frequency source to solder located within the stem of the head to cause the solder to melt and so bond the head to the shaft.

Further, according to the present invention, I provide, for bonding, by internal soldering, the metal head of a golf club to the metal shaft thereof, apparatus comprising a high-frequency induction coil, and a cooling bath having an elongated depending portion adapted to receive the club shaft the arrangement being such that a golf club can be located in such a position relative to the coil and the bath that the inner end of that portion of the shaft within the head stem lies within said coil, the level of the cooling medium in said bath being located just below said coil.

Preferably, said cooling medium is cold water and supply and outlet conduits are provided to allow continuous change of water.

Preferably also, positioning means is provided which comprises a plate provided with at least one recess, the edges of which engage the ferrule on a club to position same correctly.

Preferably also, spray means is provided to cool the club head after the heating operation.

The process of the present invention consists essentially in soldering the head to the shaft by means of localised high-frequency heating (also known as induction heating). Localised heating prevents damage to the easily meltable ferrule which must, of course, be in position before the head is attached to the shaft. Also, the high temper of the working shaft is not affected.

An embodiment of the invention will now be described by way of example, with reference to the accompanying drawings, in which:

Fig. 1 is a front elevation (partly sectional) of the apparatus.

Fig. 2 is a plan view of the apparatus.

Fig. 3 is a sectional elevation showing the bonding of the shaft and head by the solder.

The apparatus consists of a 2½ kw. H.F. heater (not shown) including a coil **4**, a cold-water bath **5** located below the coil and a support **6** for the club **7**. The function of the support is to position varying lengths of clubs so that the fixed coil will heat the correct portion of the club. The water bath is of T-shape in side and end elevations and comprises a top bowl **8** and a depending cylinder **9** adapted to receive the club shaft 7A. Additional features include a jet of water **10** for washing the club and a jet **11** for cooling the club head after soldering. Instead of jet **11**, a spray ring surrounding the club can be provided.

The steps of the process are as follows:

(1) The narrower lower end of the shaft 7A is lightly buffed for about ⅜" and the end of the shaft is chamfered at about 45°. Care is taken to keep the prepared end clean until insertion into the head **12**.

(2) The inside of the head is degreased.

(3) A plastic ferrule **13** is pushed onto the shaft and accurately positioned relative to the chamfered end, and the head is pushed onto the shaft till the stem **14** abuts the ferrule. The stem socket is enlarged by a tapered reamer till its position on the shaft is correct—the head is a push fit on the shaft.

(4) The head is removed and the stem socket is washed out by the washing jet **10**.

(5) Flux paste is smeared onto the mouth of the stem socket and a ring of silver solder is placed at the mouth.

(6) The shaft **9** is then pushed into the stem socket—this action pushes the flux and the solder ring into the socket of the stem.

(7) The club is then inserted into the water bath **5**, the support **6** engaging the ferrule **13** to hold the club in the correct position, that is, with the end of the shaft inside the H.F. coil. In this position, the complete exposed shaft, the ferrule, and about the first ¼ inch of the stem are immersed in water.

(8) The coil is then energized for about 15 seconds,

when the outside of the head stem glows red at a temperature of about 750° C. This causes the solder **15** (Fig. 3) to melt and spread for about ½ inch along the shaft.

(9) The coil is then de-energized and water is sprayed from a jet **11** or a circular spray surrounding the club, onto the stem **14** to cool same.

(10) The club is then removed from the water bath and the solder bond is tested by hammering a long rod down the shaft in the attempt to push the head from the shaft.

(11) The outside of the head stem **14** appears dulled and this dulling is removed by buffing the stem on a wheel having a fibrous rim.

(12) The club is otherwise finished, for instance the hand grip and top peg are applied.

As a result of the invention, the head and the shaft of a gold club can be rigidly bonded together in a very quick and simple manner. Also, the ferrule is undamaged, and the shaft, which is, of course, highly tempered, is not adversely affected by the heating, apart, possibly, from an end half-inch or so which is, however, bonded to the head.

Modifications may be made to the invention.

For instance, instead of silver solder, soft solder can be used—this has the advantage of requiring less heat, but may not give quite such a strong bond. Alternatively, brass may be used as a solder in some cases—this gives a strong bond, but may require a greater degree of heat.

It will be understood that the term "soldering" means the joining together of the two metal parts by means of a further metal of relatively low melting-point. The solder rings are easily formed from solder wire appropriately cut and bent to shape.

In a further embodiment, more than one club may be treated at the same time. In this case the method is as before, except that the support is provided with, say, four suitably arranged recesses to hold four clubs in position. When a plurality of clubs is treated higher power must be used or the time of treatment must be increased.

The form of the cooling means may also be altered but the simplest form has been found to be a top bath having a downwardly extending portion located directly below the coil. It will be appreciated that the water in the bath is continuously being changed, usual inlet and constant-level outlet pipes being provided.

Foot pedals may be provided to control the energizing of the coil and the washing and cooling jets.

A 2½ kw. radio-frequency heater has proved very satisfactory in use, but it will be appreciated that H.F. heaters of other strengths and types may be employed.

The support is not an essential part of the apparatus—

the club may be held by hand during the heating process, and thereafter cooled.

I claim:

1. A method of bonding the metal head of a golf club to the metal shaft thereof comprising locating a ferrule on the club shaft, inserting a piece of solder into the shaft socket in the club head, inserting the shaft into the socket so that the solder lies within the socket and the ferrule lies at the socket mouth, heating locally a region of the club around the end of the shaft between the ferrule and the club head, in a high-frequency induction coil to melt the solder, and cooling at least an adjacent region of the club remote from the head portion and beyond the solder.

2. A method according to claim 1, in which said adjacent region of the club, the ferrule on the shaft, and the entire exposed shaft are maintained cool in a liquid bath.

3. A method according to claim 1, in which the heated region is cooled with a liquid-spray whenever the heating process is completed.

4. Apparatus for bonding by internal soldering the metal head of a golf club to the metal shaft thereof, comprising a cooling bath having an elongated tubular depending portion opening from the bottom of the bath and adapted to receive the club shaft, and a high-frequency induction coil mounted over the bath and adapted to embrace the socket in the club head housing the end of the shaft so that the inner end of that portion of the shaft within the head socket lies within said coil, the level of the cooling medium in said bath being located just below said coil.

5. Apparatus according to claim 4, in which positioning means is provided which comprises a plate provided with at least one recess, the edges of which engage the ferrule on a club to position same correctly.

References Cited in the file of this patent

UNITED STATES PATENTS

1,433,082	Mauck	Jan. 23, 1923
1,550,157	Gillette	Aug. 18, 1925
1,615,591	Mallory	Jan. 25, 1927
2,174,218	Greene	Sept. 26, 1939
2,469,640	Gillespie	May 10, 1949
2,485,769	Phelps	Oct. 25, 1949

FOREIGN PATENTS

447,270	Great Britain	May 11, 1936
644,821	Great Britain	Oct. 18, 1950

OTHER REFERENCES

American Machinist, pg. 81, April 21, 1949 edition. (Copy in Div. 37.)