Jan. 4, 1927. 1,613,441

T. F. CHEEK

RECORD CONTROLLED MUSICAL INSTRUMENT

Filed Sept. 25, 1923 3 Sheets-Sheet 1

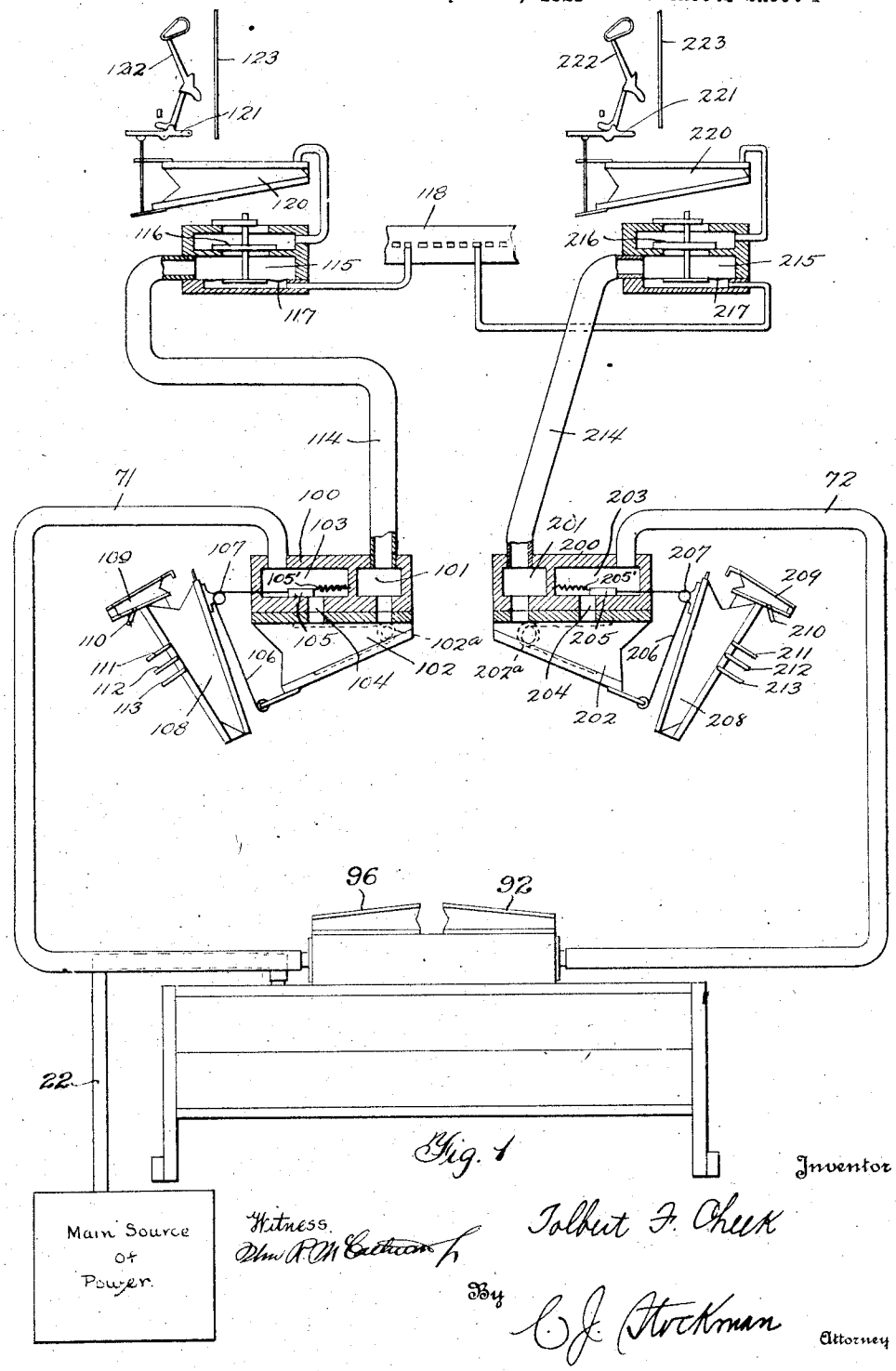

Fig. 1

Inventor

Witness.

Wm. R. McCutcheon Jr.

Tolbert F. Cheek

By C. J. Stockman

Attorney

Jan. 4, 1927. 1,613,441

T. F. CHEEK

RECORD CONTROLLED MUSICAL INSTRUMENT

Filed Sept. 25, 1923 3 Sheets-Sheet 2

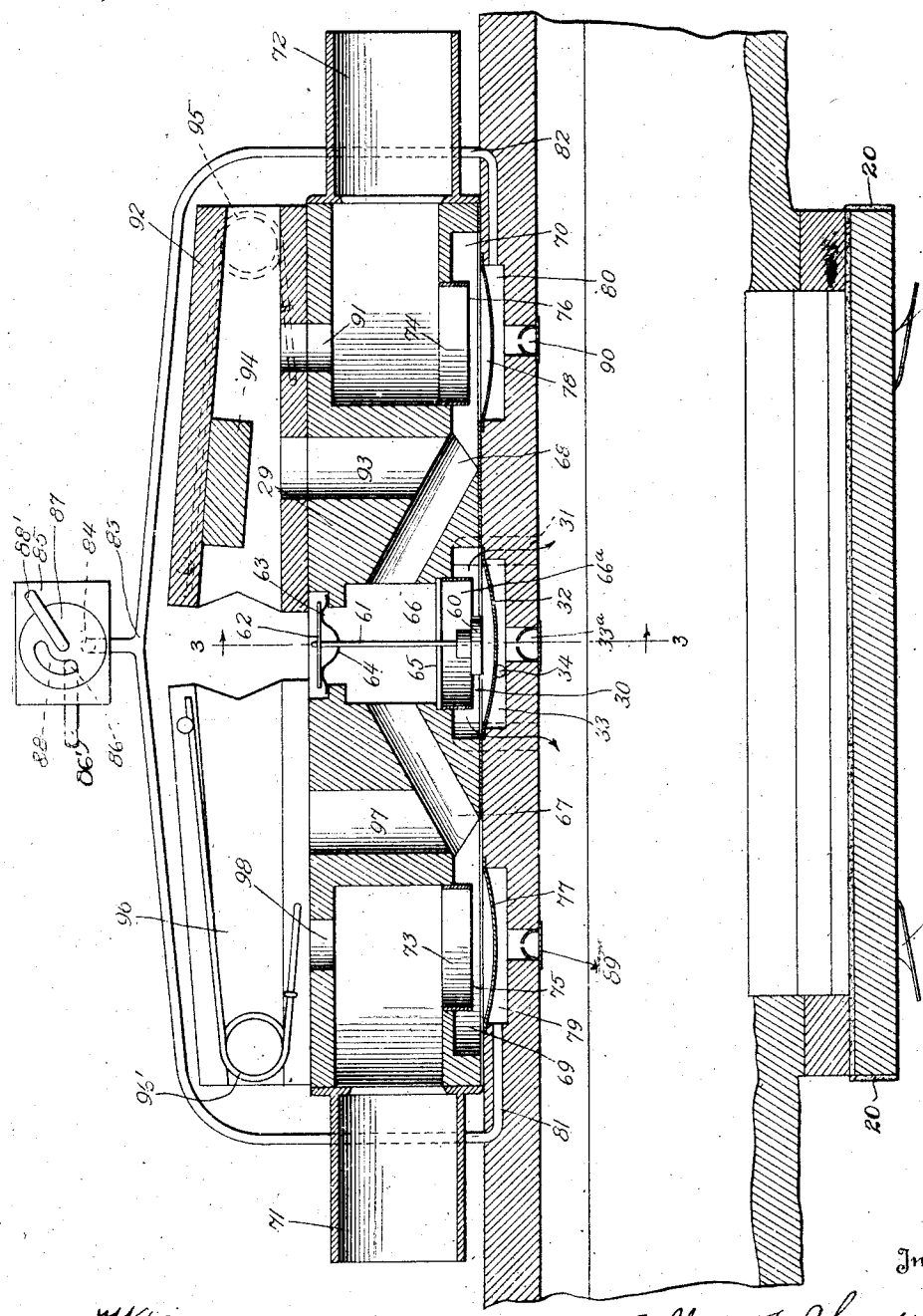

Fig. 2.

Witness
Wm. P. McCutcheon Jr.

Inventor
Talbot F. Cheek
By C. J. Stockman
Attorney

Jan. 4, 1927. 1,613,441

T. F. CHEEK

RECORD CONTROLLED MUSICAL INSTRUMENT

Filed Sept. 25, 1923 3 Sheets-Sheet 3

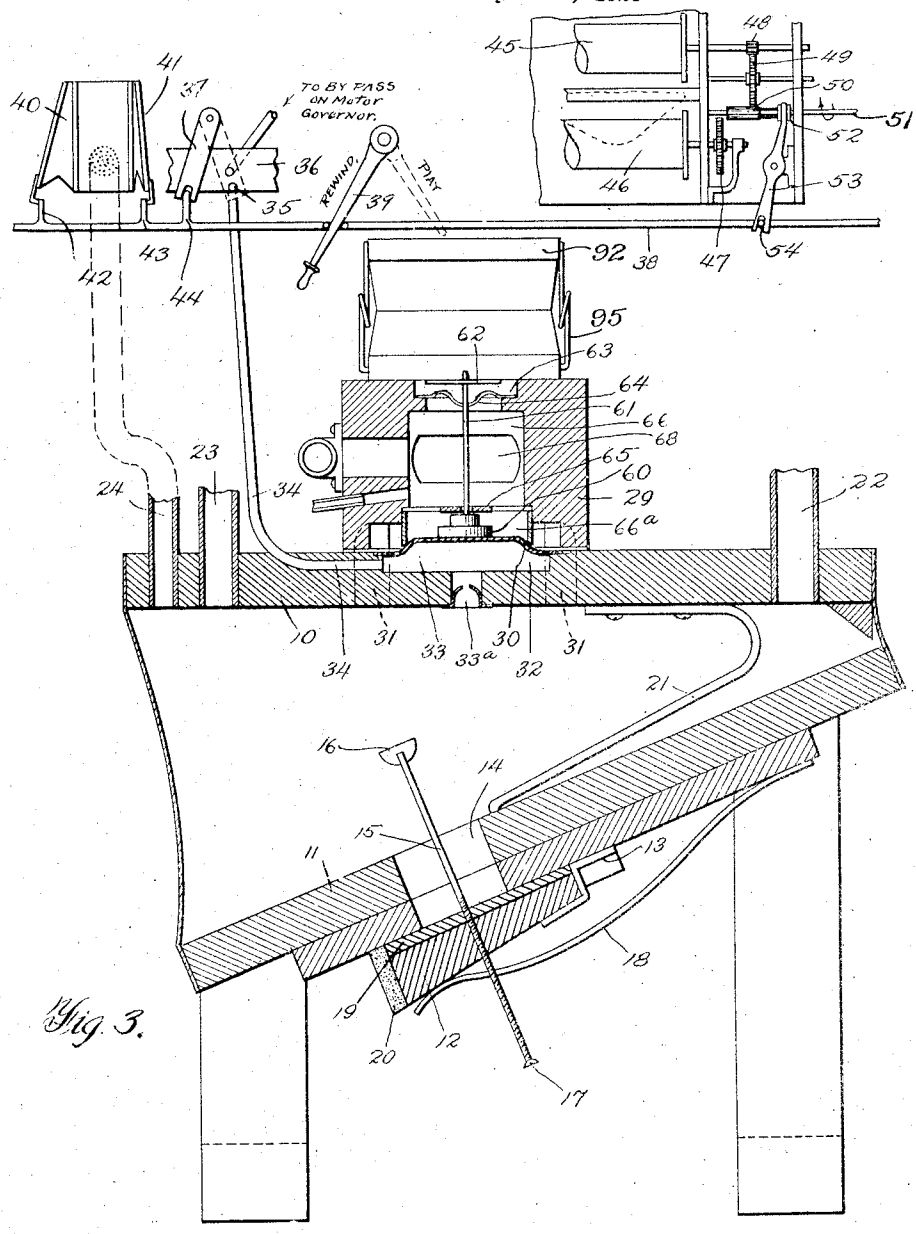

Fig. 3.

Witness:

Inventor

Talbert F. Cheek

By C. J. Stockman

Attorney

Patented Jan. 4, 1927. 1,613,441

UNITED STATES PATENT OFFICE.

TOLBERT F. CHEEK, OF NEW YORK, N. Y., ASSIGNOR TO WELTE-MIGNON CORPORATION, OF NEW YORK, N. Y., A CORPORATION OF NEW YORK.

RECORD-CONTROLLED MUSICAL INSTRUMENT.

Application filed September 25, 1923. Serial No. 664,708.

This invention relates to record controlled musical instruments and particularly to instruments provided with means for controlling the expression of the music from the record.

The primary object of my invention is the provision of improved means for the control of the air being delivered to the main reservoir of a record controlled musical instrument.

Another object of my invention is the provision of a unit attached to the reservoir of a record controlled musical instrument and having embodied therein control means for rendering the tonal expression less in volume while still permitting the expression means to function in its normal manner.

Another object of my invention is the provision of a means in the main tension line which will flush the main air channel simultaneously with the operation of the valve to cut off the tension supply, thus preventing the striking of one or two notes, from the tension in the air channel, after the interruption between the main air channel and reservoir has been made.

Another and further object of my invention is the provision of an improved releasing valve for the reservoir bellows, for quietly releasing the tension when the same becomes too great in the reservoir.

Referring to the drawing, where I have illustrated an embodiment of my invention,

Fig. 1 is a diagrammatic view showing my invention as a part of the mechanism of a reproducing piano,

Fig. 2 is an enlarged cross sectional view of the unit attached to the main reservoir,

Fig. 3 is a cross sectional view taken on the line 3—3 of Fig. 2 but showing, in addition, a diagrammatic representation of the connections from the main cut-off valve to the rewind lever controlled valve.

10 designates the stationary member and 11 the movable member of a reservoir bellows. A flap valve 12 is hinged at 13 to the movable member 11 and covers a port 14. A stem 15 is threaded in the valve 12 and carries at its inner end a pad 16. Its outer end is arranged with a suitable means for adjustment as the screw head 17. Resilient means as the leaf springs 18 are provided for holding the valve normally in closed position. The seat 19 of the valve is of suitable material such as fine leather.

A particular feature of this valve is a strip of porous sound-deadening material 20 which extends from one end of the hinge 13 around the movable sides of the valve to the opposite end of the hinge. The porous material extends to the edge of the valve adjacent the valve seat and preferably contacts therewith. Such a suitable porous material is found in felt.

Suitable springs as the springs 21 hold the reservoir bellows normally in expanded position.

Under the influence of exhaust tension through the duct 22, the bellows collapses. If insufficient air is supplied to expand the bellows, the latter will collapse until the stem 15, by its pad 16, contacts with the wall of the stationary board 10. A further collapse of the movable member, causes the valve to be opened and air to be admitted through the port 14. The air being admitted, contacts with and passes through the felt edging 20 with the result that there is no noise.

The duct 22 is connected to the main source of power shown on Fig. 1. The duct 23 is connected to the winding motor (not shown). The duct 24 is connected to the rewind and replay shifting pneumatics. All of these connections are well known in the art and it is not thought necessary to describe them further in this application. It is to be noted, however, that these ducts are always connected to the reservoir.

I will now describe the unit which, in the present embodiment, comprises, in part, a block 29 and is attached to the non-movable member of the reservoir pneumatic, the unit having portions in the said non-movable member.

Connected to the interior of the reservoir and extending through the non-movable member of the reservoir, to the chamber 30, are the ducts or openings 31. These ducts 31 are four in number and are arranged at the outer periphery of the chamber 30. In the center of the chamber 30 at its lower side (as shown in Fig. 2) is a diaphragm cut off or pouch member 32. This pouch member

32, which also acts as a cut off valve covers a chamber 33 therebelow, the latter being connected by a duct 34, to a port 35 in a block 36 adjacent the tracker box. Alternately covering and uncovering the port 35 is an oscillating valve 37 which is operated by the rewind operating rod 38. This rod 38 is operated by the hand lever 39 to "rewind" or "play" position or it may be operated under control of the record by the replay pneumatic 40 and the rewind pneumatic 41. The rod 38 is provided with extensions 42, 43 which engage, respectively, the replay and rewind pneumatics 40 and 41. An extension 44 connects the rod 38 with the oscillating valve 37 to operate the same in an obvious manner.

At 45 and 46, I have shown the music and take-up rolls, respectively.

I have illustrated a conventional drive gear for the rolls consisting of a gear 47 on the shaft with the take-up roll, a pinion 48 on the shaft which carries the music roll 45. Meshing with the pinion 48 is the gear 49 with which meshes the shiftable pinion 50 mounted on the motor shaft 51. The shiftable pinion may mesh either with the gear 49, as already stated, or it may be shifted so as to mesh with the gear 47. Attached to the gear 50 is a collar 52 which is slidable with the pinion 50 along the shaft 51. A lever 53 pivoted intermediate its ends, engages the collar 52 at one end and the extension 54 on the rod 38 at its other end. It is clear, from the above, that the longitudinal movement of the rod 38 will shift the gearing so that the music record will be wound on either the music roll 45 or the take-up roll 46, as the shaft 51 rotates, depending upon the position of the pinion 50.

Above the diaphragm or pouch member 32 is a valve operating member 60 which is mounted on the end of a valve stem 61. On the upper end of the valve stem 61 is a flushing or vent valve 62 which contacts with a valve seat 63. The valve stem 61 is mounted in a guide 64 which is shown as attached to the valve seat and a guide 65 spaced from the guide 64.

The valve seat 63 is located at one end of a chamber 66. At the other end of this chamber 66 is a collar 66^a set into the body of the unit block 29 adjacent the pouch member 32 and in position to be engaged thereby when the pouch member is inflated.

Extending from the chamber 66, at opposite sides thereof, are ducts 67 and 68, the former leading to the bass side of the instrument and the latter to the treble side. The ducts 67 and 68 connect the chambers 69 and 70, respectively.

Large ducts 71 and 72 connect to the bass and treble wind chests, respectively, and have openings 73, 74, respectively, into the chambers 69 and 70. About these openings 73, 74 are flanged collars having, respectively, lower edges 75, 76 in position to be engaged by diaphragms 77, 78. The diaphragms 77, 78 are in position to cover chambers 79, 80 which have communicating ducts 81, 82 coming together into a common duct at 83 and terminating in a port 84 which is located in a small valve block 85; the latter being preferably located in the tracker box or at some other accessible place. At another part of the block is a port 86 connected to atmosphere by the tube 86′. The ports 84 and 86 are in the same plane. On a center equidistant from the ports 84 and 86 is pivoted a valve 87 having on its under side adjacent the surface, in which are the ports 84 and 86, a depression 88 which when the valve 87 is turned at the proper angle, will cause the ports 84 and 86 to be communicating. The valve 87 is manipulated by a suitable handle 88′ to open the port 84 to atmosphere or to close it for a purpose to be described. A bleed 89 is provided making a connection through a small hole from the chamber 79 to the interior of the reservoir. Similarly a bleed 90 connects the chamber 80 with the interior of the reservoir.

The duct 71 is connected to the duct 67 and the duct 72 to the duct 68 in another way. As both connections are similar, only one will be described.

At the upper side of the inner end of the duct 72 (as shown in Fig. 2) is an opening 91 which connects with the interior of a soft regulator pneumatic having a movable member 92. Extending in a similar direction from the duct 68 is a duct 93 which also leads into the interior of the same pneumatic. On the inner wall of the movable member 92 of the pneumatic is a valve 94 which may be of felt or similar material. A spring 95 is provided between the movable and non-movable members of the regulator pneumatic and normally tends to hold the regulator pneumatic in expanded position.

A soft regulator pneumatic 96 is provided for the bass side of the instrument and has a similar construction to the soft regulator pneumatic for the treble side which has just been described. A spring 96′ normally tends to hold the pneumatic expanded. A duct 97, similar to the duct 93, connects the duct 67 with the interior of the pneumatic 96. Similarly a duct 98 is provided to connect the duct 71 with the interior of the pneumatic 96. The pouch valves 77, 78 act as by-pass valves for the regulator pneumatics 96, 92.

The ducts 71 and 72 are connected, respectively, with the main regulator mechanism for the bass and treble. This mechanism comprises the chest 100 having a chamber 101 connected to the interior of the main bass regulator pneumatic 102 which is normally held expanded by a suitable spring 102^a. Connected also to the interior of the

regulator pneumatic 102 is the chamber 103 by the port 104. The port 104 is controlled by the valve 105 which is controlled in its movement by the movement of the regulator pneumatic 102 in one direction and by the spring 105′ in its return movement.

The movable member of the regulator pneumatic 102 and the valve 105 are connected together by a cable 106 which passes over a pulley 107. This pulley 107 is carried by the movable member of the expression pneumatic 108. This expression pneumatic is provided with a mezzo forte pneumatic 109 which is controlled by the exhausting or flushing of the tube 110. The position of the expression pneumatic is controlled by the exhausting or flushing of the same through the ducts 111, 112, 113. The ducts 110, 111, 112, 113 are controlled in a manner well known in the art as set forth in the patent to Welte and Bockisch, 1,008,291.

The chamber 103 is connected to the duct 71 already described. The chamber 101 is connected to a duct 114 which is attached at its other end to the bass chamber 115 of the action chest. Suitable and well known valve mechanism such as the primary control valve 116, under control of the pouch 117 from the tracker 118, controls the movement of the striker pneumatic 120 to operate the wippen 121, and the hammer 122 which strikes the string 123 of the instrument.

The parts 200, 201, 202, 202ª, 203, 204, 205, 205′, 206, 207, 208, 209, 210, 211, 212, 213, 214, 215, 216, 217, 220, 221, 222, 223 correspond to parts 100 to 123, except that the former are in the treble and the latter in the bass. The duct 72, already described, connects the chamber 203.

The springs 102ª, 202ª of the main regulator pneumatics are stronger than the springs 96′ and 95 of the soft pneumatics which gives the regulators different characteristics as will be later described.

I will now describe the operation of the several parts as they cooperate in the operation of the instrument.

The normal position of the valve handle 88′ is such that the port 84 is closed to atmosphere. This permits the bleeds 89 and 90 to provide exhaust tension below the pouches 77 and 78, respectively. The pouches consequently are in deflated condition.

In the normal course of playing, air enters the wind chest 115 past the valve 116 as the latter is operated and then passes through the duct 114, the chamber 101 into the regulator pneumatic 102, out past the valve 105, into the chamber 103, through the duct 71, the port 73 into the chamber 69, through the duct 67, into the chamber 66, through the collar 66ª, to the chamber 30, thence through the four ducts 31, into the main reservoir and out the duct 22 to the main exhaust pump.

When, however, the end of the music selection is reached, it is necessary to start the rewind mechanism to reverse the direction of the sheet to roll it back upon its music roll. When this is done, it is necessary to quickly and effectively cut off the tension in the action chest in order that as the music sheet reverses and uncovers the tracker perforations, notes will not be sounded. In the past, it has been necessary to provide an extended length to the sheet between the end of the music and the rewind opening. This was for the purpose of permitting the tension to die out after the action cut-off valve had been operated. In the present construction, when the rewind rod 38 is moved to rewind position the pivoted valve 37 uncovers the port 35, flushing the chamber 33, causing the pouch 32 to be raised to engage the collar 66ª. Since the area of the pouch, being pressed upwardly by the atmosphere through the duct 34, is greater than the area of the opening of the collar 66ª, the pouch 32 will be held against the edge of the collar 66ª with the result that the tension to the wind chest is cut-off.

Simultaneously with this action, however, is the opening of the chamber 66 to atmosphere, thereby reducing the tension in the action chest by permitting the air, at atmospheric pressure, to enter the bass action chest through the duct 67 and the treble action chest through the duct 68. It is understood that the course of the air for the treble side of the instrument is similar to the course of the air on the bass side which has been previously described.

As the pouch 32 is inflated, the valve operating member 60, lifts the valve stem 61 which slides in the guides 64 and 65 and lifts the valve 62 off of its seat 63. The result is that whatever exhaust tension, is in the wind chests, is destroyed by the entry of air at atmospheric pressure.

As soon as the rod 38 is moved to "play" position, the duct 35 is closed, shutting off the supply of air to the chamber 33 below the pouch 32. A bleed 33ª, which is connected to the interior of the reservoir, serves to permit the air in the chamber 33 to escape and cause the pouch 32 to fall in a well known manner. As the pouch 32 falls the valve 62 falls and the atmospheric connection to the ducts 67 and 68, through the chamber 66, is cut off, at the same time as communication is established with the exhaust in the chamber 30 due to the fall of the pouch 32 away from the collar 66ª.

By the construction and operation just described, the rewind perforation may follow directly after the last note perforation in the sheet, thus saving considerable time in getting the roll back to its rolled condi-

tion, ready to replay or be replaced by another roll.

When during the pumping operation the air taken from the system is greater than the amount permitted to enter by way of the valves connected with the operation of the striker, control, expression and wind motor pneumatics, then the main reservoir will collapse until the pad 16 of the adjustable rod of the relief valve 12, contacts with the non-movable member of the reservoir. Any further tendency to collapse is prevented by the slight opening of the reservoir. With this opening, the air is permitted to enter the reservoir and due to the porous sound-deadening strip 20, the entry of the air is without sound. As the air being supplied, from the operating mechanism, becomes equal to the air being exhausted, the valve 12 closes.

Whenever it is desired to play using the expression mechanism but to soften those notes which are to be played above pianissimo while maintaining a loud and soft relation between the notes, the so-called "soft-Welte" valve 87 is operated by the handle 88′ to admit atmosphere by way of the port 86, depression 88, port 84, ducts 81 and 82 to the chambers 79 and 80 below the respective pouches 77 and 78. As the amount of air admitted in this manner is more than the bleeds 89 and 90 can exhaust, the pouches 77 and 78 are forced upwardly against the edges 75 and 76 of the openings 73 and 74. As the area of the pouches is greater than the areas of the openings 73 and 74, the atmospheric pressure forces the pouches against the edges of the openings and cuts off the admission of air at these points. Referring to the treble side of the instrument, Fig. 2, it will be seen that the air, although cut off at 74, may pass out through the duct 91 into the soft regulator, past the valve 94 through the duct 93 and into the duct 68 and thence, as already described, to the reservoir. The same action takes place on the bass side when the pouch 77 causes the air to take a course by way of the opening 98 into the regulator 96 and out to the duct 67 by way of the duct 97.

Since the springs of the soft regulators are of less strength than the springs of the main regulators, the soft regulators will control the pressure used. Under these conditions, the regulators 102 and 202 will maintain their wide open positions as the tension which the spring 96′ and 95 will maintain is not sufficient to collapse the springs 102^a and 202^a. The expression pneumatics and their control devices will continue to operate and will modify the strength of the notes by modifying the tension maintained in the chambers 101 and 201 by movement of the valves 105 and 205 under control of the pulleys 107 and 207.

The action of the soft regulators is to reduce the pressure to the desired point which might be pianissimo. Then when the valves 105 and 205 are opened by the collapse of the pneumatics 108 and 208, the pressure is increased but cannot go beyond a certain amount which is limited by the strength of the springs 96′ and 95. Any tendency to increase the pressures beyond this point is met by the effectual closing of the valve 94 and its companion within the pneumatic 96.

When it is desired to increase the tones to normal, it is only necessary to operate the "soft Welte" handle 88′ to the "loud" position. This action cuts off the atmospheric pressure to the chambers 79 and 80 and permits the bleeds 89 and 90 to exhaust the air therefrom. This action permits the pouches 77 and 78 to fall. The air passages from the duct 71 to the duct 67 and also from the duct 72 to the duct 68, are opened directly without going through the soft regulators. The result is that the pressure in the main reservoir is transmitted to the chamber 103 and 203 of the main regulator pneumatics. This causes the increase of the tension in the regulator pneumatics 102, 202 with the result that normal playing is restored.

While I have shown and described in detail an embodiment of my invention, I desire to have it understood that the showing is merely illustrative and that modifications and changes may be made without departing from the spirit of my invention and within the scope of the appended claims.

Reference is hereby made to my co-pending application filed November 5, 1920, Serial Number 421,821 which describes and generically claims matter shown and described herein.

Having described my invention, what I claim is:—

1. In a record controlled musical instrument, a plurality of wind chests and a source of power, ducts leading from the source of power to the respective wind chests, a plurality of regulators of different characteristics connected to and arranged to control the passage of air in the ducts to each of the respective chests, a pneumatically controlled means for controlling a by-pass around one of the regulators and cut-off valve means for stopping the passage of air in one of the ducts.

2. In a record controlled musical instrument, a plurality of wind chests and a source of power, ducts leading from the source of power to the respective wind chests, a plurality of regulators of different characteristics connected to and arranged to control the passage of air in the ducts to each of the respective chests, pneumatically controlled means for controlling a by-pass around one of the regulators and cut-off valve means for stopping the passage of air in the ducts.

3. In a record controlled musical instrument, a plurality of wind chests and a source of power, a main duct connection to the source of power, branch ducts leading from the main duct to a plurality of respective wind chests, a plurality of regulators of different characteristics connected to and arranged to control the passage of air in each of the branch ducts, a pneumatically controlled means for controlling a by-pass around one of the regulators and cut off valve means for stopping the passage of air between the source of power and the branch ducts.

4. In a record controlled musical instrument, a wind chest and a source of power, a regulator pneumatic, another regulator pneumatic of different characteristics, valves controlled by the respective regulator pneumatics, ducts connecting the source of power with the wind chest and controlled by the regulator valves, a by-pass to prevent the operation of one of the regulator valves and comprising a cut-off means, a pneumatic expansible chamber adjacent the cut-off means and controlling the position of the cut-off means.

5. In a record controlled musical instrument, a wind chest and a source of power, a regulator pneumatic, another regulator pneumatic of different characteristics, valves controlled by the respective regulator pneumatics, ducts connecting the source of power with the wind chest and controlled by the regulator valves, a by-pass to prevent the operation of one of the regulator valves and comprising a pouch pneumatic, the movable member of which forms a cut-off valve, a hand operated valve and a direct duct connection between the hand operated valve and the pneumatic.

6. In a record controlled musical instrument, a plurality of wind chests and a source of power, a duct connection leading from the source of power and having branches to each wind chest, a plurality of regulators of different characteristics connected to and arranged to control the duct connection to each wind chest, a pouch valve-pneumatic controlling a by-pass around one of the regulators of one of the ducts and means for controlling the operation of the pouch.

7. In a record controlled musical instrument, a plurality of wind chests and a source of power, a duct connection leading from the source of power and having branches to each wind chest, a plurality of regulators of different characteristics connected to and arranged to control the duct connection to each wind chest, a pouch valve-pneumatic, controlling a by-pass around one of the regulators of each of the ducts and humanly controlled means for controlling the operation of the pouch.

8. A record controlled musical instrument comprising a wind chest, a main reservoir, connections between the wind chest and reservoir for supplying tension from the latter to the former and means for simultaneously interrupting the said connections and flushing the wind chest.

9. A record controlled musical instrument comprising a wind chest, a main reservoir, connections between the wind chest and reservoir for supplying tension from the latter to the former and record controlled means for simultaneously interrupting the said connections and flushing the wind chest.

10. A record controlled musical instrument comprising a wind chest, a main reservoir, connections between the wind chest and reservoir for supplying tension from the latter to the former and means, comprising a single power member, for simultaneously interrupting the said connections and flushing the wind chest.

11. A record controlled musical instrument comprising a wind chest, a main reservoir, connections between the wind chest and reservoir for supplying tension from the latter to the former and means for controlling the tension in the connections, said means comprising a cut-off valve, a flushing valve and a connection between the two to operate one from the other.

12. A record controlled musical instrument comprising a wind chest, a main reservoir, connections between the wind chest and reservoir for supplying tension from the latter to the former and means for controlling the tension in the connections, said means comprising a pneumatic power means, the upper surface of which forms a valve, a separate flushing valve and an operating member between the two to operate the latter from the former.

13. A record controlled musical instrument comprising a plurality of wind chests, a reservoir, connections between the wind chests and the reservoir to supply tension from the latter to the former, said connections comprising a chamber having a duct leading to the reservoir and separate ducts leading to the wind chests, a valve for interrupting the passage of air between the reservoir and the chamber and an atmospheric valve for admitting air to the ducts leading to the wind chests.

14. A record controlled musical instrument comprising a plurality of wind chests, a reservoir, connections between the wind chests and the reservoir to supply tension from the latter to the former, said connections comprising a chamber having a duct leading to the reservoir and separate ducts leading to the wind chests, a valve for interrupting the passage of air between the reservoir and the chamber, an atmospheric valve for admitting air to the ducts leading to the wind chests and record controlled

pneumatic means for controlling the operation of the interrupting and atmospheric valves.

15. A record controlled musical instrument comprising a plurality of wind chests, a reservoir, connections between the wind chests and the reservoir to supply tension from the latter to the former, said connections comprising a chamber having a duct leading to the reservoir and separate ducts leading to the wind chests, a valve for interrupting the passage of air between the reservoir and the chamber, an atmospheric valve for admitting air to the ducts leading to the wind chests and a record controlled pneumatic means including a single duct for simultaneously controlling the operation of the interrupting and atmospheric valves.

16. A record controlled musical instrument comprising a plurality of wind chests, a reservoir, connections between the wind chests and the reservoir to supply tension from the latter to the former, said connections comprising a chamber having two valve seats and having communication to the reservoir past the one valve seat and the atmosphere past the other valve seat, a pneumatic having a flexible portion in position to engage the valve seat on the side communicating with the reservoir and forming a valve to stop communication, an atmospheric valve in position to engage the atmospheric valve seat and having an extension to the flexible portion of the pneumatic to cause the opening of the atmospheric valve when the pneumatic is operated.

17. A record controlled musical instrument comprising a plurality of wind chests, a reservoir, connections between the wind chests and the reservoir to supply tension from the latter to the former, said connections comprising a chamber having two valve seats and having communication to the reservoir past one valve seat and the atmosphere past the other valve seat, a pneumatic having a flexible portion in position to engage the valve seat on the side communicating with the reservoir and forming a valve to stop communication, an atmospheric valve in position to engage the atmospheric valve seat and having an extension to the flexible portion of the pneumatic to cause the opening of the atmospheric valve when the pneumatic is operated and means under the control of the record for causing the operation of the pneumatic.

18. In a record controlled musical instrument, a main reservoir comprising a non-movable member and a movable member, a vent valve, a soft contacting member on the valve, a porous sound deadening sheet adjacent the edge of the valve and means for opening the valve when the movable member approaches the non-movable member to a predetermined point.

In testimony whereof I affix my signature.

TOLBERT F. CHEEK.