Office de la Propriété Intellectuelle du Canada
Un organisme d'Industrie Canada

Canadian Intellectual Property Office
An agency of Industry Canada

CA 2474995 C 2011/11/22

(11)(21) **2 474 995**

(12) **BREVET CANADIEN**
**CANADIAN PATENT**

(13) **C**

(86) Date de dépôt PCT/PCT Filing Date: 2004/06/29
(87) Date publication PCT/PCT Publication Date: 2005/01/07
(45) Date de délivrance/Issue Date: 2011/11/22
(85) Entrée phase nationale/National Entry: 2004/07/27
(86) N° demande PCT/PCT Application No.: KR 2004/001574
(87) N° publication PCT/PCT Publication No.: 2005/004135
(30) Priorités/Priorities: 2003/07/07 (KR2003-45824); 2003/07/16 (KR2003-48747); 2003/09/15 (KR2003-63591); 2003/09/22 (KR2003-65628)

(51) Cl.Int./Int.Cl. *G11B 20/10* (2006.01), *G11B 5/09* (2006.01), *G11B 7/0045* (2006.01), *G11B 7/005* (2006.01)

(72) Inventeurs/Inventors:
KIM, JIN YONG, KR;
SUH, SANG WOON, KR

(73) Propriétaire/Owner:
LG ELECTRONICS INC., KR

(74) Agent: SMART & BIGGAR

(54) Titre : SUPPORT D'ENREGISTREMENT, METHODE CONNEXE DE CONFIGURATION DE DONNEES DE CONTROLE, METHODE CONNEXE D'ENREGISTREMENT ET/OU DE LECTURE ET APPAREIL CONNEXE

(54) Title: RECORDING MEDIUM, METHOD OF CONFIGURING CONTROL INFORMATION THEREOF, RECORDING AND/OR REPRODUCING METHOD USING THE SAME, AND APPARATUS THEREOF

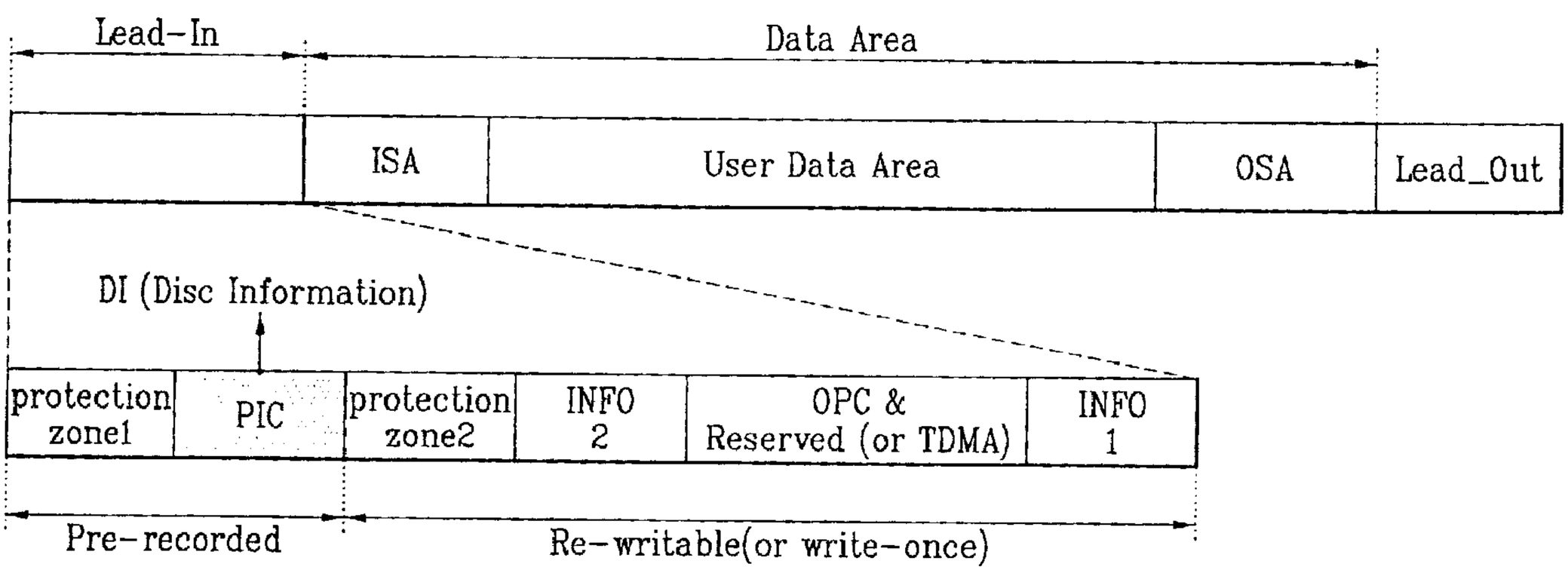


- ISA : Inner Spare Area
- OSA : Outer Spare Area
- PIC : Permanent Information & Control data
- TDMA : Temporary Defect Management Area

(57) Abrégé/Abstract:
A method of recording disc control information in a recordable optical disc including at least one recording layer is provided. Writing speed information and per writing speed write strategy are included in disc control information. The specified disc control information can be uniformly applied to efficiently cope with the record/playback of the optical disc. In configuring disc control information within a management area of an optical disc, the method includes recording a plurality of recording speed informations and a plurality of write strategies respectively associated with corresponding recording speeds within the disc control information wherein one of the recording speed informations is a basic recoding speed information.

**ABSTRACT**

A method of recording disc control information in a recordable optical disc including at least one recording layer is provided. Writing speed information and per writing speed write strategy are included in disc control information. The specified disc control information can be uniformly applied to efficiently cope with the record/playback of the optical disc. In configuring disc control information within a management area of an optical disc, the method includes recording a plurality of recording speed informations and a plurality of write strategies respectively associated with corresponding recording speeds within the disc control information wherein one of the recording speed informations is a basic recoding speed information.

# Recording Medium,

# Method of Configuring Control Information Thereof,

# Recording and/or Reproducing Method Using the Same,

# and Apparatus Thereof

## Technical Field

The present invention relates to a method of recording control information on a recording medium, such as recordable optical disc having at least one recording layer, and more particularly, to a method in which record velocity information and write strategy parameters are included in the disc control information. Also, this invention relates to a method of recording or reproducing data on or from the recording medium using the writing speed information

## Background Art

A high density optical recording medium, known as HD-DVD, is widely used to record and store high-definition video data, large amount program data, and high-quality audio data and so one. The Blu-ray disc represents next-generation HD-DVD technology.

Technological specifications are now being established for the global standardization of the Blu-ray disc, including standards are for the write-once Blu-ray disc (BD-WO). Meanwhile, a rewritable Blu-ray disc, known as the 1x speed BD-RE and now being discussed, should be compatible with BD-RE discs expected to have higher writing speeds, i.e., the 2x-speed BD-RE and beyond. BD-WO specifications for high recording velocity are also in progress. Efficient solutions for coping with the high writing speed of a high-density optical disc are urgently needed, and the specifications established should ensure mutual compatibility.

**Disclosure of Invention**

According to one aspect of the present invention, there is provided a method of recording control information of recording medium, comprising a step of: generating the control information including a plurality of recording speed information and at least one write strategy associated with a specific recording speed, wherein the plurality of recording speed information comprises first information used to indicate a recording speed as a maximum recording speed, second information used to indicate a recording speed as a minimum recording speed, third information used to indicate a recording speed as a predetermined recording speed different from the maximum and minimum recording speed, and fourth information used to indicate a recording speed as a basic recording speed, at least one basic recording speed indicated by the fourth information being supported by the recording medium; and recording the control information on the recording medium.

According to another aspect of the present invention, there is provided a method, comprising steps of: generating recording speed information, wherein the recording speed information comprises first information used to indicate a recording speed as a maximum recording speed, second information used to indicate a recording speed as a minimum recording speed, third information used to indicate a recording speed as a predetermined recording speed different from the maximum and minimum recording speed, and fourth information used to indicate a recording speed as a basic recording speed, at least one basic recording speed indicated by the fourth information being supported by a

recording medium; and recording the recording speed information on a specific area of the recording medium.

According to still another aspect of the present invention, there is provided a method of recording/reproducing data on/from a recording medium, comprising steps of: reading recording speed information, wherein the recording speed information comprises first information used to indicate a recording speed as a maximum recording speed, second information used to indicate a recording speed as a minimum recording speed, third information used to indicate a recording speed as a predetermined recording speed different from the maximum and minimum recording speed, and fourth information used to indicate a recording speed as a basic recording speed, at least one basic recording speed indicated by the fourth information being supported by the recording medium; and recording data on a main data area of the recording medium based on the recording speed information.

According to yet another aspect of the present invention, there is provided a recording medium having recording speed information, characterized in that the recording speed information comprises first information used to indicate a recording speed as a maximum recording speed, second information used to indicate a recording speed as a minimum recording speed, third information used to indicate a recording speed as a predetermined recording speed different from the maximum and minimum recording speed, and fourth information used to indicate a recording speed as a basic recording speed, at least one basic recording speed indicated by the fourth information being supported by the recording medium.

According to a further aspect of the present invention, there is provided an apparatus for recording data on a recording medium, comprising: a pickup unit configured to record data on the recording medium; and a controller operatively coupled to the pickup unit, configured to identify recording speed information, the recording speed information including first information used to indicate a recording speed as a maximum recording speed, second information used to indicate a recording speed as a minimum recording speed, third information used to indicate a recording speed as a predetermined recording speed different from the

maximum and minimum recording speed, and fourth information used to indicate a recording speed as a basic recording speed, at least one basic recording speed indicate by the fourth information being supported by the recording medium; and the controller configured to control the pickup unit to record the data according to the identified recording speed information.

According to yet a further aspect of the present invention, there is provided an apparatus, comprising: a pickup configured to read or record data from or on a recording medium; and a controller, operatively coupled to the pickup, configured to identify recording speed information, the recording speed information including first information used to indicate a recording speed as a maximum recording speed, second information used to indicate a recording speed as a minimum recording speed, third information used to indicate a recording speed as a predetermined recording speed different from the maximum and minimum recording speed, and fourth information used to indicate a recording speed as a basic recording speed, at least one basic recording speed indicated by the fourth information being supported by the recording medium; and the controller configured to control the pickup to record the recording speed information on a specific area of the recording medium.

Some embodiments of the present invention may provide an optical disc control information recording method that substantially obviates one or more problems due to limitations and disadvantages of the related art.

Some embodiments of the present invention may provide a method of recording disc control information as specified information corresponding to a plurality of recording velocities, by which recording velocity information is included in the disc control information so that the recording and reproducing of an optical disc can be performed based on prerecorded disc information.

Some embodiments of the present invention may provide a data structure for configuring disc control information.

Some embodiments of the present invention may provide a method of recording, in a specific area of an optical disc, disc control information corresponding to a

plurality of recording velocities, by which information for specific recording velocities per recording layer is recorded in a specific sequence, to provide mutual compatibility between like-based discs.

Some embodiments of the present invention may provide a recording and reproducing method and apparatus thereof, by which user data can be recorded on and reproduced from an optical disc using prerecorded disc control information.

Additional features of some embodiments of the invention will be set forth in part in the description which follows and in part will become apparent to those having ordinary skill in the art upon examination of the following or may be learned from practice of the invention.

A data structure according to an aspect of the present invention includes a recording speed information including a first information indicating a maximum recording speed, a second information indicating a minimum recording speed, a third information indicating a predetermined recording speed different from the maximum or minimum recording speed, and a fourth information indicating a basic recording speed.

In another aspect of the present invention, in configuring disc control information within a management area of an optical disc, a method of recording the disc control information of the optical disc includes the step of recording a plurality of recording speed information and a plurality of write strategies respectively associated with corresponding recording speeds within the disc control information wherein one of the recording speed information is a basic recording speed information.

In another aspect of the present invention, a method of recording data on an optical recording medium includes the step of recording a speed information on a specific area of the optical recording medium, wherein the speed information

comprises a first information indicating a maximum recording speed, a second information indicating a minimum recording speed, a third information indicating a predetermined recording speed different from the maximum or minimum recording speed, and a fourth information indicating a basic recording speed.

In another aspect of the present invention, a method of recording/reproducing data on/from an optical recording medium includes the steps of reading a speed information from a specific area of the optical recording medium wherein the speed information comprises a first information indicating a maximum recording speed, a second information indicating a minimum recording speed, a third information indicating a predetermined recording speed different from the maximum or minimum recording speed, and a fourth information indicating a basic recording speed and recording data on a main data area of the optical recording medium based on the read speed information.

In another aspect of the present invention, a recording medium having a recording speed information is characterized in that the recording speed information comprises a first information indicating a maximum recording speed, a second information indicating a minimum recording speed, a third information indicating a predetermined recording speed different from the

maximum or minimum recording speed, and a fourth information indicating a basic recording speed.

In another aspect of the present invention, an optical disc includes at least one recording layer provided with a recordable area and a recording-disabled or prerecorded area, wherein disc control information is separately recorded within the prerecorded area per the recording layer and wherein a plurality of recording speed information and a plurality of write strategies associated with corresponding recording speeds are recorded within the disc control information, and wherein one of the recording speed information is a basic recoding speed information.

In another aspect of the present invention, an optical disc recording method includes the steps of if an optical disc having at least one recording layer is loaded, reading disc control information written within a management area of the optical disc and reading to store a plurality of recording speed information and write strategies respectively fitting corresponding recording speeds recorded within a predetermined area of the disc control information each, deciding the recording speed to be applied to each section of the optical disc by referring to a plurality of the stored speed

information and the write strategies, and performing a recording at the decided recording speed.

In another aspect of the present invention, an optical disc record playback apparatus includes a control unit delivering a recording command and a record playback unit receiving the recording command, the record playback unit performing a recording in a manner of reading disc control information recorded within a management area of an optical disc, deciding a recording speed for performing the recording command on a specific area by reading a maximum recording speed information, a minimum recording speed information, a basic recording speed information, a predetermined speed information different from the maximum or minimum recording speed information at least, and a write strategy fitting the corresponding recording speed, and performing the recording using the write strategy fitting the decided recording speed.

It is to be understood that both the foregoing general description and the following detailed description of the present invention are exemplary and explanatory and are intended to provide further explanation of the invention as claimed.

**Brief Description of Drawings**

The accompanying drawings, which are included to provide a further understanding of the invention and are incorporated in and constitute a part of this application, illustrate embodiment(s) of the invention and together with the description serve to explain the principle of the invention. In the drawings:

FIG. 1 is a diagram of a single-layer disc applicable to the present invention;

FIG. 2 is a diagram of a dual-layer disc applicable to the present invention;

FIG. 3 is a diagram of a management area where disc control information of the present invention is recorded, in which a format of recording the disc information in a corresponding area is schematically shown;

FIGS. 4A to 4C are diagrams of disc information recorded according to a first embodiment of the present invention;

FIGS. 5A and 5B are diagrams of a disc recording method according to the first embodiment of the present invention;

FIGS. 6A to 6C are diagrams of recording disc information according to a second embodiment of the present invention;

FIGS. 7A to 7D are diagrams of recording disc information

according to a third embodiment of the present invention; and

FIG. 8 is a block diagram of an optical disc recording and reproducing apparatus using disc control information according to the present invention.

**Best Mode for Carrying Out the Invention**

Reference will now be made in detail to the preferred embodiments of the present invention, examples of which are illustrated in the accompanying drawings. Wherever possible, the same reference numbers will be used throughout the drawings to refer to the same or like parts.

A Blu-ray disc is taken as an example of an optical disc according to the present invention. Yet, the concept of the present invention, characterized in an optical disc having its disc control information recorded thereon, is applicable to DVD-RAM, DVD-RW, DVD+RW, DVD-R, DVD+R, and similar such discs. Although the terminology used herein is well known for the most part, some terms have been chosen by the applicant, such that the present invention should be understood with the intended meanings of the terminology as used by the applicant. For example, the "disc control information" of a disc is recorded in a specified area, i.e., a recordable area of the disc or a

prerecorded area (sometimes known as an embossed areamanufacturer, in which manufacturer data is recorded and where no further recording is possible), and includes information necessary for the playback of a recorded disc. Disc control information is called "disc information" or "DI" in relation to Blu-ray disc technology but is typically referred to as "physical format information" for DVD-RAM, DVD-RW, DVD+RW, DVD-R, and DVD+R discs. Hence, it should be apparent that the technical background of the present invention is equally applicable to physical format information. Moreover, the disc information according to the present invention is recorded as an unspecified unit of information, which may be counted, for example, as a first or second information.

FIGS. 1 and 2 illustrate the structure of optical discs according to the present invention, in which any recordable optical disc may be applicable to the present invention. The recordable disc may be, for example, a rewritable optical disc or a write-once optical disc.

Referring to FIG. 1, illustrating an optical disc having one recording layer, a lead-in area is provided as a management area on an inner circumference area of an optical disc, whereas

a lead-out area is provided as a management area on an outer circumference area of the optical disc. In the inner circumference area, a pre-recorded area and a rewritable (or write-once) area are provided separately. In BD-RE and BD-WO technology, the pre-recorded area is called the PIC area, where permanent information and control data is recorded, and disc information is recorded in the PIC area. A data area is made up of a user data area where user data is recorded and inner and outer spare areas ISA and OSA, which are used in the replacement of the data of a defective area. In the case of a BD-WO disc, a temporary defect management area (TDMA) is provided for recording information of a defect and for general management. The TDMA is unnecessary in the case of BD-RE discs, which have a corresponding area designated as reserved.

The present invention intends to provide a method of recording disc information (DI) as disc control information required for recording and/or reproducing of a disc in a pre-recorded or recordable are. It is apparent that a recording method in the pre-record area is differently applied to each kind of disc. In the case of BD-RE and BD-WO discs, the pre-recorded area is the PIC area recorded using a bi-phased high-frequency modulated signal reproduced according to a specific playback

method, to acquire the disc information.

FIG. 2 illustrates an optical disc having dual recording layers, in which an inner circumference area of the disc has a lead-in of a first recording layer (Layer 0) corresponding to a lead-out of a second recording layer (Layer 1). In this case, one PIC area is provided in each of the lead-in and lead-out areas, and the same disc information is recorded in each PIC area.

FIG. 3 illustrates a PIC area formatted according to the present invention. In configuring the disc information of the PIC area of a BD-RE or BD-WO disc, the minimum recording unit is one cluster, 544 clusters constitute one fragment as one upper record unit, and five fragments make up the PIC area. Disc information is recorded in a front head cluster of a first fragment IF0. The disc information is plurally recorded per recording layer and recording velocity permitted by the corresponding optical disc. One disc information includes 112 bytes, sometimes referred to as a DI frame. To cope with a loss of disc information, the same contents of the disc information are repeatedly recorded in each front head cluster of the remainder of the fragments.

Information representing the corresponding recording layer, information representing recording velocity, and write strategy

information corresponding to the recording velocity are included in each disc information. Such information is utilized in recording and reproducing the optical disc, to provide optimal recording power per recording layer and per recording velocity.

The disc information of the present invention is characterized in providing specific recording velocity information supported by the disc and associated write strategy information, and more specifically, in providing specific recording velocity supported for each recording layer and associated write strategy information via a specified method for discs having a plurality of recording layers.

The specific configuration of the disc information is for a Blu-ray disc, which may differ from the configuration of a DVD-based disc. Specifically, the recording DI volume for a Blu-ray disc is 112 bytes or equivalent. By formulating the disc information of the same recording layer as one information, i.e., without repeating any common information, the write strategy configuration may differ per recording velocity.

In addition to a method of recording specific parameters of the write strategy, a medium property of an optical disc is generally modified by applying a laser beam to a recording

layer thereof via a pickup to perform recording. To do so, the laser beam's signal strength (recording power) and duration should be determined. Such information associated with recording is generally referred to as write strategy (WS) parameters for achieving a specific "write strategy."

FIGS. 4A-4C and 5A & 5B illustrate a first embodiment of the present invention of recording disc control information, in which various recording velocities to cope with high speed are grouped into one recording velocity group to be recorded.

The first embodiment of the present invention relates to a recording method of disc information coping with high speed, a method of recording data on an optical disc, and the like, and more particularly, to an advantageous method in coping with a constant angular velocity (CAV) system applicable to a high-speed disc. The present invention is not limited, however, to a CAV system.

In the CAV system, a disc is rotated at a constant speed such that the disc's inner and outer circumferences each have a rotational velocity corresponding to the length of the applied radius. For a Blu-ray disc, the velocity of the outer circumference is about 2.4 times greater than that of the inner circumference. Accordingly, if, for example, the recording on

the inner circumference using a CAV system is performed at 1x-speed or 4x-speed, the outer circumference recording has to be performed at about 2.4x-speed or 9.6x-speed, respectively, and conversely, a 6x-speed recording on the outer circumference means that the inner circumference recording has to be performed at about 2.5x-speed. In other words, adoption of the CAV system requires a velocity differential between the disc's inner and outer circumferences, so that an optimal recording velocity and write strategy must be selected for recording according to the applicable disc location. Moreover, such information should be provided as specified disc information to utilize the optimal recording velocity and write strategy (WS) in a corresponding system.

FIG. 4A shows one embodiment of recording disc information by an optical disc control according to the present invention, in which a disc information structure is schematically illustrated. Referring to FIG. 4A, each disc information sequence is determined by a sequence number and is recorded using one byte. For instance, the information is recorded in a fifth byte (i.e., the "DI frame sequence number in DI block," which can be represented as 00h, 01h, 02h, 03h, 04h, 05h, 06h, or 07h) of the disc information, where a fifth byte of 00h or 07h

indicates a first or eighth disc information, respectively. In another meaning, the byte (e.g., $5^{th}$ byte) deciding the sequence of the disc information can be defined to mean not only the sequence but also an applicable recording velocity in a specific recording layer. For instance, '00h' means 1x speed disc information of a first recording layer, '01h' means 1x speed disc information of a second recording layer, and the like.

Moreover, in a specific area within the disc information, recording velocity information designated by the corresponding disc information and write strategy (WS) coping with the corresponding recording velocity are written in a previously promised specific location. For instance, the recording velocity information of the corresponding disc information is written in $N^{th}$~$(N+4)^{th}$ bytes and the write strategy (WS) coping with the corresponding recording velocity is written in $M^{th}$~$111^{th}$ bytes.

Specifically, the present invention is characterized in providing disc information coping with high recording velocity, the recording velocity information and write strategy (WS) are written for each of a plurality of recording velocity information, namely, an optimal recording velocity Vnom, a

maximum recording velocity Vmax, a minimum recording velocity Vmin, and an intermediate recording velocity Vint. At optimal recording velocity, the basic recording speed information is written, and a basic recording speed generally starts at 2x-speed in a high-speed disc. As an applicable recording speed increases, so does the basic recording speed. At maximum recording velocity, information associated with maximum recording velocity applicable by a corresponding disc is written. At minimum recording velocity, information associated with recording speed found by dividing the maximum recording velocity applicable by the corresponding disc by '2.4' is written. At intermediate recording velocity, information associated with recording speed found by multiplying the minimum recording velocity by '1.7' is written. A relation of determining recording velocity values of the maximum, minimum, and intermediate recording velocities is decided for convenience of explanation by considering a radius ratio between inner and outer circumferences of BD applicable to the present invention. It is apparent that such a relation can be variably applied to other kinds of discs and that the recording velocity values can be set to different values according to disc characteristics despite the same BD.

Relating to the optimal recording velocity (2x speed), the same information is preferably recorded in each disc information. Preferably, the maximum, minimum, and intermediate recording velocities are differently determined according to the maximum recording velocity value applicable by the corresponding disc information.

Moreover, it is able to set up the intermediate recording velocities plurally. The present invention is characterized in having at least one intermediate recording velocity. Hence, at least four recording velocity information are included in one disc information. The more the recording velocity information exist, the more advantageous it becomes for the system operation. Hence, by utilizing a recordable area within disc information to the maximum, many intermediate recording velocity information are preferably provided thereto.

FIG. 4B shows a specific recording method for disc information having a plurality of per recording velocity information according to the present invention like FIG. 4A, in which disc information is written while maintaining compatibility with 1x-speed BD-RE disc information under discussion and in which there exists one intermediate recording velocity information for example.

Three kinds of recording velocities such as optimal recording velocity (Vnom), maximum recording velocity (Vmax), and minimum recording velocity (Vmin) are written in $32^{nd}$~$35^{th}$ bytes within disc information according to a predetermined definition. Write power information as write strategy (WS) for each of the three kinds of recording velocities is recorded in $48^{th}$~$71^{st}$ bytes. A start time of a write pulse as another write strategy (WS) coping with each of the three kinds of recording velocities is recorded in $76^{th}$~$84^{th}$ bytes. A start time of an erase pulse as another write strategy (WS) coping with each of the three kinds of recording velocities is recorded in $89^{th}$~$97^{th}$ bytes.

In addition to the basic three kinds of recording velocities Vnom, Vmax, and Vmin, the present invention further records at least one information associated with the intermediate recording velocity Vint, which is recorded using a reserved area within disc information. For instance, the intermediate recording velocity is recorded in $19^{th}$ byte according to a predetermined definition, write power information is recorded as write strategy (WS) coping with the intermediate recording velocity in total 8-bytes of $20^{th}$~$23^{rd}$ bytes and $44^{th}$~$47^{th}$ bytes, a start time of a write pulse as another write strategy (WS)

coping with the intermediate recording velocity is recorded in $99^{th}$~$101^{st}$ bytes, and a start time of an erase pulse as another write strategy (WS) coping with the intermediate recording velocity is recorded in $102^{nd}$~$104^{th}$ bytes.

As explained in the foregoing description, if a plurality of intermediate recording velocities are intended to be recorded, information associated with another intermediate recording velocity can be recorded in a reserved area within disc information as well.

FIG. 4C schematically shows disc information recorded in case of recording the disc information of FIG. 4A, and more particularly, in case of a dual layer having two recording layers. The same principle can be applied to a single layer having one recording layer.

For instance, when an optical disc needs three different recording velocity information per recording layer, six disc information corresponding to each recording velocity are required. Each disc information allocates to record a sequence number, recording velocity information corresponding to the sequence number, and a write strategy (WS) in a predetermined area.

For instance, if recording velocities to be represented are 1x-

speed, 2x-speed, and 6x-speed, first, second, and third disc information mean the disc information for the first recording layer. The $1^{st}$ disc information is 1x-speed disc information of the $1^{st}$ recording layer and has a sequence number of '00h'. The corresponding recording velocity and write strategy are recorded in a previously promised location, whereby the recording velocity information is recorded in $N^{th}$~$(N+4)^{th}$ bytes and the write strategy is recorded in $M^{th}$~$111^{th}$ bytes.

The $2^{nd}$ disc information is 2x speed disc information of the $1^{st}$ recording layer and has a sequence number of '01h'. The corresponding recording velocity and write strategy are recorded in a previously promised location like the $1^{st}$ disc information. The third disc information is 6x speed disc information of the $1^{st}$ recording layer and has a sequence number of '02h'. The corresponding recording velocity and write strategy are recorded in a previously promised location like the $1^{st}$ or $2^{nd}$ disc information.

Meanwhile, $4^{th}$ to $6^{th}$ disc information mean disc information for $2^{nd}$ recording layer. The $4^{th}$ disc information is 1x speed disc information of the $2^{nd}$ recording layer and has a sequence number of '03h'. The $5^{th}$ disc information is 2x speed disc information of the $2^{nd}$ recording layer and has a sequence

number of '04h'. The 6th disc information is 6x speed disc information of the 2nd recording layer and has a sequence number of '05h'. The corresponding recording velocity and write strategy of each of the 4th to 6th disc information are recorded in the same location.

The first embodiment of the present invention shown in FIGS. 4A to 4C is described by taking an example of recording a plurality of the recording velocity information and per recording velocity write strategies (WS) within one disc information. If necessary, one write strategy (WS), associated with specific recording velocity information, may be recorded in one disc information, and the remainder recorded in another disc information.

For instance, in case that four kinds of recording velocity information are required, the disc information are needed four times more than those of the above-described embodiment of the present invention. Yet, the PIC area, as shown in FIG. 3, is an area sufficient for recording a multitude of 112-bytes disc information therein so that sufficiently large amount of disc information can be recorded therein if necessary. Hence, if one write strategy (WS) is recorded within the disc information, it is advantageous in allocating more areas for recording

intermediate recording velocity therein.

On the contrary, it is possible to record information commonly recorded in each disc information as common information once and to change to record the per recording velocity write strategies only.

FIG. 5A and FIG. 5B are diagrams of a recording method of performing a recording on an optical disc according to the first embodiment of the present invention. FIG. 5A relates to a case of using one intermediate recording velocity, and FIG. 5B shows an example of using at least two intermediate recording velocities.

Namely, once an optical disc is loaded in an optical record/playback unit, write strategies respectively associated with maximum recording velocity (Vmax), minimum recording velocity (Vmin), and intermediate recording velocity (Vint) are read out as disc control information within the optical disc.

A recordable area between an inner circumference and an outer circumference is virtually divided into three sections. The maximum recording velocity (Vmax), minimum recording velocity (Vmin), and intermediate recording velocity (Vint) are applied to an outer circumference area, an intermediate area, and an inner circumference area, respectively, to perform a recording

thereon. This means that the recording is performed by applying an appropriate recording velocity and write strategy (WS) associated with the corresponding recording velocity to a specific area, where the recording will be performed, to adjust write power, write pulse timing, and the like.

For instance, if a maximum recording velocity applicable by a disc is 6x-speed, disc information associated with 6x speed is read out. In case that the maximum recording velocity (Vmax) is 6x-speed, 2.5x-speed for a minimum recording velocity (Vmax/2.4) and 4.25x speed for an intermediate recording velocity (1.7Vmin) are recorded within the disc information as well as write strategies for the respective recording velocities. A record/playback unit previously confirms the recording velocity and write strategy (WS), which will be applied to a specific area where a recording will be performed, thereby enabling to quickly cope with the write strategy (WS) in performing the recording on the corresponding area and to reduce probability of error occurrence using the optimal recording velocity.

FIG. 5B schematically shows a method of performing a recording on an optical disc in case that a plurality of intermediate recording velocities are recorded within disc information. A

recordable area of an optical disc is virtually divided into a plurality of sections as many as a number of recording velocities within disc information except Vnom. Maximum recording velocity (Vmax) and minimum recording velocity (Vmin) are applied to an outer circumference area and an inner circumference area, respectively, to perform a recording thereon. An intermediate area of the disc is divided into areas as many as the number of the set intermediate recording velocities to apply the intermediate recording velocities Vint-1~Vint-n thereto, respectively. Thus, the corresponding recording is performed on the divided areas. Hence, an optimal recording velocity to the corresponding section is determined, whereby the recording is enabled using the determined write strategy (WS) per the corresponding decided recording velocity.

FIGs. 6A to 6C illustrate a second embodiment of the present invention of recording disc control information, in which recording velocity information indicating a corresponding recording velocity and a write strategy corresponding to the recording velocity are recorded within each disc information to cope with high speed.

FIG. 6A shows one example of recording disc information of an optical disc according to a third embodiment of the present

invention, in which a disc information structure is schematically illustrated.

Referring to FIG. 6A, a sequence of each disc information is decided by a sequence number, and the corresponding sequence is written by 1-byte. For instance, the corresponding information is recorded in $5^{th}$ byte within the disc information, which is named 'DI frame sequence number in DI block' field and is briefly represented by '00h, 01h, 02h,…'. Namely, the information of the $5^{th}$ byte is defined in a following manner. First of all, if the information of the $5^{th}$ byte is '00h', '00h' means $1^{st}$ disc information. '07h' means $8^{th}$ disc information.

In a specific area within the disc information, each recording velocity information allowed by a disc is represented by a specific bit to be recorded in a previously promised specific location within the disc information. For instance, if a corresponding disc needs four different recording velocity information per recording layer, 4-bits are allocated to one recording velocity each, recording velocity information for the first recording layer (Layer 0) is recorded in $N^{th}$ and $(N+1)^{th}$ bytes within the disc information, and recording velocity information for $2^{nd}$ recording layer Layer1 is recorded in $M^{th}$

and $(M+1)^{th}$ bytes within the disc information. If the disc has a single layer, the $M^{th}$ and $(M+1)^{th}$ bytes are set to 'zero' value. If at least four kinds of different recording velocity information are required, bytes such as $N^{th}$ byte, $(N+1)^{th}$ byte, $(N+2)^{th}$ byte, and the like are additionally allocated to use. Therefore, the recording velocity corresponding to its sequence number, as shown in FIG. 6A, is recorded in a previously promised specific location, whereby it is facilitated to confirm the recording velocity information possessed by the corresponding disc information. Moreover, the remaining bytes, e.g., $44^{th}$~$111^{th}$ bytes, are utilized to record write power, write parameters, and the like in detail.

FIG. 6B schematically shows disc information recorded in case of representing the recording velocity information like FIG. 6A, and more particularly, in case of a single layer. If an optical disc requires four kinds of different recording velocity information, four disc information corresponding to each recording velocity are needed. Each of the disc information is recorded by allocating 4-bits to a sequence number and 4-bits to recording velocity corresponding to the sequence number. For instance, if recording velocities to be represented are 1x speed, 2x speed, 4x speed, and 8x speed, respectively, $1^{st}$ disc

information has a sequence number corresponding to '00h' to represent a corresponding recording velocity by '0001b' indicating 1x speed, $2^{nd}$ disc information has a sequence number corresponding to '01h' to represent a corresponding recording velocity by '0010b' indicating 2x speed, $3^{rd}$ disc information has a sequence number corresponding to '02h' to represent a corresponding recording velocity by '0100b' indicating 4x speed, and $4^{th}$ disc information has a sequence number corresponding to '03h' to represent a corresponding recording velocity by '1000b' indicating 8x speed. In doing so, each recording velocity is represented by binary information. Hence, if 4-bits each is allocated, a maximum applicable recording velocity (represented by '1111b') will be 15x speed. If the maximum applicable recording velocity exceeds 16x speed, at least 5-bits each should be allocated.

Since the single layer is shown in FIG. 6B, $M^{th}$ and $(M+1)^{th}$ bytes representing recording velocity information for $2^{nd}$ recording layer Layer1 are set to 'zero' to be handled as unused information.

FIG. 6C schematically shows disc information recorded in case of representing the recording velocity information like FIG. 6A, and more particularly, in case of a dual layer. If an optical

disc requires four kinds of different recording velocity information, total eight disc information corresponding to each recording velocity are needed. Each of the disc information is recorded by allocating 4-bits to a sequence number and 4-bits to recording velocity corresponding to the sequence number. For instance, if recording velocities to be represented are 1x speed, 2x speed, 4x speed, and 8x speed, respectively, $1^{st}$ disc information has a sequence number corresponding to '00h' to represent a corresponding recording velocity by '0001b' indicating 1x speed, $2^{nd}$ disc information has a sequence number corresponding to '01h' to represent a corresponding recording velocity by '0010b' indicating 2x speed, $3^{rd}$ disc information has a sequence number corresponding to '02h' to represent a corresponding recording velocity by '0100b' indicating 4x speed, and $4^{th}$ disc information has a sequence number corresponding to '03h' to represent a corresponding recording velocity by '1000b' indicating 8x speed. The $1^{st}$ to $4^{th}$ disc information are information for the $1^{st}$ recording layer (Layer0) and are recorded in $N^{th}$ and $(N+1)^{th}$ bytes of disc information, and 4-bits represent each recording velocity by binary information. Likewise, recording velocity information can be represented for $2^{nd}$ recording layer in the same manner, which is recorded in $M^{th}$

and $(M+1)^{th}$ bytes. Namely, $5^{th}$ disc information has a sequence number corresponding to '04h' to represent a corresponding recording velocity by '0001b' indicating 1x speed, $6^{th}$ disc information has a sequence number corresponding to '05h' to represent a corresponding recording velocity by '0010b' indicating 2x speed, $7^{th}$ disc information has a sequence number corresponding to '06h' to represent a corresponding recording velocity by '0100b' indicating 4x speed, and $8^{th}$ disc information has a sequence number corresponding to '07h' to represent a corresponding recording velocity by '1000b' indicating 8x speed.

In the second embodiment, write strategy for write power, write parameters, and the like fitting each recording velocity is recorded in a rest area within the disc information as well as the recording velocity information. Hence, within one disc information, a sequence number of the corresponding disc information, recording velocity information represented by the corresponding disc information, write strategy (WS) coping with the corresponding recording velocity, and the like are recorded respectively.

Besides, in representing the recording velocity information like the second embodiment, $5^{th}$ byte information is previously

defined as a specific recording velocity so that recording velocity information is recorded in $N^{th}$, $(N+1)^{th}$, $M^{th}$, and $(M+1)^{th}$ bytes to confirm it.

For instance, it is previously defined that '00h' of $5^{th}$ byte information means '1x speed disc information of $1^{st}$ recording layer' and that '07h' of $5^{th}$ byte information means '8x speed disc information of $2^{nd}$ recording layer'. Four bits are allocated to each of the $N^{th}$, $(N+1)^{th}$, $M^{th}$, and $(M+1)^{th}$ bytes so that an accurate recording velocity value is recorded as '0001b' (1x speed) or '0100b' (8x speed). Thus, it is reconfirmed that the corresponding disc information is 1x- or 8x-speed.

FIGS. 7A to 7D are diagrams of recording disc information according to a third embodiment of the present invention, in which applicable recording speed information is recorded to cope with high speed.

In order to acquire disc information associated with a specific writing speed of an intended specific recording layer from a plurality of existing disc information, the entire disc information should be read to take a lot of time. For instance, if there are four recording layers and eight writing speed applicable per recording layer, total thirty-two disc

information are needed. A record/playback unit should search the entire disc information amounting to thirty-two whenever a value of the disc information for the specific recording layer and writing speed is needed. Hence, the present invention is characterized in recording 'disc-applicable writing speed information' and 'recording layer information existing in a disc' within disc information to enable a disc information search by a specified method using the recorded information.

Namely, the 'disc-applicable writing speed information' and 'recording layer information existing in a disc' are identically recorded within each disc information in common and a sequence of a plurality of disc information is decided using these information, thereby facilitating to acquire disc information related to the specific recording layer and writing speed to be searched.

Moreover, one write strategy (WS) is recorded within each disc information and identification information for identifying a kind or type of the corresponding write strategy (WS) is separately recorded, whereby a record playback apparatus (FIG. 8) is facilitated to use the write strategy (WS). Moreover, by selecting to record one write strategy (WS) for a specific

writing speed and a specific recording layer in disc information, a disc manufacturer can be provided with convenience.

A method of recording disc information according to a third embodiment of the present invention is explained by referring to FIGs. 7A to 7D as follows.

FIG. 7A shows a schematic structure of disc information for explaining a method of recording disc information according to a third embodiment of the present invention.

Referring to FIG. 7A, a sequence for disc information each is decided by a sequence number and is recorded by 1-byte. For instance, the information is recorded in $5^{th}$ byte within disc information, is named 'DI frame sequence number in DI block' field, and is briefly represented by '00h, 01h, 02h, …'. Namely, if the information of the $5^{th}$ byte is '00h', it means $1^{st}$ disc information. If the information of the $5^{th}$ byte is '07h', it means $8^{th}$ disc information. A meaning of the sequence of the $5^{th}$ byte will be decided by $N^{th}$ and $L^{th}$ bytes that will be explained later.

Writing speed information applicable by a corresponding disc is recorded in a specific area ($N^{th}$ byte) within disc information which is named 'Writing speed flag' field. For instance,

whether a specific writing speed of eight kinds of writing speeds is applicable by the corresponding disc is represented by 1-bit each in the same area having 1-byte allocated thereto. Namely, it can be defined that the corresponding writing speed is not applicable (supported) if a bit value is '0b' in entire bits or that the corresponding writing speed is applicable (supported) if the bit value is '1b'. Hence, each of the bits b0~b7 within 1-byte becomes flag information indicating presence or non-presence of applicability of a specific writing speed.

For instance, if 1x speed is applicable by a corresponding disc only, '0000 0001' is written in $N^{th}$ byte. If all of the eight kinds of writing speeds are applicable, '1111 1111' is written in the $N^{th}$ byte.

In the above explanation, 1x and 2x speeds utilized by every disc almost are previously decided to be adopted. Yet, writing speeds decided by specification can be used as the rest writing speeds from $3^{rd}$ writing speed. For instance, it is possible to set $3^{rd}$, $4^{th}$, $5^{th}$, $6^{th}$, $7^{th}$, and $8^{th}$ writing speeds ($3^{rd}$ X, $4^{th}$ X, $5^{th}$ X, $6^{th}$ X, $7^{th}$ X, $8^{th}$ X) to 5x, 6x, 8x, 12x, 14x, and 16x speeds, respectively.

Hence, if the corresponding disc allows the writing speeds up

to the 4th writing speed, it will be written as 'Writing speed flag = 0000 1111b'. Yet, if the corresponding disc allows not the 3rd writing speed but the 4th writing speed, 'Writing speed flag = 0000 1011b' is not allowed. Namely, in the 'Writing speed flag' field, if upper bits are set to '1b', the corresponding lower bits should be set to '1b'. Hence, it means that lower bits are not set to '0b' despite '1b' of upper bits.

Meanwhile, recording layer information indicating the number of recording layer(s) existing within the corresponding disc is recorded in another specific area ($L^{th}$ byte) within the disc information, which is named 'Number of Recording Layer' field. For instance, a value meaning the number of the recording layer(s) can be represented by a binary number in the same area having 1-byte allocated thereto. In case that the recording layer is the single layer in FIG. 1, '0000 0001' is written in the $L^{th}$ byte. In case that the recording layer is the dual layer in FIG. 2, '0000 0010' is written in the $L^{th}$ byte. In case that four recording layers exist, '0000 0100' is written in the $L^{th}$ byte.

Since limitation is put on the number of the currently considered recording layer(s), which is currently two recording layers, 4-bits within the $L^{th}$ byte are enough to represent

total fifteen recording layers (in case of '1111'). In such a case, it is apparent that other valid information can be written in the rest area (4-bits) of the $L^{th}$ byte.

Moreover, identification information for identifying a kind of write strategy (WS) recorded in $P^{th}$~$111^{th}$ bytes is written in another specific area ($M^{th}$ byte) within the disc information, which is named 'Write Strategy (WS) Type' field.

Namely, in the disc information of the present invention, one write strategy (WS) is recorded for a specific writing speed and a specific recording layer and the write strategy is optionally selected from various kinds of specified write strategy types by a disc manufacturer. Hence, if the corresponding disc information is a first type write strategy WS-1, '0000 0001' is written in the $M^{th}$ byte. If the corresponding disc information is a second type write strategy WS-2, '0000 0010' is written in the $M^{th}$ byte. And, substantial write strategy (WS) is recorded in $P^{th}$~$111^{th}$ bytes. Yet, the substantial write strategy (WS) will be recoded as a value interoperating with the decided write strategy (WS) type in the $M^{th}$ byte. The write strategy (WS) type via the $M^{th}$ byte is optionally recordable in every disc information. And, it is also possible to apply one specified write strategy (WS) type

in 1x speed disc information, which is expected to be supported by every record playback apparatus (FIG. 8), in a mandatory manner.

And, the write strategy (WS) can be recorded in various ways. As a disc becomes highly densified and has higher speed, a writing speed, i.e., disc RPM) as well as medium properties of recording layer is considerably affected. Hence, a more accurate system is requested. And, the various write strategies (WS) are explained as follows for example.

First of all, there is a system having a write pulse smaller by '1' than a recording mark size (n) formed on a recording layer medium, which may be called '(n-1) WS'. Secondly, there is a system having a write pulse having a size amounting to a half of the recording mark size (n), which may be called 'n/2 WS'. Besides, new write strategies (WS) keep being developed. Regarding the different kinds or types of write strategies (WS), when there exist the various write strategy (WS) types exist as parameters applied to the write strategies (WS) differ from each other, a disc manufacturer tests write power according to the write strategy (WS) recorded in the selected $M^{th}$ byte and then records a result of the test as write strategy (WS) in the Pth~$111^{th}$ bytes within the disc information.

From the above-recorded 'writing speed information' of the $N^{th}$ byte and the 'recording layer information' of the $L^{th}$ byte, the record playback apparatus (FIG. 8) recognizes how many disc information exist within the corresponding disc. Namely, the number of the existing disc information is found by multiplying an applicable writing speed number by the number of recording layers. As the present invention applies one write strategy (WS) for a specific writing speed and a specific recording layer, the type and number of the write strategy (WS) may not be taken into consideration in deciding the number of disc information.

The above-decided information about the number of total disc information can be recorded in a specific area (e.g., $4^{th}$ byte or the like) (not shown in the drawing) within the disc information as well.

Hence, it is able to program a plurality of the above-decided disc information such that the sequence (which is written in the $5^{th}$ byte as mentioned in the foregoing description) of the disc information is decided by the sequence numbers and such that each of the disc information designates the previously decided writing speed and recording layer by the sequence.

For example, by knowing that four writing speeds applicable by

a disc exist if the $N^{th}$ byte is '0000 1111' and that two recording layers exist within the disc if the $L^{th}$ byte is '0000 0010', total eight disc information are needed so that the sequence will be '00h~07h'. And, it is previously decided that disc information of '00h', '01h', '02h', '03h', '04h', '05h', '06h', and '07h' relate to '1x speed, $1^{st}$ recording layer', '2x speed, $2^{nd}$ recording layer', '2x speed, $1^{st}$ recording layer', '2x speed, $2^{nd}$ recording layer', '$3^{rd}$ writing speed, $1^{st}$ recording layer', '$3^{rd}$ writing speed, $2^{nd}$ recording layer', '$4^{th}$ writing speed, $1^{st}$ recording layer', and '$4^{th}$ writing speed, $2^{nd}$ recording layer', respectively.

In the above-explained example, the writing speed is preferentially taken into consideration. Yet, it is apparent that the recording layer can be preferentially taken into consideration.

Hence, in order to acquire the disc information for a specific target writing speed and a specific target recording layer, the record playback apparatus (FIG. 8) is facilitated to check which disc information is related to the specific target writing speed and recording layer from 'writing speed information' of the $N^{th}$ byte and 'recording layer information' of the $L^{th}$ byte commonly recorded within the respective disc

information instead of playing back to check the entire disc information.

FIG. 7B shows an example of extending the third embodiment of the present invention in FIG. 7A. In case that writing speeds applicable by a disc exceed eight kinds, the $N^{th}$ byte ('Writing speed flag' field) in FIG. 7A is extended to indicate presence or non-presence of applicability of $1^{st}$~$8^{th}$ writing speeds by a flag in $N1^{th}$ byte ('Writing speed flag1' field), and another byte is allocated to display presence or non-presence of applicability of $9^{th}$~$16^{th}$ writing speeds by a flag in $N2^{th}$ byte. Contents written in the rest bytes are equivalent to those of the third embodiment of the present invention in FIG. 7A, thereby being skipped in the following description.

FIG. 7C shows an example of recording disc information by the third embodiment of the present invention in FIG. 7A. It can be known that there are two (1X, 2X) applicable writing speeds from $N^{th}$ byte ('0000 0010b') commonly recorded in the entire disc information and that two recording layers exist within a disc from $L^{th}$ byte ('0000 0010b').

Hence, in the example of FIG. 7C, total four disc information (two recording layers * two writing speeds) exist and a sequence of the disc information becomes '00h' (1X,L0) → '01h'

(1X,L1) → '02h' (2X,L0) → '03h' (2X,L1). This is a specified content according to a predetermined sequence and, as mentioned in the foregoing description, can be rendered into a different sequence by a specification.

An intrinsic write strategy (WS) is recorded in other bytes within each disc information as well as in $N^{th}$ and $L^{th}$ bytes. Specifically, information of a type of write strategy (WS) written in $P^{th}$~$111^{th}$ bytes within the corresponding disc information is recorded in $M^{th}$ byte. Namely, information written in the $M^{th}$ byte and the $P^{th}$~$111^{th}$ bytes can differ in each disc information.

In the example in FIG. 7C, '00h' (1X,L0) and '01h' (1X,L1) relate to the application of a first type write strategy (WS-1) and '02h' (2X,L0) and '03h' (2X,L1) relate to the application of a second type write strategy (WS-2).

FIG. 7D shows another example of recording disc information according to the third embodiment of the present invention in FIG. 7A. It can be known that there are eight (1X, 2X, ..., 16X) applicable writing speeds from $N^{th}$ byte ('1111 1111b') commonly recorded in the entire disc information and that four recording layers exist within a disc from $L^{th}$ byte ('0000 0100b'). Hence, in the another example of FIG. 7D, total thirty-two disc

information (four recording layers * eight writing speeds) exist and a sequence of the disc information becomes '00h' (1X,L0) → '01h' (1X,L1) → '02h' (1X,L2) → '03h' (1X,L4) → '04h' (2X,L0) → … → '31h' (16X,L4).

An intrinsic write strategy (WS) is recorded in other bytes within each disc information as well as in $N^{th}$ and $L^{th}$ bytes. Specifically, information of a type of a write strategy (WS) written in $P^{th}$~$111^{th}$ bytes within the corresponding disc information is recorded in $M^{th}$ byte. Namely, information written in the $M^{th}$ byte and the $P^{th}$~$111^{th}$ bytes can differ in each disc information.

In the another example of FIG. 7D, if a record playback unit (FIG. 8) intends to search disc information related to 2x speed (2X,L0) of a first recording layer to perform a recording by applying a write strategy (WS) within the corresponding disc information, it can be known from the information in the $N^{th}$ and $L^{th}$ bytes commonly recorded in the entire disc information that total thirty-two disc information (four recording layers * eight writing speeds) exist in the corresponding disc according to the sequence of the disc information such as '00h' (1X,L0) → '01h' (1X,L1) → '02h' (1X,L2) → '03h' (1X,L4) → '04h' (2X,L0) → … → '31h' (16X,L4).

Hence, the record playback apparatus (FIG. 8) enables to recognize that the disc information related to the 2x speed (2X,L0) of the first recording layer to be searched is '04h' and that the corresponding disc information ('04h') is recorded as the first type write strategy (WS-1_ from the write strategy (WS) type identification information ('0000 0002b') recorded in the $M^{th}$ byte within the corresponding information ('04h'), thereby reading out parameter values of the first type write strategy (WS-1) via the $P^{th}$~$111^{th}$ bytes to utilize in the recording.

Likewise, if intending to search disc information related to 16x speed (16X,L3) of a fourth recording layer to perform recording by applying a write strategy (WS) within the corresponding disc information, the record playback unit (FIG. 8) recognizes that the corresponding disc information is '31h' via the same process and that the write strategy type (WS) is the second type (WS-2), thereby enabling to utilize them in the recording.

Therefore, if a host or a control unit ('20' in Fig. 8) intends to perform a recording on a specific recording layer at a specific writing speed, the record playback apparatus (FIG. 8) is facilitated to search the corresponding disc information,

thereby enabling to confirm the write strategy (WS) recorded within the corresponding disc information.

For reference, the information of the first and third embodiments can be recorded within the disc information (DI) together or within separate disc control information (not shown in the drawing), respectively. In this case, the applicable speed information disclosed in the third embodiment may have a priority. This is to decide by the information disclosed in the third embodiment whether a corresponding specific writing speed is applicable because a portion of maximum writing speed, minimum writing speed, nominal writing speed, and other writing speed information may not be substantially applicable.

FIG. 8 illustrates an optical disc recording and reproducing apparatus using disc control information according to the present invention. The recording and reproducing apparatus comprises a record/playback unit 10 for recording data on and reproducing data from an optical disc and a controller 20 for controlling the record/playback unit 10. The controller 20 generates a record or playback command for a specific area, and the record/playback unit 10 caries out the record/playback function for the specific area accordingly. The record/playback unit 10 includes an interface 12 for

communicating with an external device, i.e., the controller (or host); a pickup 11 for performing read and write operations with respect to the optical disc; a data processor 13 for modulating the pickup's input signal for performing a recording operation and for demodulating the pickup's output signal for performing a reproduction operation; a servo 14 for controlling the read and write operations of the pickup; a memory 15 for temporarily storing disc control information and user data to be recorded or read; and a microcomputer 16 for respectively controlling each element of the record/playback unit.

**Industrial Applicability**

In the above system, it is also possible to control the recording and/or reproducing of data without the control unit 20. In that case, the Microcomputer 16 may control all units in the record/playback unit 10 as performing the function of the control unit 10.

In a recording data on an optical disc according to the present invention, the optical disc recording and reproducing apparatus first reads the entire disc management area of an inserted optical disc, the read information being disc information of the present invention, which is temporarily stored in the

memory 15. Thus, the recording layer information, recording velocity information, and write strategy fitting the corresponding recording velocity are read out and temporarily stored.

If intending to perform a writing on a specific area within the optical disc, the controller 20 renders such an intent into a writing command and then delivers it to the record/playback unit 10 together with data for writing location information to be recorded. After receiving the writing command, the microcomputer 16 decides the corresponding recording velocity applied to an intended recording layer within the optical disc from the management information stored in the memory 15 and then performs the writing command using the most optimal write strategy by referring to the determined recording velocity.

Specifically, in case that the recording is performed on the optical disc by the first embodiment of the present invention, the microcomputer 16 performs the recording in a manner of applying a different per writing speed write strategy (WS) to each area within the disc by considering the maximum, intermediate, minimum, and other writing speeds.

Accordingly, the present invention provides various methods of providing disc control information coping with higher writing

speed in a high-density optical disc, thereby enabling to uniformly apply the standardized disc control information to efficiently cope with the record/playback of the optical disc.

It will be apparent to those skilled in the art that various modifications and variations can be made in the present invention. Thus, it is intended that the present invention covers the modifications and variations of this invention provided they come within the scope of the appended claims and their equivalents.

CLAIMS:

1. A method of recording control information of recording medium, comprising a step of:

generating the control information including a plurality of recording speed information and at least one write strategy associated with a specific recording speed, wherein the plurality of recording speed information comprises first information used to indicate a recording speed as a maximum recording speed, second information used to indicate a recording speed as a minimum recording speed, third information used to indicate a recording speed as a predetermined recording speed different from the maximum and minimum recording speed, and fourth information used to indicate a recording speed as a basic recording speed, at least one basic recording speed indicated by the fourth information being supported by the recording medium; and

recording the control information on the recording medium.

2. The method of claim 1, wherein the control information further includes recordable speed information used to indicate whether or not a specific recording speed is applicable to the recording medium, the recordable speed information indicating the specific recording speed in a bit position.

3. The method of claim 2, wherein the recordable speed information is configured in a manner that a bit for higher recording speed is set to indicate that a higher applicable recording speed is one of applicable and inapplicable if a bit for lower recording speed is set to indicate that a lower applicable recording speed is applicable, and the bit for the higher recording speed is set to indicate only that the higher applicable recording speed is inapplicable if the bit for lower recording speed is set to indicate that the lower applicable recording speed is inapplicable.

4. A method, comprising steps of:

generating recording speed information, wherein the recording speed information comprises first information used to indicate a recording speed as a maximum recording speed, second information used to indicate a recording

speed as a minimum recording speed, third information used to indicate a recording speed as a predetermined recording speed different from the maximum and minimum recording speed, and fourth information used to indicate a recording speed as a basic recording speed, at least one basic recording speed indicated by the fourth information being supported by a recording medium; and

recording the recording speed information on a specific area of the recording medium.

5. The method of claim 4, further comprising a step of generating recordable speed information used to indicate whether or not a specific recording speed is applicable to the recording medium, the recordable speed information indicating the specific recording speed in a bit position, and

further recording the recordable speed information on a specific area of the recording medium.

6. The method of claim 5, wherein the recordable speed information is configured in a manner that a bit for higher recording speed is set to indicate that a higher applicable recording speed is one of applicable and inapplicable if a bit for lower recording speed is set to indicate that a lower applicable recording speed is applicable, and the bit for the higher recording speed is set to indicate only that the higher applicable recording speed is inapplicable if the bit for lower recording speed is set to indicate that the lower applicable recording speed is inapplicable.

7. The method of claim 4, further comprising a step of recording a plurality of recording speed parameters to be used to record data by the respective recording speeds.

8. The method of claim 4, wherein the recordable speed information has a priority to determine the applicability of specific recording speed than the recording speed information.

9. A method of recording/reproducing data on/from a recording medium, comprising steps of:

reading recording speed information, wherein the recording speed information comprises first information used to indicate a recording speed as a maximum recording speed, second information used to indicate a recording speed as a minimum recording speed, third information used to indicate a recording speed as a predetermined recording speed different from the maximum and minimum recording speed, and fourth information used to indicate a recording speed as a basic recording speed, at least one basic recording speed indicated by the fourth information being supported by the recording medium; and

recording data on a main data area of the recording medium based on the recording speed information.

10. The method of claim 9, further comprising a step of reading write strategy parameters associated with a specific recording speed, the write strategy parameters including write power and pulse timing for recording the data on the recording medium, and

wherein the recording step records the data at a specific speed by using the write strategy parameters.

11. The method of claim 9, wherein the fourth information is used to indicate one or more basic recording speeds and represents whether the one or more basic recording speeds are applicable to the recording medium.

12. The method of claim 9, further comprising reading recordable speed information indicating whether a specific recording speed is applicable to the recording medium, the recordable speed information for indicating the specific recording speed in a bit position,

wherein the recording step further records the data based on the read recordable speed information and recording speed information.

13. The method of claim 12, wherein the recordable speed information is configured in a manner that a bit for higher recording speed is set to indicate that a higher applicable recording speed is one of applicable and inapplicable if a bit for lower recording speed is set to indicate that a lower applicable recording speed

is applicable, and the bit for the higher recording speed is set to indicate only that the higher applicable recording speed is inapplicable if the bit for lower recording speed is set to indicate that the lower applicable recording speed is inapplicable.

14. The method of claim 9, wherein the recordable speed information has a priority to determine the applicability of specific recording speed than the recording speed information.

15. A recording medium having recording speed information, characterized in that the recording speed information comprises first information used to indicate a recording speed as a maximum recording speed, second information used to indicate a recording speed as a minimum recording speed, third information used to indicate a recording speed as a predetermined recording speed different from the maximum and minimum recording speed, and fourth information used to indicate a recording speed as a basic recording speed, at least one basic recording speed indicated by the fourth information being supported by the recording medium.

16. The recording medium of claim 15, further comprising write strategy parameters associated with a specific recording speed, the write strategy parameters including write power and pulse timing for recording data on the recording medium.

17. The recording medium of claim 15, further comprising recordable speed information indicating whether a specific recording speed is applicable to the recording medium, the recordable speed information for indicating the specific recording speed in a bit position.

18. The recording medium of claim 17, wherein the recordable speed information is configured in a manner that a bit for higher recording speed is set to indicate that a higher applicable recording speed is one of applicable and inapplicable if a bit for lower recording speed is set to indicate that a lower applicable recording speed is applicable, and the bit for the higher recording speed is set to indicate only that the higher applicable recording speed is

inapplicable if the bit for lower recording speed is set to indicate that the lower applicable recording speed is inapplicable.

19. The recording medium of claim 15, wherein the fourth information includes at least two basic recording speeds.

20. An apparatus for recording data on a recording medium, comprising:

a pickup unit configured to record data on the recording medium; and

a controller operatively coupled to the pickup unit, configured to identify recording speed information, the recording speed information including first information used to indicate a recording speed as a maximum recording speed, second information used to indicate a recording speed as a minimum recording speed, third information used to indicate a recording speed as a predetermined recording speed different from the maximum and minimum recording speed, and fourth information used to indicate a recording speed as a basic recording speed, at least one basic recording speed indicated by the fourth information being supported by the recording medium; and the controller configured to control the pickup unit to record the data according to the identified recording speed information.

21. The apparatus of claim 20, further comprising a memory configured to store the recording speed information,

wherein the controller is configured to identify the recording speed information stored in the memory.

22. The apparatus of claim 20, wherein the controller is configured to control the pickup unit to read the recording speed information from a specific area of the recording medium, and the controller is configured to identify the recording speed information read by the pickup unit.

23. The apparatus of claim 20, wherein the controller is configured to identify recordable speed information used to indicate whether or not a specific

recording speed is applicable to the recording medium, the recordable speed information indicating the specific recording speed in a bit position.

24. The apparatus of claim 23, wherein the recordable speed information is configured in manner that a bit for higher recording speed is set to indicate that a higher applicable recording speed is one of applicable and inapplicable if a bit for lower recording speed is set to indicate that a lower applicable recording speed is applicable, and the bit for the higher recording speed is set to indicate only that the higher applicable recording speed is inapplicable if the bit for lower recording speed is set to indicate that the lower applicable recording speed is inapplicable,

wherein the controller is configure to control the pickup unit to record the data at a specific recording speed based on the recording speed information and the recordable speed information.

25. An apparatus, comprising:

a pickup configured to read or record data from or on a recording medium; and

a controller, operatively coupled to the pickup, configured to identify recording speed information, the recording speed information including first information used to indicate a recording speed as a maximum recording speed, second information used to indicate a recording speed as a minimum recording speed, third information used to indicate a recording speed as a predetermined recording speed different from the maximum and minimum recording speed, and fourth information used to indicate a recording speed as a basic recording speed, at least one basic recording speed indicated by the fourth information being supported by the recording medium; and the controller configured to control the pickup to record the recording speed information on a specific area of the recording medium.

26. The apparatus of claim 25, further comprising a memory configured to store the recording speed information,

wherein the controller is configured to identify the recording speed information stored in the memory.

27. The apparatus of claim 25, wherein the controller is configured to control the pickup to read the recording speed information from a specific area of the recording medium, and the controller is configured to identify the recording speed information read by the pickup.

28. The apparatus of claim 25, wherein the controller is configured to identify recordable speed information used to indicate whether or not a specific recording speed is applicable to the recording medium, and the controller is control the pickup to record the recordable speed information on a specific area of the recording medium, the recordable speed information indicating the specific recording speed in a bit position.

29. The apparatus of claim 28, wherein the recordable speed information is configured in manner that a bit for higher recording speed is set to indicate that a higher applicable recording speed is one of applicable and inapplicable if a bit for lower recording speed is set to indicate that a lower applicable recording speed is applicable, and the bit for the higher recording speed is set to indicate only that the higher applicable recording speed is inapplicable if the bit for lower recording speed is set to indicate that the lower applicable recording speed is inapplicable.

FIG. 1

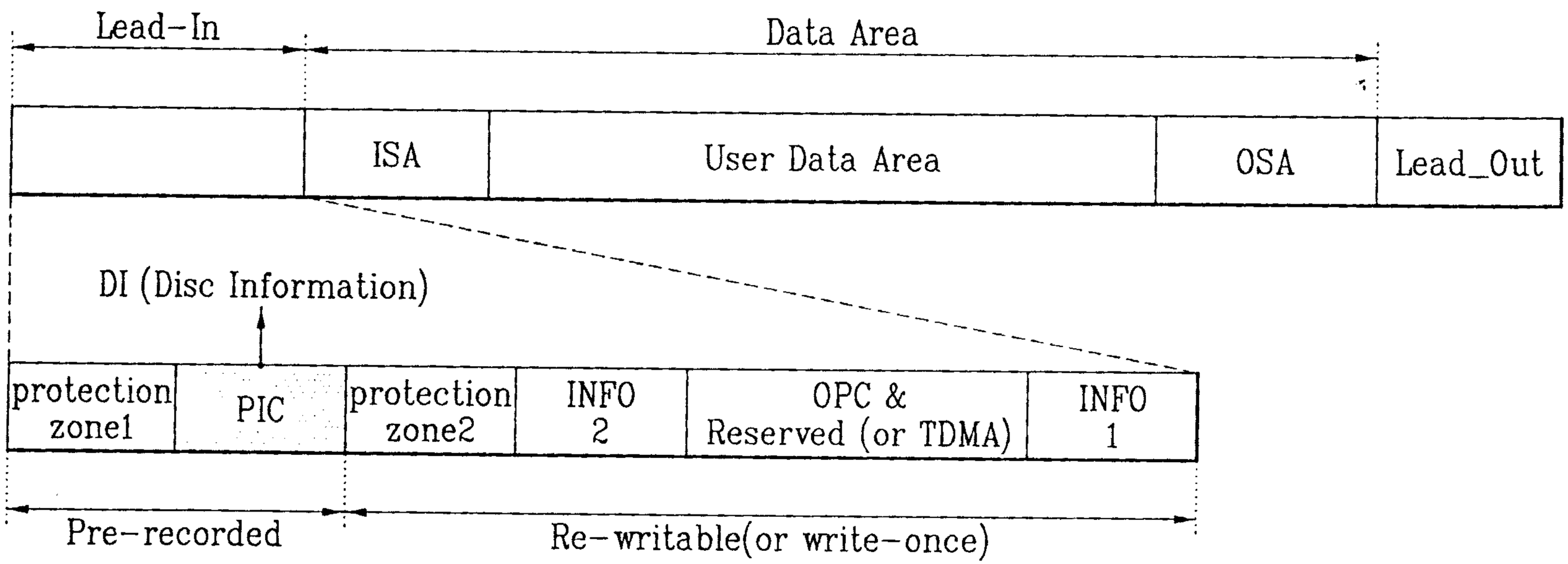


- ISA : Inner Spare Area
- OSA : Outer Spare Area
- PIC : Permanent Information & Control data
- TDMA : Temporary Defect Management Area

FIG. 2

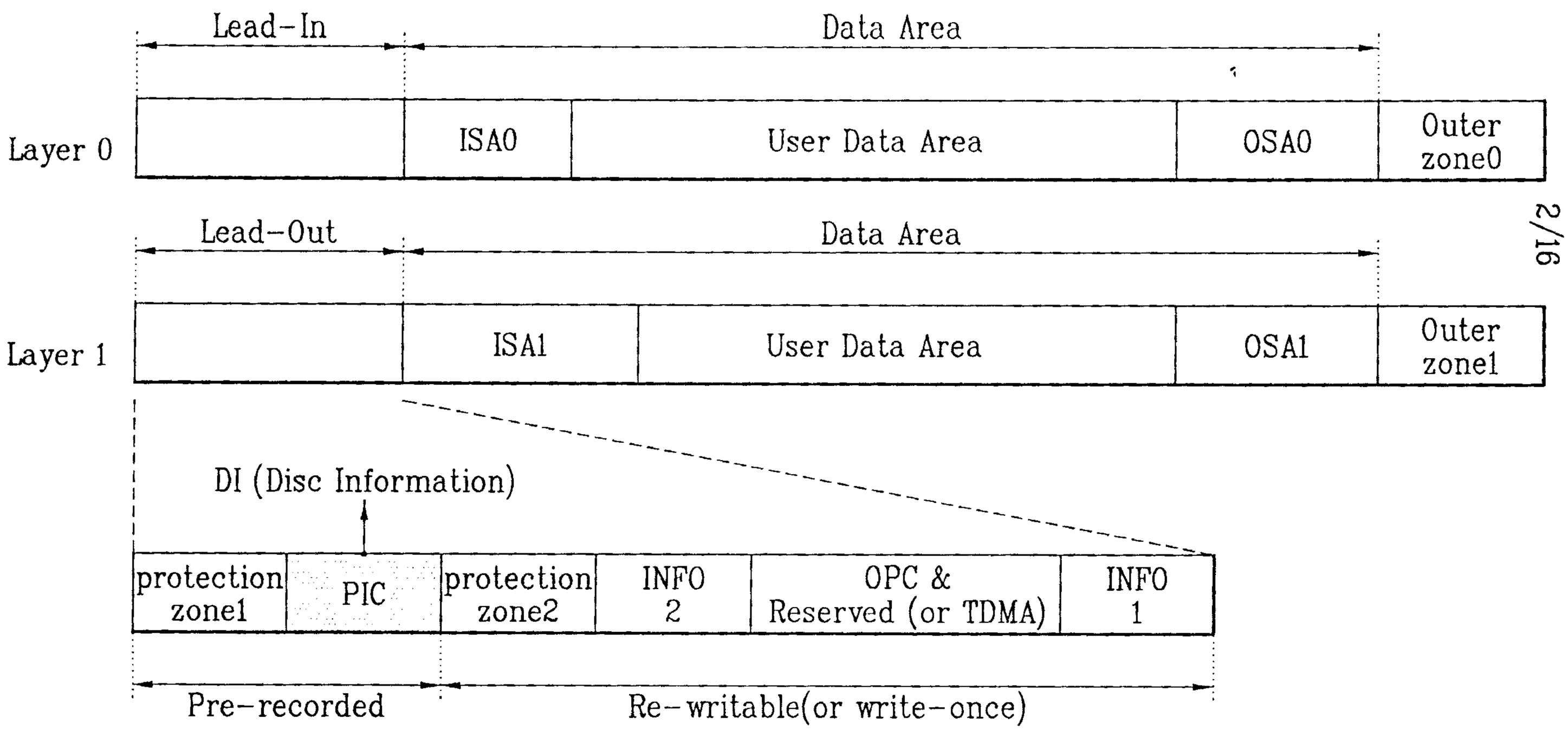
Lead-In
Data Area
Layer 0
ISA0
User Data Area
OSA0
Outer zone0
Lead-Out
Data Area
Layer 1
ISA1
User Data Area
OSA1
Outer zone1
DI (Disc Information)
protection zone1
PIC
protection zone2
INFO 2
OPC & Reserved (or TDMA)
INFO 1
Pre-recorded
Re-writable(or write-once)

# FIG. 3

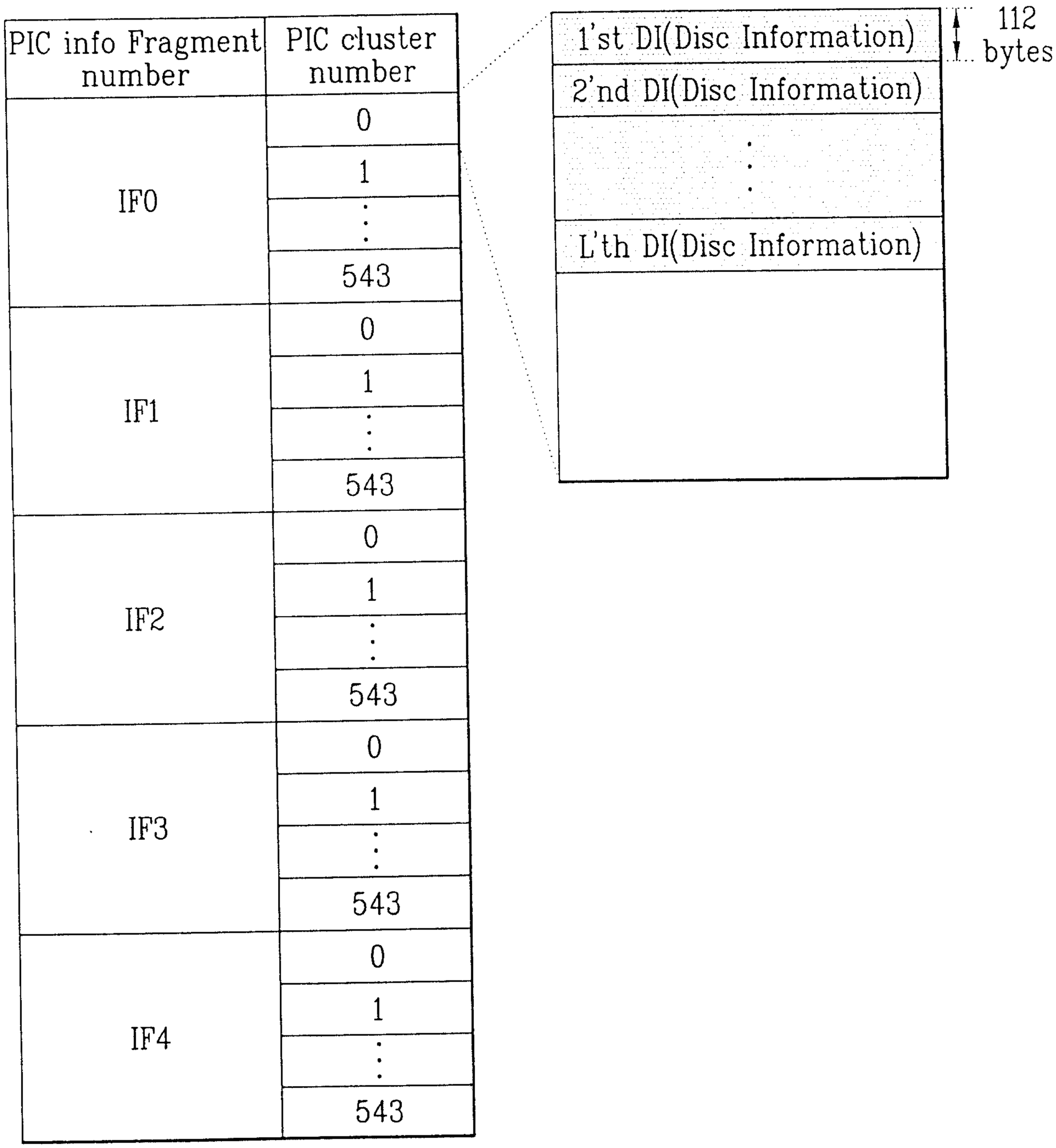
PIC info Fragment number
PIC cluster number
IF0
0
1
543
IF1
0
1
543
IF2
0
1
543
IF3
0
1
543
IF4
0
1
543
1'st DI(Disc Information)
2'nd DI(Disc Information)
L'th DI(Disc Information)
112 bytes

FIG. 4A

Disc Information (112 bytes)

| Byte number | contents | number of bytes |
|---|---|---|
| 0 | Disc Information identifier = "DI" | 2 |
| | | |
| 5 | DI frame sequence number in DI block | 1 |
| | | |
| N to N+4 | Recording Velocities for Vnom, Vmin, Vint, Vmax | 5 |
| | | |
| M to 111 | Write strategy parameters for for Vnom, Vmin, Vint, Vmax | X |

00h
01h
02h
03h
04h
05h
06h
07h
.
.
.

ex. Vnom : 2x (Basic recording speed)
Vmax : 6x
Vmin : Vmax/2.4
Vint : Vmin *1.7

# FIG. 4B

| | Byte number | contents | Number of bytes |
|---|---|---|---|
| Disc Information (112 bytes) | 0 | Disc Information identifier = "DI" | 2 |
| | 5 | DI frame sequence number in DI block | 1 |
| | 19 | Recording velocities For Vint | 1 |
| | 20 to 23 | Write power settings at Vint (MS 4bytes) | 4 |
| | 32 to 35 | Recording velocities For Vnom, Vmax, Vmin | 4 |
| | 44 to 47 | Write power settings at Vint (LS 4bytes) | 4 |
| | 48 to 71 | Write power settings at Vnom, Vmax, Vmin | 3 * 8 |
| | 76 to 84 | dTtop first write pulse start time at Vnom, Vmax, Vmin | 3 * 3 |
| | 89 to 97 | dTtop first erase pulse start time at Vnom, Vmax, Vmin | 3 * 3 |
| | 99 to 101 | dTtop first write pulse start time at Vint | 3 |
| | 102 to 104 | dTtop first erase pulse start time at Vint | 3 |
| | 105 to 111 | reserved | |

FIG. 4C

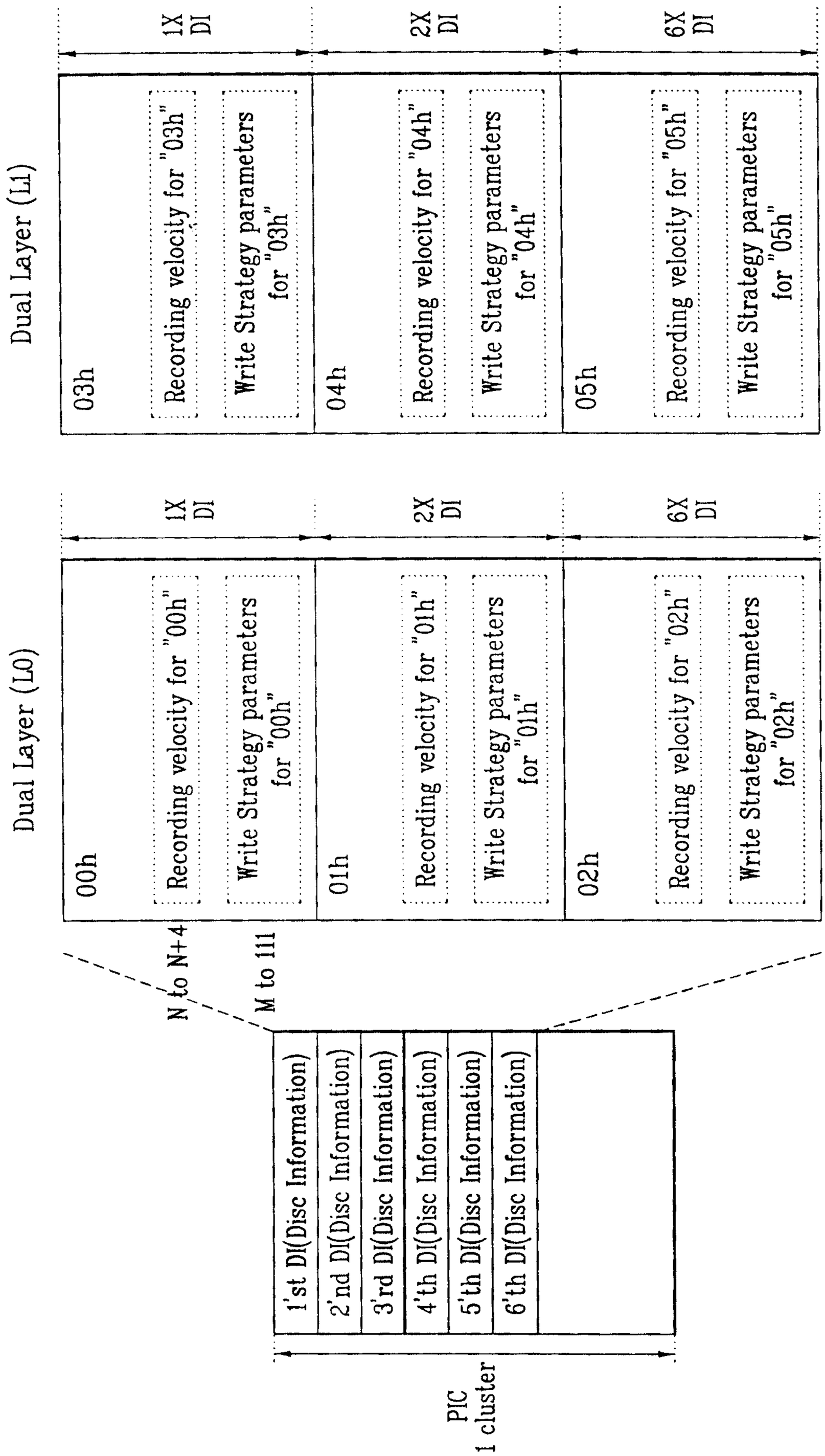
Dual Layer (L1)
1X DI
2X DI
6X DI
03h
Recording velocity for "03h"
Write Strategy parameters for "03h"
04h
Recording velocity for "04h"
Write Strategy parameters for "04h"
05h
Recording velocity for "05h"
Write Strategy parameters for "05h"
Dual Layer (L0)
1X DI
2X DI
6X DI
00h
Recording velocity for "00h"
Write Strategy parameters for "00h"
01h
Recording velocity for "01h"
Write Strategy parameters for "01h"
02h
Recording velocity for "02h"
Write Strategy parameters for "02h"
N to N+4
M to 111
1'st DI(Disc Information)
2'nd DI(Disc Information)
3'rd DI(Disc Information)
4'th DI(Disc Information)
5'th DI(Disc Information)
6'th DI(Disc Information)
PIC
1 cluster

CA 0247499 2004-07-27

FIG. 5A

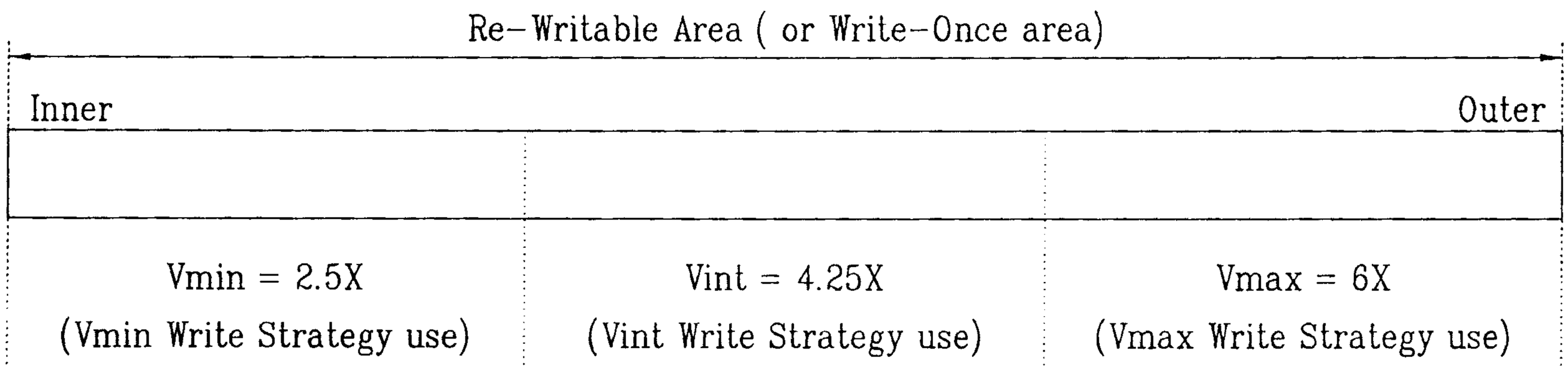

FIG. 5B

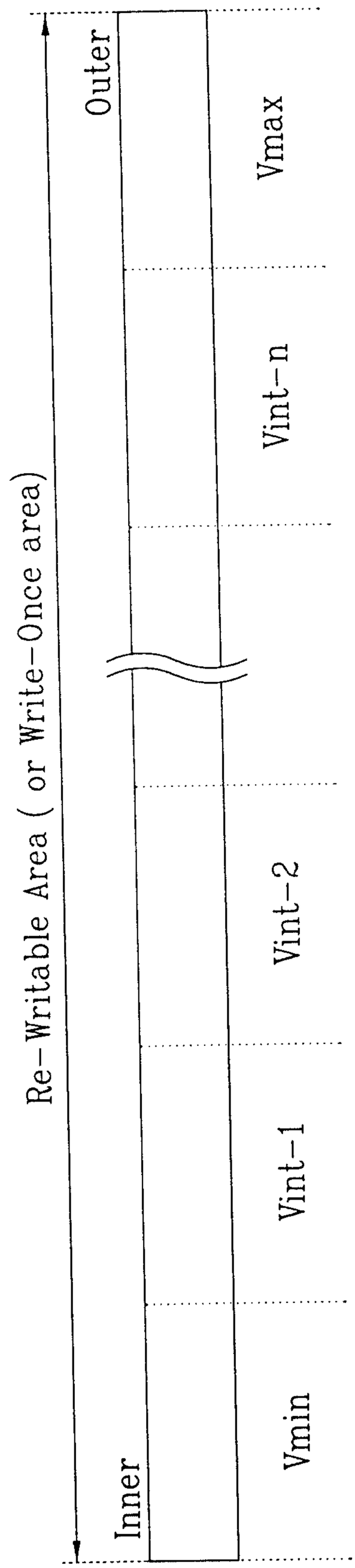
Re-Writable Area ( or Write-Once area)
Outer
Inner
Vmax
Vint-n
Vint-2
Vint-1
Vmin

FIG. 6A

Disc Information (112 bytes)

| Byte number | contents | Number of bytes |
|---|---|---|
| 0 | Disc Information identifier = "DI" | 2 |
| | ⋮ | |
| 5 | DI frame sequence number in DI block | 1 |
| | ⋮ | |
| N to N+1 | Recording Velocity information for layer 0 | 2 |
| M to M+1 | Recording Velocity information for layer 1 | 2 |
| | ⋮ | |
| 44 to 111 | Write strategy parameters | 64 |

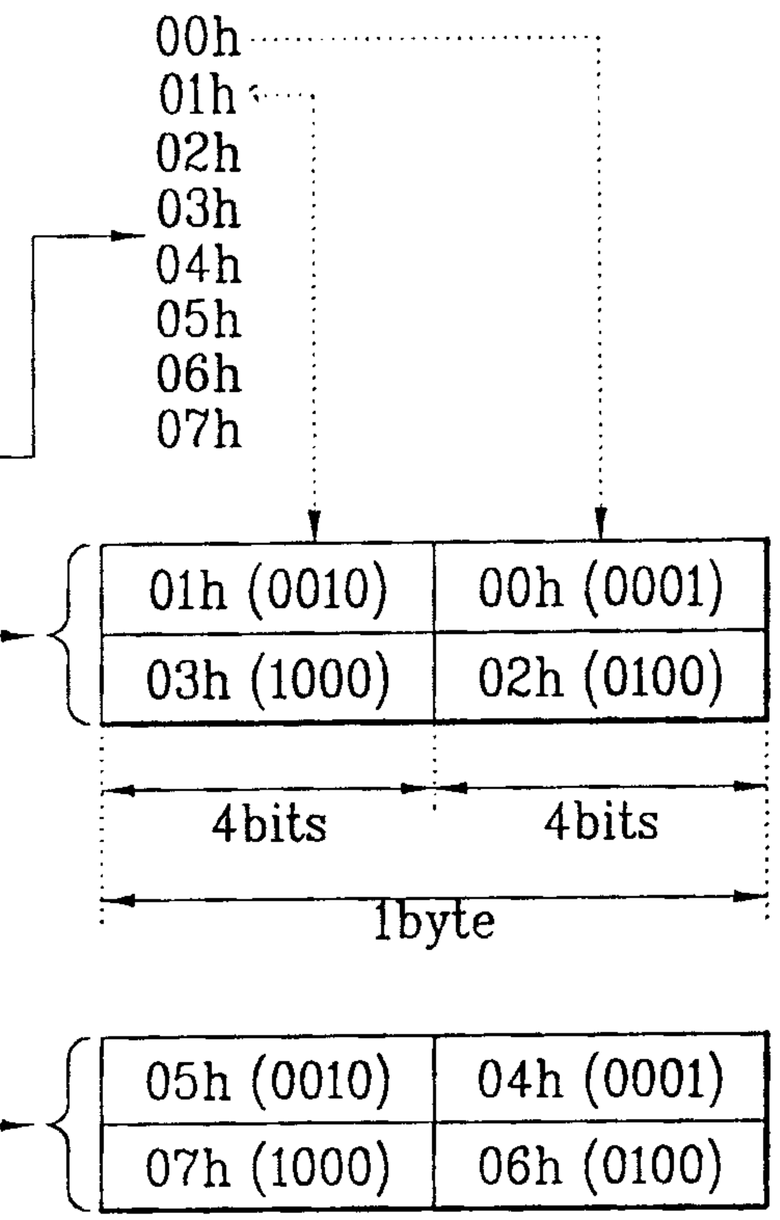

FIG. 6B

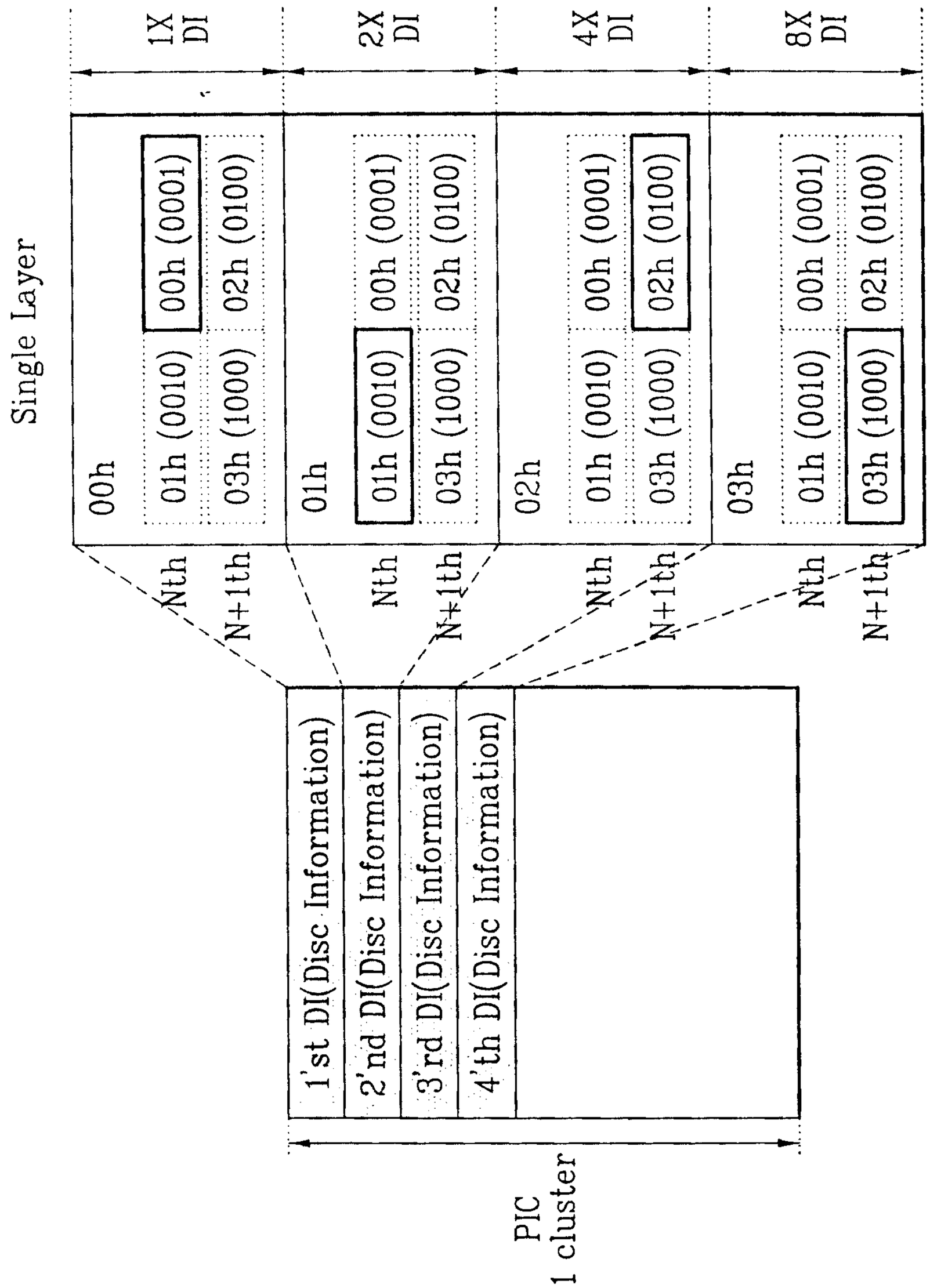
Single Layer
1X DI
2X DI
4X DI
8X DI
00h
01h (0010)
00h (0001)
03h (1000)
02h (0100)
01h
01h (0010)
00h (0001)
03h (1000)
02h (0100)
02h
01h (0010)
00h (0001)
03h (1000)
02h (0100)
03h
01h (0010)
00h (0001)
03h (1000)
02h (0100)
Nth
N+1th
Nth
N+1th
Nth
N+1th
Nth
N+1th
1'st DI(Disc Information)
2'nd DI(Disc Information)
3'rd DI(Disc Information)
4'th DI(Disc Information)
PIC
1 cluster

FIG. 6C

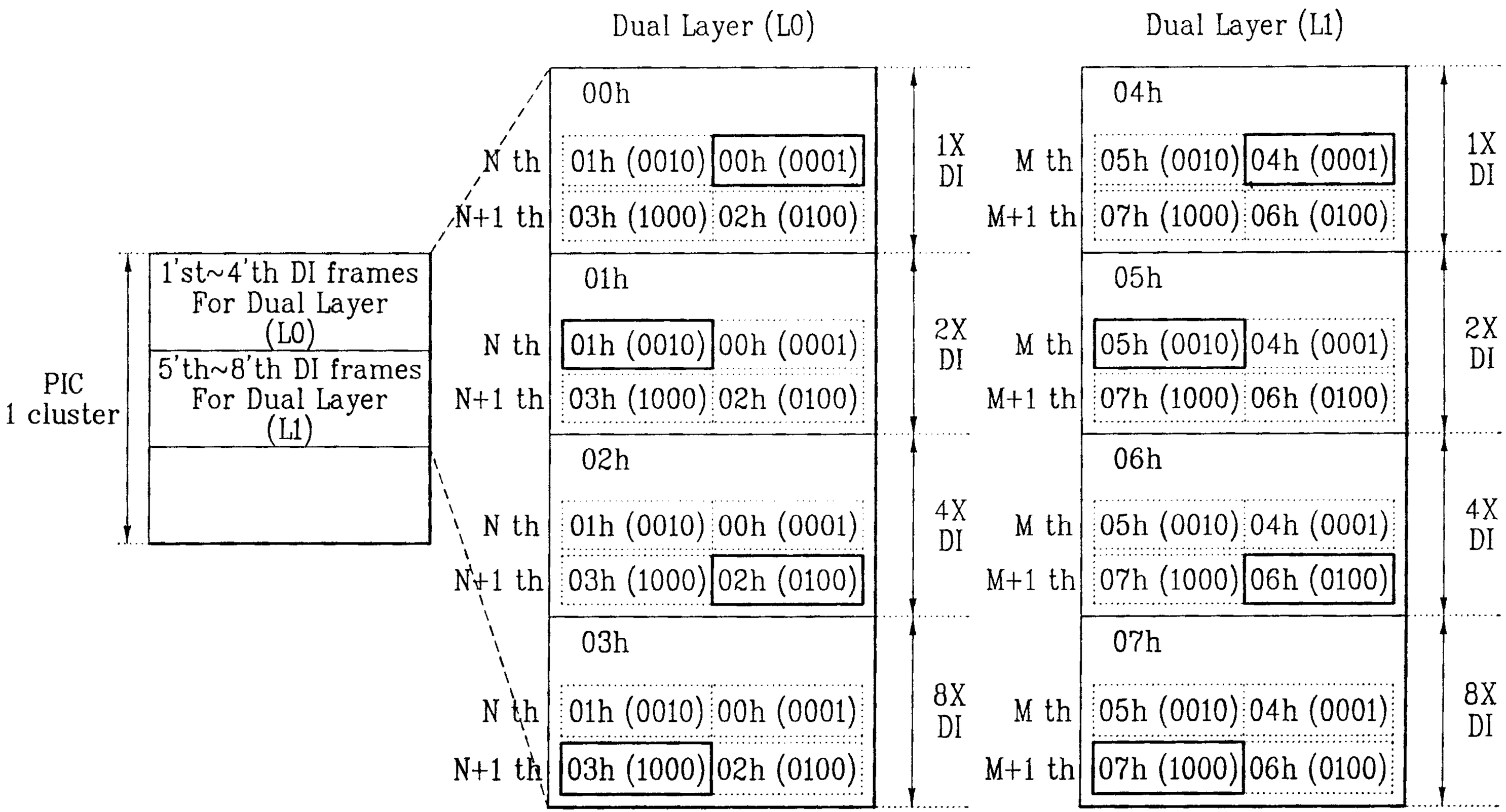
Dual Layer (L0)
Dual Layer (L1)
PIC
1 cluster
1'st~4'th DI frames
For Dual Layer
(L0)
5'th~8'th DI frames
For Dual Layer
(L1)
00h
N th
01h (0010)
00h (0001)
N+1 th
03h (1000)
02h (0100)
1X
DI
01h
N th
01h (0010)
00h (0001)
N+1 th
03h (1000)
02h (0100)
2X
DI
02h
N th
01h (0010)
00h (0001)
N+1 th
03h (1000)
02h (0100)
4X
DI
03h
N th
01h (0010)
00h (0001)
N+1 th
03h (1000)
02h (0100)
8X
DI
04h
M th
05h (0010)
04h (0001)
M+1 th
07h (1000)
06h (0100)
1X
DI
05h
M th
05h (0010)
04h (0001)
M+1 th
07h (1000)
06h (0100)
2X
DI
06h
M th
05h (0010)
04h (0001)
M+1 th
07h (1000)
06h (0100)
4X
DI
07h
M th
05h (0010)
04h (0001)
M+1 th
07h (1000)
06h (0100)
8X
DI

CA 02474995 2004-07-27

# FIG. 7A

Disc Information (112 bytes)

| Byte number | contents | Number of bytes |
|---|---|---|
| 0 | Disc Information identifier = "DI" | 2 |
| 5 | DI frame sequence number in DI block | 1 |
| N | Writing speed flag | 1 |
| L | Number of Recording Layer | 1 |
| M | Write Strategy (WS) Type | 1 |
| ⋮ | ⋮ | ⋮ |
| P ~ 111 | Write strategy parameters | K |

00h : 1 X , Layer 0 DI
01h : 1 X , Layer 1 DI
02h : 2 X , Layer 0 DI
03h : 2 X , Layer 1 DI
04h : 3rd X , Layer 0 DI
05h : 3rd X , Layer 1 DI
06h : 4th X , Layer 0 DI
07h : 4th X , Layer 1 DI
⋮

| b7 | b6 | b5 | b4 | b3 | b2 | b1 | b0 |
|---|---|---|---|---|---|---|---|
| 8th X | 7th X | 6th X | 5th X | 4th X | 3rd X | 2 X | 1 X |

0b : this speed is not applicable
1b : this speed is applicable
ex 0000 1111 ····· (allowable)
0000 1011 ····· (not allowable)

0000 0001 : WS-1 (ex. n-1 WS)
0000 0010 : WS-2 (ex. n/2 WS)
0000 0011 : WS-3
⋮

0000 0001 : 1 layer
0000 0010 : 2 layers
0000 0011 : 3 layers
⋮

# FIG. 7B

Disc Information (112 bytes)

| Byte number | contents | Number of bytes |
|---|---|---|
| 0 | Disc Information identifier = "DI" | 2 |
| 5 | DI frame sequence number in DI block | 1 |
| N1 | Writing speed flag 1 | 1 |
| N2 | Writing speed flag 2 | 1 |
| L | Number of Recording Layer | 1 |
| M | Write Strategy (WS) Type | 1 |
| ⋮ | ⋮ | ⋮ |
| P ~ 111 | Write strategy parameters | K |

| b7 | b6 | b5 | b4 | b3 | b2 | b1 | b0 |
|---|---|---|---|---|---|---|---|
| 8th X | 7th X | 6th X | 5th X | 4th X | 3rd X | 2 X | 1 X |

ex.
0000 1111 ··· (allowable)
0000 1011 ··· (not allowable)

| b7 | b6 | b5 | b4 | b3 | b2 | b1 | b0 |
|---|---|---|---|---|---|---|---|
| 16th X | 15th X | 14th X | 13th X | 12th X | 11th X | 10th X | 9th X |

0b : this speed is not applicable
1b : this speed is applicable

CA 02474995 2004-07-27

FIG. 7C

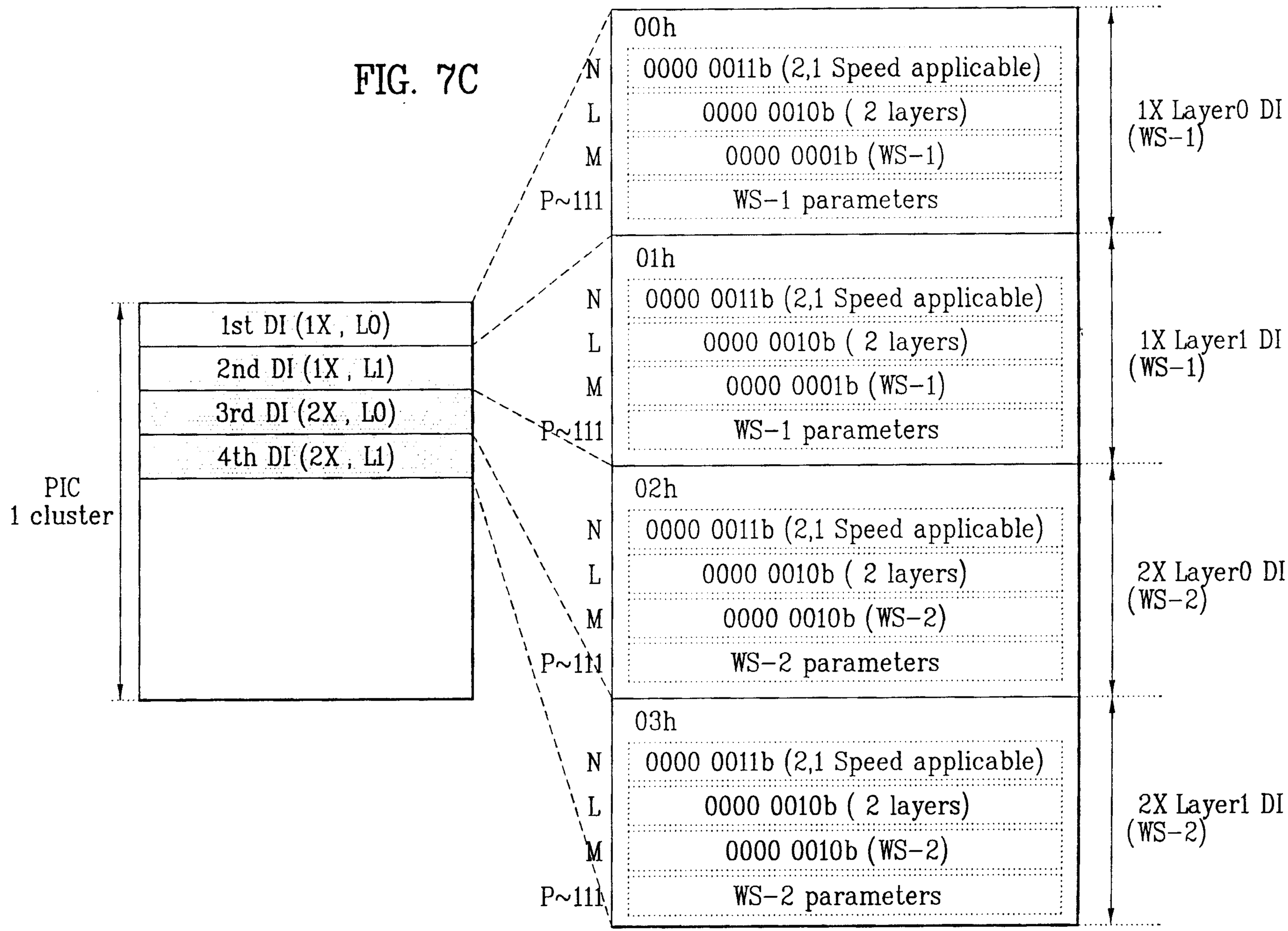

FIG. 7D

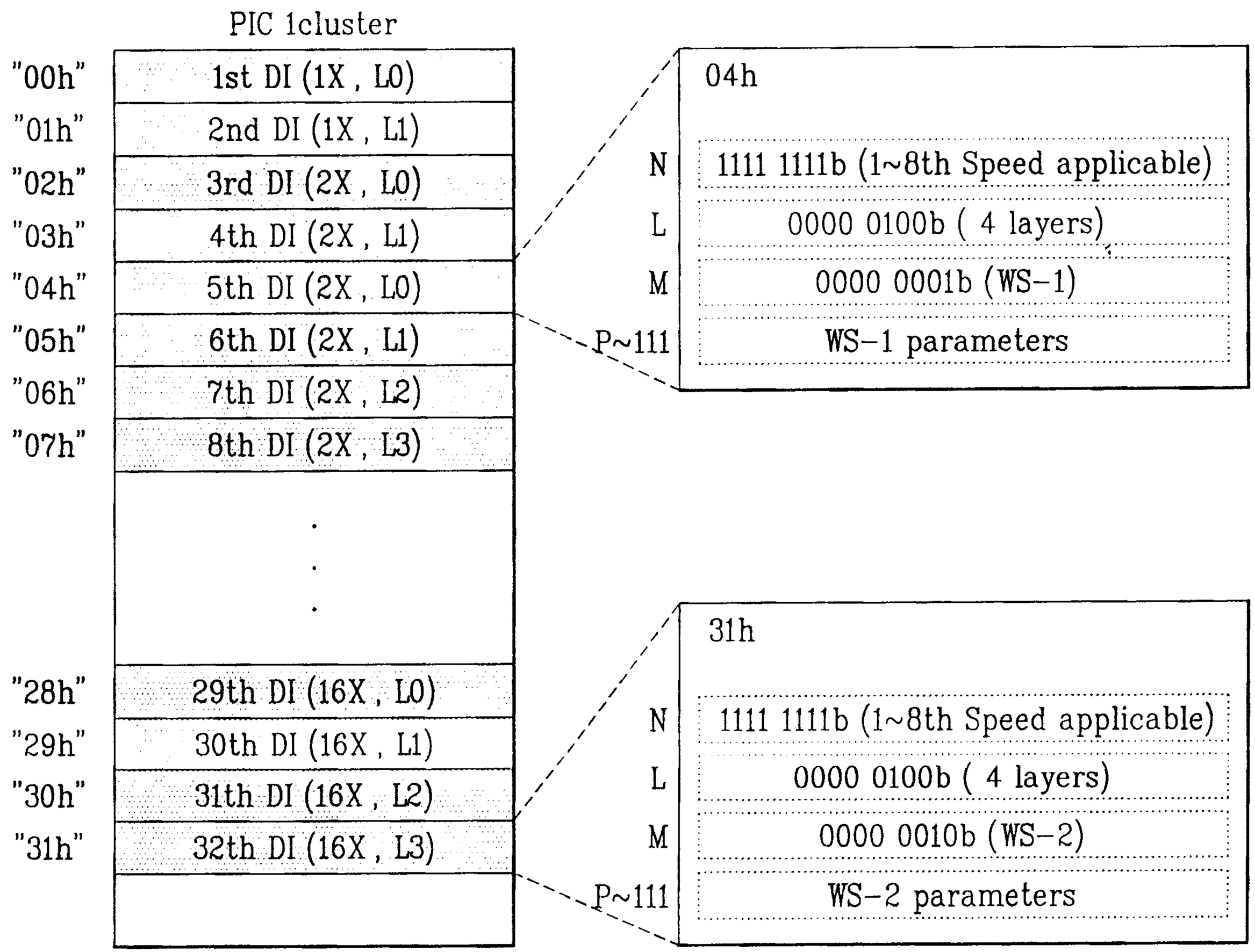
PIC 1cluster
"00h"
1st DI (1X , L0)
"01h"
2nd DI (1X , L1)
"02h"
3rd DI (2X , L0)
"03h"
4th DI (2X , L1)
"04h"
5th DI (2X , L0)
"05h"
6th DI (2X , L1)
"06h"
7th DI (2X , L2)
"07h"
8th DI (2X , L3)
"28h"
29th DI (16X , L0)
"29h"
30th DI (16X , L1)
"30h"
31th DI (16X , L2)
"31h"
32th DI (16X , L3)
04h
N
1111 1111b (1~8th Speed applicable)
L
0000 0100b ( 4 layers)
M
0000 0001b (WS-1)
P~111
WS-1 parameters
31h
N
1111 1111b (1~8th Speed applicable)
L
0000 0100b ( 4 layers)
M
0000 0010b (WS-2)
P~111
WS-2 parameters

FIG. 8

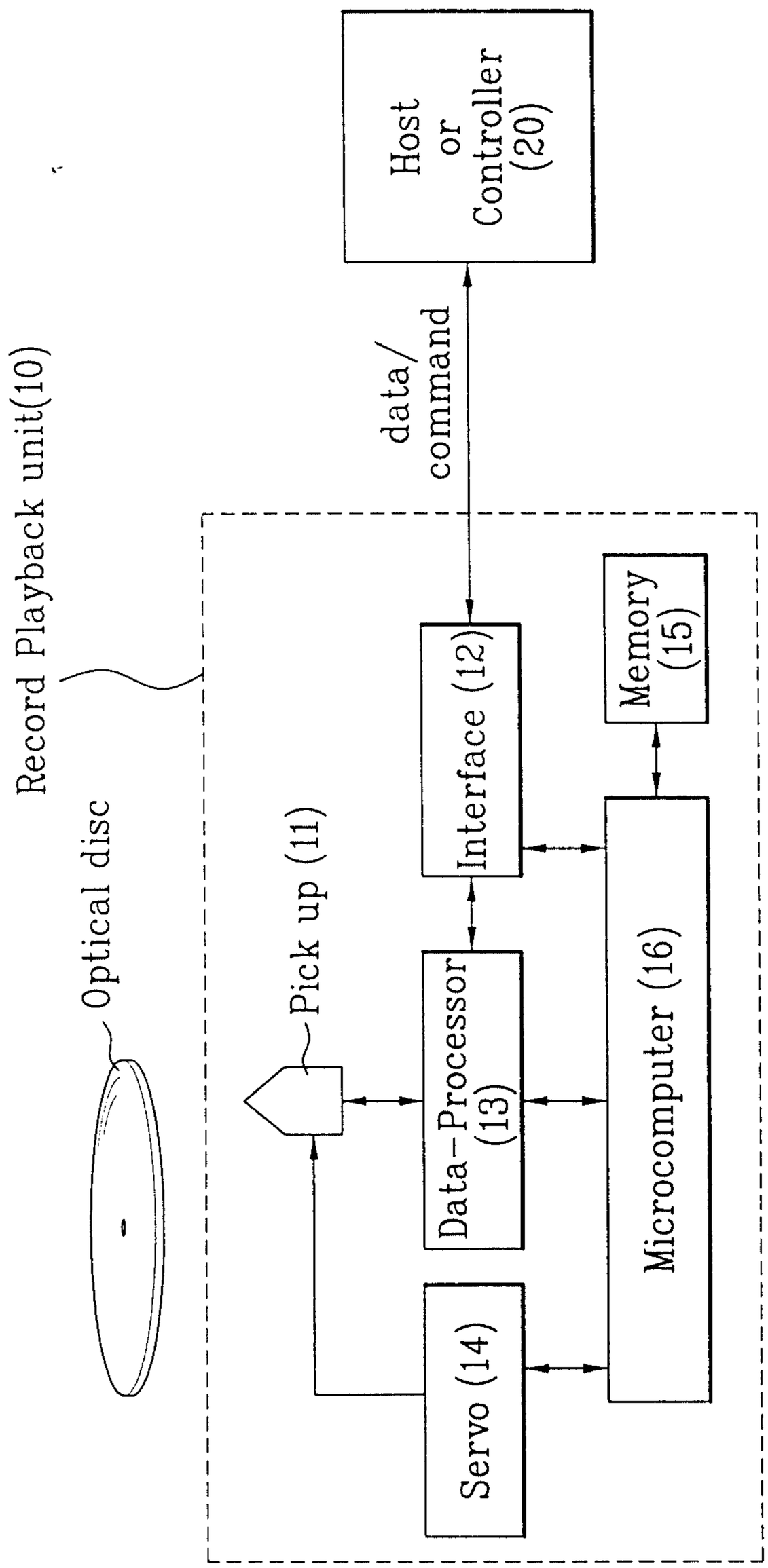
Host
or
Controller
(20)
data/
command
Record Playback unit(10)
Optical disc
Pick up (11)
Interface (12)
Memory
(15)
Data-Processor
(13)
Microcomputer (16)
Servo (14)

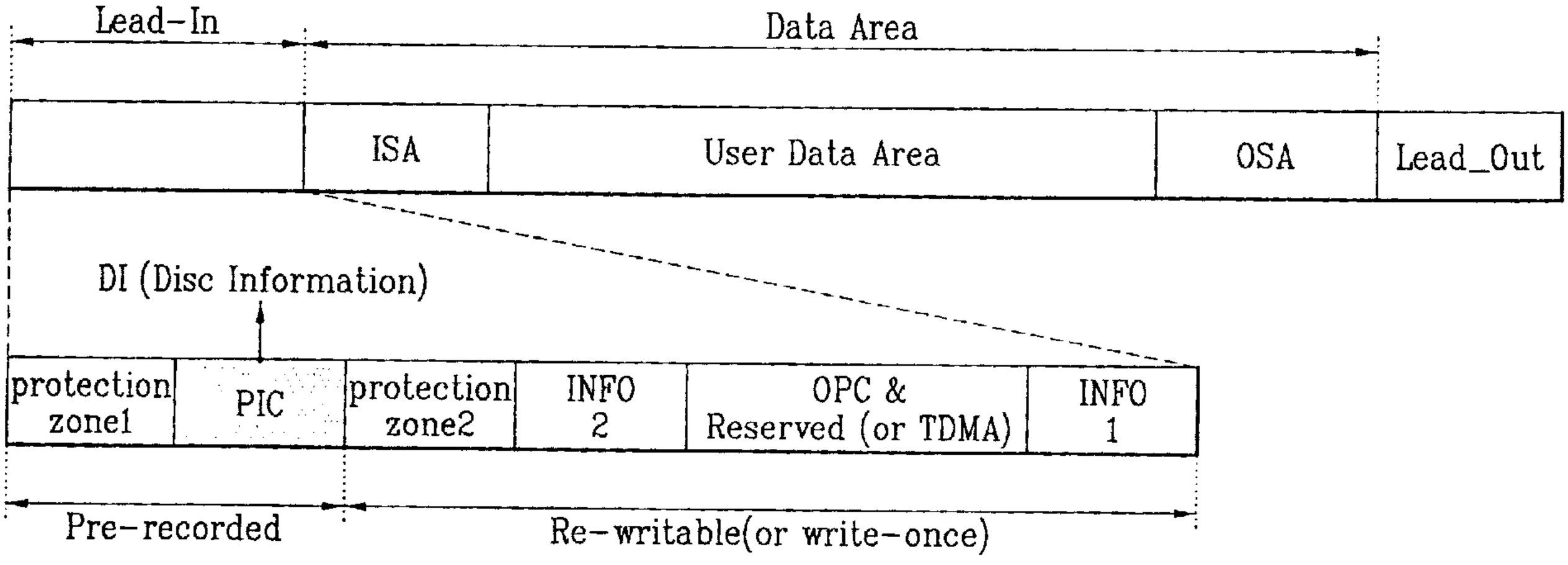


- ISA : Inner Spare Area
- OSA : Outer Spare Area
- PIC : Permanent Information & Control data
- TDMA : Temporary Defect Management Area