PCT WORLD INTELLECTUAL PROPERTY ORGANIZATION
International Bureau

INTERNATIONAL APPLICATION PUBLISHED UNDER THE PATENT COOPERATION TREATY (PCT)

(51) International Patent Classification 4 :		(11) International Publication Number:	WO 89/ 05013
G06K 7/10	A1	(43) International Publication Date:	1 June 1989 (01.06.89)

(21) International Application Number: PCT/US88/03713

(22) International Filing Date: 21 October 1988 (21.10.88)

(31) Priority Application Number: 121,371

(32) Priority Date: 16 November 1987 (16.11.87)

(33) Priority Country: US

(71) Applicant: NCR CORPORATION [US/US]; World Headquarters, Dayton, OH 45479 (US).

(72) Inventors: MERGENTHALER, Barry, Myron ; Rt. #2, Cambridge, OH 43725 (US). DETWILER, Paul, Olivier ; 10 Garfield Avenue, New Concord, OH 43762 (US). COLLINS, Donald, Alexander, Jr. ; 705 North 9th Street, Cambridge, OH 43725 (US).

(74) Agents: SESSLER, Albert, L., Jr. et al.; Intellectual Property Section, Law Department, NCR Corporation, World Headquarters, Dayton, OH 45479 (US).

(81) Designated States: DE (European patent), FR (European patent), GB (European patent), JP.

Published
With international search report.
Before the expiration of the time limit for amending the claims and to be republished in the event of the receipt of amendments.

(54) Title: OPTICAL SCANNING APPARATUS

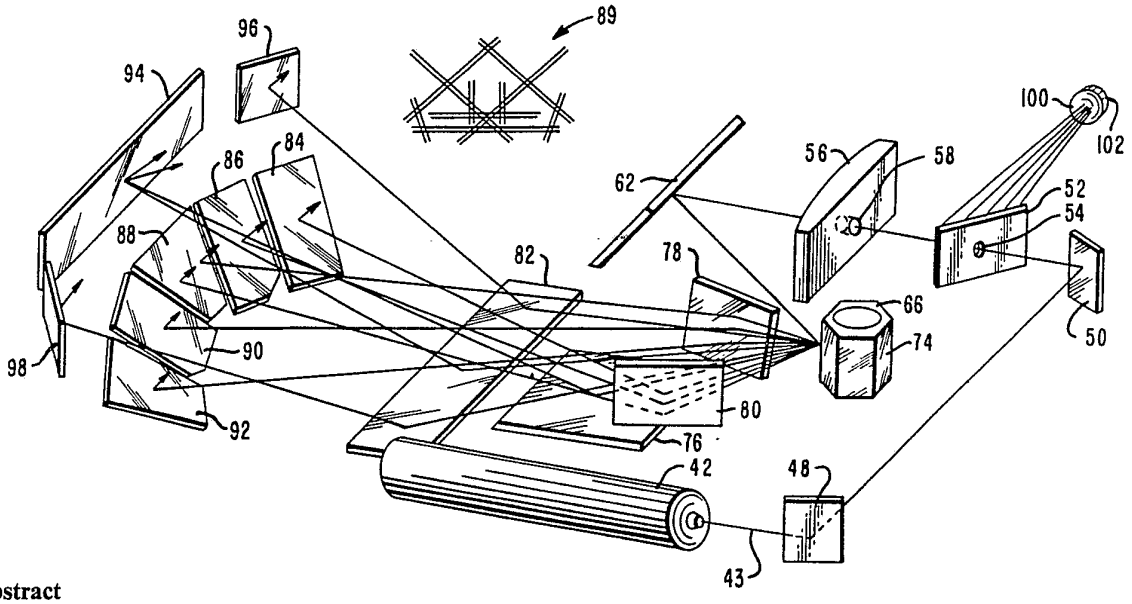

(57) Abstract

An optical scanning apparatus (20) comprises a portable enclosure structure having a cover portion (22) which includes a glass enclosed aperture (24) over which a coded label attached to a purchased merchandise item is moved. A laser beam (43) is projected in the form of a scanning pattern (89) through the aperture (24) and the light reflected from the label is directed to a detector (102) generating electrical signals indicative of the coded information. Part of the mirror system (48, 50, 52, 56, 62) directing the laser beam (94) is mounted on a shelf member (36) positioned intermediate the floor (72) and cover portion (22) of the enclosure, whereby the enclosure may have a compact, shallow structure. The scanning pattern (89) comprises ten sets of scan lines orientated to read a bar code label positioned up to 90° to the surface of the aperture (24).

FOR THE PURPOSES OF INFORMATION ONLY

Codes used to identify States party to the PCT on the front pages of pamphlets publishing international applications under the PCT.

AT	Austria	**FR**	France	**ML**	Mali
AU	Australia	**GA**	Gabon	**MR**	Mauritania
BB	Barbados	**GB**	United Kingdom	**MW**	Malawi
BE	Belgium	**HU**	Hungary	**NL**	Netherlands
BG	Bulgaria	**IT**	Italy	**NO**	Norway
BJ	Benin	**JP**	Japan	**RO**	Romania
BR	Brazil	**KP**	Democratic People's Republic of Korea	**SD**	Sudan
CF	Central African Republic			**SE**	Sweden
CG	Congo	**KR**	Republic of Korea	**SN**	Senegal
CH	Switzerland	**LI**	Liechtenstein	**SU**	Soviet Union
CM	Cameroon	**LK**	Sri Lanka	**TD**	Chad
DE	Germany, Federal Republic of	**LU**	Luxembourg	**TG**	Togo
DK	Denmark	**MC**	Monaco	**US**	United States of America
FI	Finland	**MG**	Madagascar		

OPTICAL SCANNING APPARATUS

Technical Field

The present invention relates to an optical scanning apparatus and more particularly to a compact portable optical bar code scanner which can be mounted in or on a checkout counter in which the checkout operator is in a sitting position with respect to the checkout counter.

Background Art

In present-day merchandising point-of-sale operations, data pertaining to the purchase of a merchandise item is obtained by reading data encoded indicia such as a bar code printed on the merchandise item. In order to standardize the bar codes used in various point-of-sale readout systems, the grocery trade has adopted a uniform product code (UPC) which is in the form of a bar code. Reading systems which have been constructed to read this bar code include hand-held wands which are moved across a label bearing the bar code and stationary optical scanners normally located within the cabinet structure of a checkout counter and in which the bar code label is read when a purchased merchandise item and its associated label are moved across a window in the supporting surface of the counter constituting the scanning area of a counter, which movement is part of the process of loading the item in a bag or baggage cart. There has arisen a need for a stationary optical scanner to be installed in a checkout counter in which the operator is required to be in a sitting position at the check-out counter having a table-height construction. In order to meet this requirement, the depth of the optical scanner is required to be very shallow.

In the co-pending U.S. Patent Application Ser. No. 60586, a compact optical scanner is described

which satisfies the above cited requirement. While this compact scanner read coded labels positioned adjacent the scanner at any angle up to 90° to the reading surface of the scanner, the reading performance of the scan pattern for coded labels flush to the surface of the scanner was not optimum because of the low projection angle towards the ends of the diagonal scan lines in the scan pattern which resulted in excessive elongation of the laser beam diameter when the coded label was relatively flush thereto.

Disclosure of Invention

It is an object of the invention to provide a compact optical scanner for reading bar code labels on merchandise items orientated at up to 90° to the reading surface of the scanner, in which the above disadvantage is alleviated.

Thus according to the invention, there is provided an optical scanning apparatus for reading bar code symbols on objects passing thereover, including a housing having a floor member, a cover member, oppositely located first and second side wall members and a front wall member, wherein a light beam emitted from a source of coherent light is projected in the form of a scanning pattern through an aperture in said cover member over which a merchandise item bearing a coded label is moved, and wherein light beams reflected from said label are detected and electrical signals are generated indicative of the coded information, characterized by a support member mounted between said first and second side wall members intermediate said floor and cover members, said source of coherent light being secured to said first side wall member adjacent said support member; first light reflecting means mounted on said support member for receiving said light beam and reflecting the light beam along a first light path; second light reflecting

means mounted on said support member for receiving the reflected light beam from said first reflecting means for transmitting the light beam along a second light path; light transmitting means mounted on said support member for receiving the reflected light beam from said second reflecting means for transmitting the light beam further along said second light path; third reflecting means mounted on said support member for reflecting the light beam along a third light path in the same plane as the second light path but in an opposite direction; scanning means mounted on said support member in said third light path for cyclically sweeping the light beam along a plurality of fourth lights paths; fourth reflecting means mounted in said fourth light paths and on said floor member for reflecting the light beam along a plurality of fifth light paths; fifth reflecting means mounted in said fifth light paths and on said floor member adjacent the front wall member for reflecting the light beams through said aperture in the cover member for scanning a bar code label positioned adjacent said aperture; and sixth reflecting means mounted in said fifth light paths and above said floor member adjacent the front wall member of the housing structure and the cover member for reflecting the light beams through said aperture in the cover member for scanning a bar code label positioned adjacent said aperture.

Brief Description of the Drawings

One embodiment of the invention will now be described, by way of example, with reference to the accompanying drawings, in which:

Fig. 1 is a perspective view of the compact optical scanner of the present invention;

Fig. 2 is a top view of the compact scanner with a cover and a portion of a shelf removed showing the location of a rotating mirrored spinner member;

Fig. 3 is a sectional view taken on line 3-3 of Fig. 2;

Fig. 4 is a perspective view of the optical geometry of the compact scanner of the present invention;

Fig. 5 is a plan view of the scan pattern generated by the optical geometry of the present invention.

Best Method for Carrying out the Invention

Referring now to Fig. 1 there is shown a perspective view of the compact optical scanner of the present invention which comprises a box-like structure generally indicated by the numeral 20 and which includes a cover portion 22 having centrally located therein a glass covered aperture 24. The structure 20 further includes a pair of sidewall portions 26 and 28 (Fig. 2) and front and rear wall portions 30 and 32 (Fig. 2) having a maximum depth of 13 cm. The structure 20 is normally mounted within a checkout counter (not shown) whose supporting surface is co-planar with the surface of the cover portion 22 enabling a purchased merchandise item having a UPC coded label attached thereto to be moved past the aperture 24 as part of a checkout operation.

Referring now to Figs. 2 and 3, there are shown structural details of the optical scanner. Extending between the sidewall portion 28 and an inner sidewall portion 34 is a shelf member 36. The inner sidewall portion 34 and the sidewall portion 26 form a compartment generally indicated by the numeral 38 in which is located a laser member 42 secured to the sidewall portion 34 which projects a coherent light beam 43 (Fig. 4) through an aperture 44 located in a rear wall portion 46 of the compartment 38. Positioned adjacent the aperture 44 and mounted on the shelf member 36 is a routing mirror 48 positioned at a

45° angle to the centerline of the aperture 44. Also mounted on the shelf member 36 is a second routing mirror 50 positioned at a 45° angle to the rear wall portion 32.

Mounted on the shelf member 36 adjacent the routing mirror 50 and extending in a direction perpendicular to the orientation of the routing mirror 50 is a transparent collection mirror 52 which includes an aperture 54 extending through the mirror 52. The mirror 52 has one side 53 constructed to reflect light impinging thereon in a manner that is well known in the art. Mounted on the shelf member 36 and adjacent the collection mirror 52 is a bifocal lens member 56 which includes a lenslet portion 58. The bifocal lens member 56 is constructed to focus the light reflected from a scanned UPC coded label onto a photodetector 102 (Figs. 2 and 4) while the lenslet portion 58 is constructed to focus the laser beam 43 (Fig. 4) onto the UPC coded label positioned adjacent the aperture 24.

Mounted at an angle of 65° to the shelf member 36, is a routing mirror 62 (Fig. 3). As will be described hereinafter, the routing mirrors 48 and 50 will direct the output light beam of the laser member 42 through the aperture 54 in the collection mirror 52 and the lenslet portion 58 in the bifocal lens 56 to the routing mirror 62 which directs the light beam in a downwardly direction through recessed portion 63 in the shelf member 36 to a position beneath the shelf member 36 and the bifocal lens 56 where the beam impinges on a multifaceted mirrored spinner generally indicated by the numeral 64. The spinner 64 comprises a support member 66 (Fig. 2) secured to a drive shaft 68 which in turn is rotatably mounted between the shelf member 36 and a drive motor 70 secured to the shelf member 36 of the enclosure structure 20 for rotating the spinner 64 at a

predetermined speed, for example, 6144 revolutions per minute. Secured to the support member 66 are six mirror elements 74 (Fig. 3) in which opposite sided mirrors are mounted at various angles to the vertical face of the support member in order to generate a multiple line scanning pattern as will be described more fully hereinafter. Two of the mirrors are pitched backward by 8° to a vertical plane. One of the remaining two sets of mirrors 74 are pitched forward by 3°, while the remaining set of two mirrors are pitched backward by 3°.

Mounted at an angle to the floor portion 72 is a center lower pattern mirror 76 while secured to brackets 60 (Fig. 3) mounted on the floor portion 72 are a right lower pattern mirror 78 and a left lower pattern mirror 80 (Figs. 2 and 3). Mounted at a slight angle to the floor portion 72 is a center upper pattern mirror 82. Located adjacent the front wall portion 30 of the structure 20 and mounted at an angle of 72° to the floor portion 72 are a right end lower pattern mirror 84 and a left end lower pattern mirror 92. Mounted at an angle of 71° to the floor portion 72 is a right middle lower pattern mirror 86 and a left middle lower pattern mirror 90. Mounted at an angle of 65° to the floor portion 72 is a center pattern mirror 88. Mounted to the front wall portion 30 in a direction off-set to a vertical plane by 3° is a center top pattern mirror 94, a right top pattern mirror 96 orientated 49° to the mirror 94 and a left top pattern mirror 98 orientated 49° to the mirror 94. As shown in Fig. 3, the mirrors 84-92 inclusive are orientated at an angle with respect to the floor portion 72. These mirrors act together with the mirrors 94-96 inclusive to direct the scanning light beams received from the pattern mirrors 76-82 inclusive through the aperture 24 (Fig. 1) to form a scan pattern generally indicated by the numeral 89

(Fig. 5) which consists of ten sets of scan lines 99 for scanning the UPC label positioned adjacent the aperture 24. Each set of scan lines is generated by a facet 74 (Figs. 3 and 4) orientated at 8° to a vertical plane and one of the facets 74 orientated at either plus or minus 3°. The following table discloses the mirrors which generate the scan lines of the scan pattern 89 (Fig. 5).

Table

Scan Lines	Mirrors	Facet Angle
A	82 and 94	+8°
B	76 and 94	-3°
C-L	80 and 88	+8°
C-R	78 and 88	+8°
D-L	82 and 96	+8°
D-R	82 and 98	+8°
E-L	78 and 90	+3°
E-R	80 and 86	+3°
F-L	80 and 84	-3°
F-R	78 and 92	-3°

Located in the sidewall portion 28 (Fig. 2) of the enclosure structure 20 is a colored meniscus lens member 100 in which is positioned the photodetector 102 for converting the light beams received from the lens member 100 into electrical signals which are processed by the scanner electronics in a manner that is well known in the art. The color of the lens 100 is chosen to filter out wavelengths of light reflected from the UPC label which are less than that of the laser light beam, such as the blue and the green light band, resulting in the transmission of light beams to the photodetector 102 having a band pass centered on the wavelength of the laser light beam as will be described hereinafter. The collection mirror 52 is a spectrally selective "cold" mirror which reflects light having a wavelength equal to or

less than that of the laser light beam outputted by the laser member 42. Side 53 of the mirror 52 is painted with a light absorbing material such as black aluminum which absorbs light having a wavelength greater than that of the laser light beam, such as the infrared band, while reflecting the remaining bands of reflected light.

Referring to Fig. 4, there is shown a perspective view of the optical elements found in the enclosure structure 20 for directing the output light beam 94 of the laser member 42 in a direction to generate the scan pattern 89 (Fig. 5). The laser light beam 94 outputted from the laser tube 42 is routed via the routing mirrors 48 and 50 and through the aperture 54 in the collection mirror 52 to the lenslet portion 58 of the bifocal lens 56. The lenslet portion 58 will direct the light beam 94 at the mirror 62 which reflects the light beam at the rotating mirrored spinner 64. The light beam, upon striking the various facets 74 of the spinner 64, will be directed to the pattern mirrors 76-82 inclusive as set out in the table. The mirrors 76-82 inclusive will reflect the received light beams towards the mirrors 84-98 which reflect the beams through the aperture 24 (Fig. 1) in the cover portion 22 of the optical scanner 20. The resulting scan pattern 89 that is generated by this mirror system comprises sets of scan lines 99 which cross, as shown in Fig. 5, to provide a highly efficient scan pattern capable of reading a bar code label orientated up to 90° to the cover portion 22.

After striking the UPC label, the diverging reflected light beams are retro-directed through the aperture 24 to the pattern mirrors 76-98 inclusive and to the spinner 64 which directs the reflected light beams towards the routing mirror 62 from where the light beams are directed to the bifocal lens 56. The

lens 56 will focus the received light beams at the photodetector 102 (Fig. 2) by directing the reflected light beam at the collection mirror 52 which reflects the received light beams towards the lens 100 from where the photodetector 102 will generate electrical signals for processing the data incorporated in the bar code label. Since the reflected light beams may contain sunlight, the mirror 52 and the lens 100 filter out all wavelengths of light except that of the laser light thus insuring that the light beams received by the photodetector 102 will enable the photodetector to generate electrical signals which accurately represent the data contained in the bar code label. It will thus be seen that the mirror arrangement of the described optical scanner generates a scan pattern for reading a bar code label comprising diagonal scan lines which are shorter than those in the above-cited U.S. Patent Application Serial No. 605867, which results in higher projection angles which in turn results in less beam elongation enabling the scanner to read bar code labels which may be orientated flush to the top surface of the scanner.

Claims

1. An optical scanning apparatus (20) for reading bar code symbols on objects passing thereover, including a housing having a floor member (72), a cover member (22), oppositely located first and second side wall members (26, 28) and a front wall member (30), wherein a light beam (43) emitted from a source of coherent light (42) is projected in the form of a scanning pattern (89) through an aperture (24) in said cover member (22) over which a merchandise item bearing a coded label is moved, and wherein light beams reflected from said label are detected and electrical signals are generated indicative of the coded information, characterized by a support member (36) mounted between said first (26) and second (28) side wall members intermediate said floor (72) and cover members (22), said source of coherent light (42) being secured to said first side wall member (26) adjacent said support member (36); first light reflecting means (48) mounted on said support member (36) for receiving said light beam (43) and reflecting the light beam (43) along a first light path; second light reflecting means (50) mounted on said support member (36) for receiving the reflected light beam (43) from said first reflecting means (48) for transmitting the light beam along a second light path; light transmitting means (56) mounted on said support member (36) for receiving the reflected light beam (43) from said second reflecting means (50) for transmitting the light beam further along said second light path; third reflecting means (62) mounted on said support member (36) for reflecting the light beam (43) along a third light path in the same plane as the second light path but in an opposite direction; scanning means (66, 74) mounted on said support member (36) in said third light path for cyclically sweeping the light beam (43) along a plurality of fourth light

paths; fourth reflecting means (76, 78, 80, 82) mounted in said fourth light paths and on said floor member (72) for reflecting the light beam along a plurality of fifth light paths; fifth reflecting means (84, 86, 88, 90, 92) mounted in said fifth light paths and on said floor member (72) adjacent the front wall member (30) for reflecting the light beams through said aperture (24) in the cover member (22) for scanning a bar code label positioned adjacent said aperture (24); and sixth reflecting means (94, 96, 98) mounted in said fifth light paths and above said floor member (72) adjacent the front wall member (30) of the housing structure and the cover member (22) for reflecting the light beams through said aperture (24) in the cover member (22) for scanning a bar code label positioned adjacent said aperture (24).

2. A scanning apparatus according to claim 1, characterized in that said scanning means includes a multifaceted mirror member (66) positioned between said floor member (72) and said support member (36) adjacent said light transmitting means (52, 56) in which each of the mirror facets (74) is mounted on the mirror member (66) at an angle different from its adjacent facets (74) and drive means (70) mounted on said support member (36) and rotatably supporting said multifaceted mirror member (66) for rotating said multifaceted mirror member (66) whereby said multifaceted mirror member (66) reflects the light beam along said plurality of fourth light paths.

3. A scanning apparatus according to claim 2, characterized in that the multifaceted mirror member (66) comprises three sets of oppositely mounted mirror facets (74) with each set of mirror facets (74) mounted to the mirror member (66) at an angle to a common axis different from its adjacent mirror facets

(74) for cyclically sweeping the beam along six separate fourth light paths towards said fourth reflecting means (76, 78, 80, 82).

4. A scanning apparatus according to claim 3, characterized in that said fourth reflecting means (76, 78, 80, 82) includes first and second mirror members (76, 82) mounted adjacent said rotating multifaceted mirror member (66) substantially parallel to the surface of the floor member (72) in which the first mirror member (76) receives a light beam reflected from a mirror facet (74) mounted to the multifaceted mirror member (66) at a first angle and said second mirror member (82) receives a light beam reflected from a mirror facet (74) mounted to the multifaceted mirror member (66) at a second angle.

5. A scanning apparatus according to claim 4, characterized in that said fifth reflecting means comprises a plurality of third mirror members (84, 86, 88, 90, 92) mounted in an arcuate pattern at an acute angle to the floor member (72) adjacent said front wall member (30) of the housing structure for reflecting the light beams through said aperture (24).

6. A scanning apparatus according to claim 5, characterized in that said sixth reflecting means comprises a plurality of fourth mirror members (94, 96, 98) mounted to said front wall member (30) above said floor member (72), said fourth reflecting mirror members (94, 96, 98) orientated in a direction substantially perpendicular to the floor member (72).

7. A scanning apparatus according to claim 6, characterized in that said plurality of third mirror members (84, 86, 88, 90, 92) are mounted to reflect light beams in a scan pattern through said

aperture (24) including a plurality of sets of first scan lines (E-L, E-R, F-L, F-R) offset to each other; and in that said plurality of fourth mirror members includes a central mirror member (94) mounted in two of said fifth light paths for reflecting light beams in a scan pattern through said aperture including two sets of substantially parallel spaced apart second scan lines (A, B) for scanning a bar code label positioned adjacent said aperture (24).

8. A scanning apparatus according to claim 7, characterized in that said plurality of fourth mirror members includes two side mirror members (96, 98) mounted at an angle to said central mirror member (94) for projecting the light beams in a scan pattern through said aperture (24) including two sets of third scan lines (D-L, D-R) orientated at an acute angle to each other and at an obtuse angle to said second scan lines (A, B).

9. A scanning apparatus according to claim 8, characterized in that one of said third mirror members (88) is mounted in two of said fifth light paths for reflecting light beams in a scan pattern through said aperture (24) including two sets of parallel fourth scan lines (C-L, C-R) orientated in a direction perpendicular to said second scan lines (A, B).

10. A scanning apparatus according to claim 9, characterized in that each set of scan lines comprises two parallel scan lines.

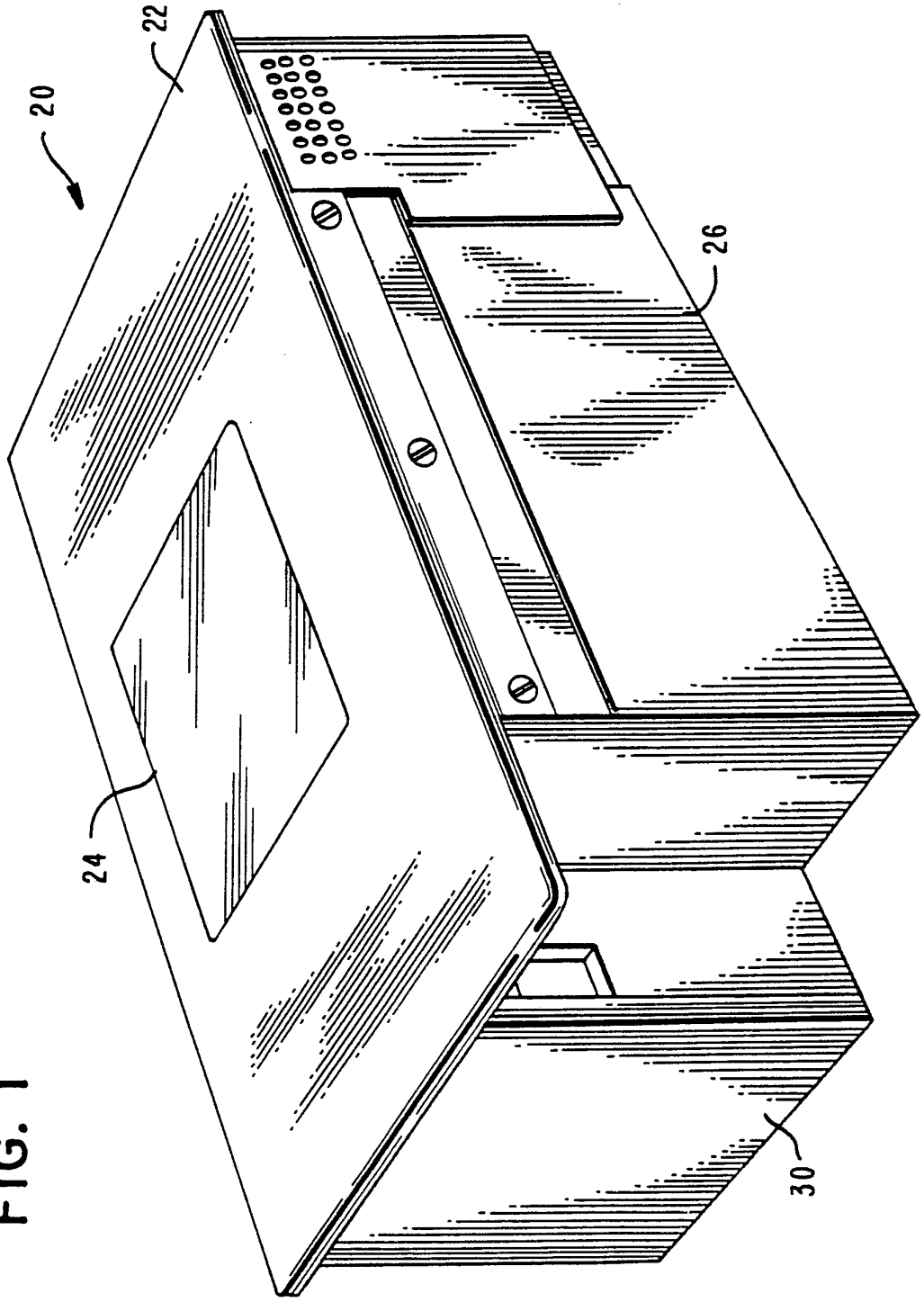

FIG. 1

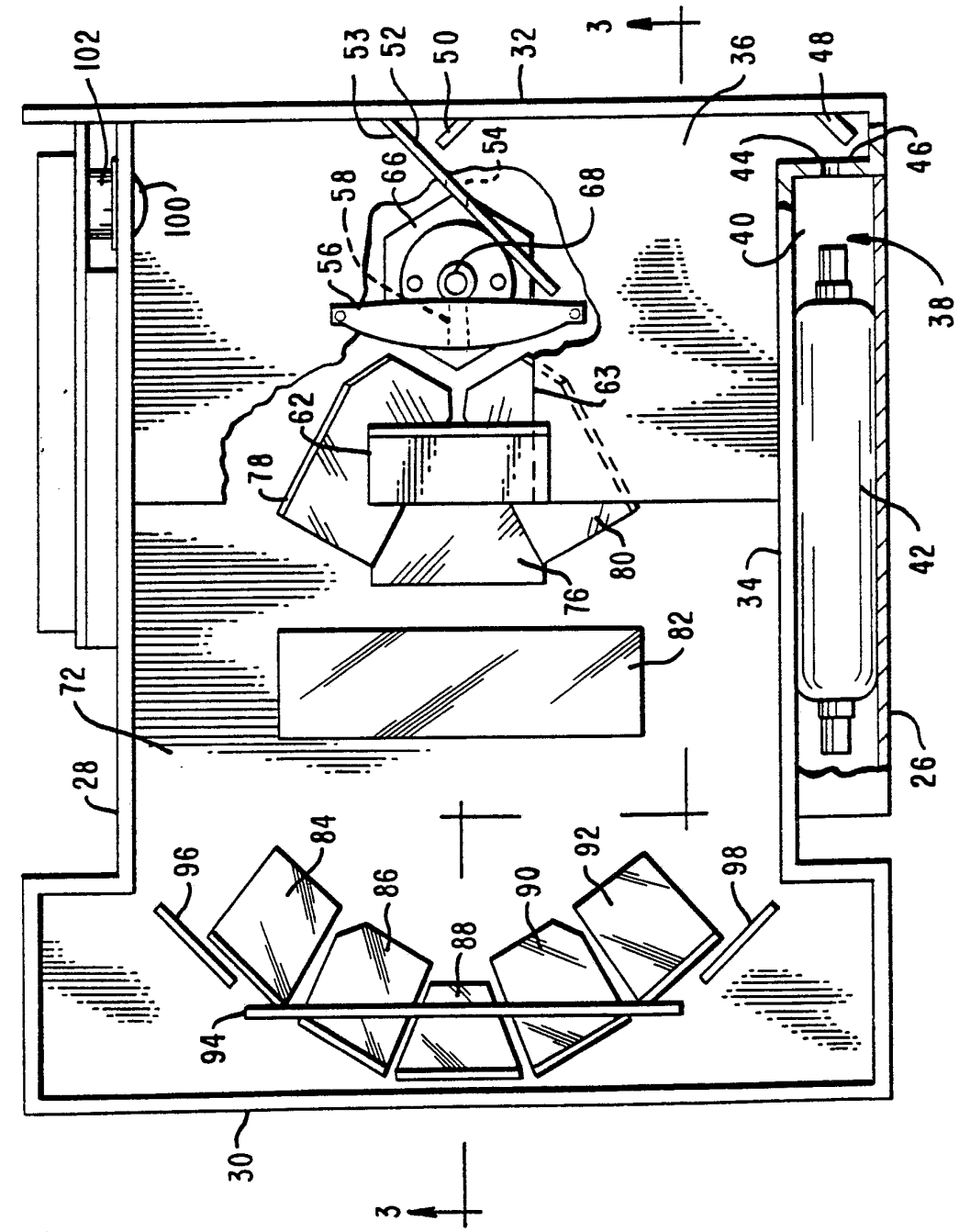
102
100
53
52
50
32
3
36
48
54
66
58
56
68
44
46
40
38
63
62
78
80
76
34
42
82
72
28
26
96
84
86
88
90
92
98
94
30
3

FIG. 2

FIG. 3

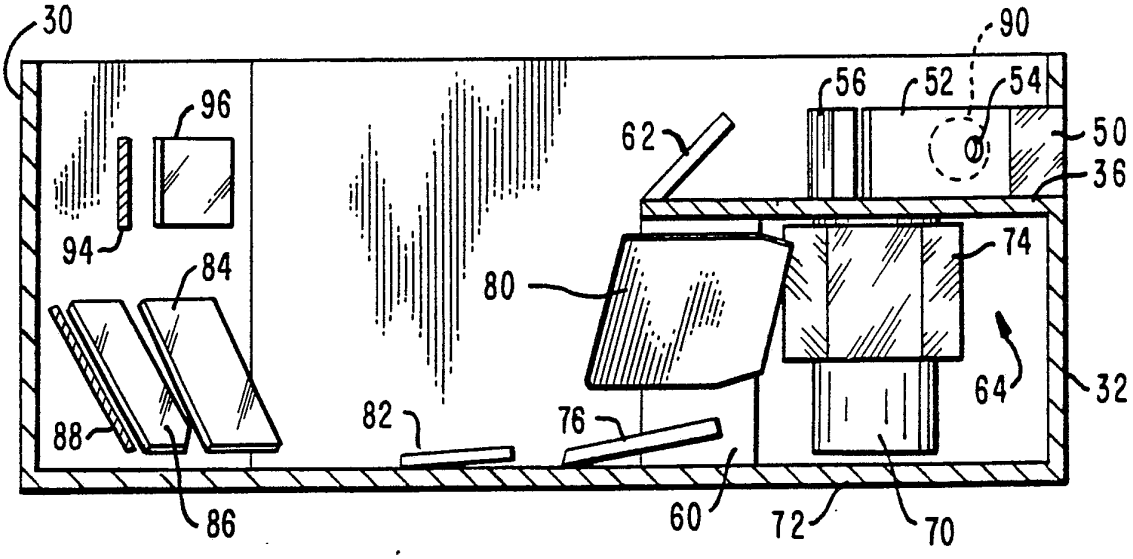
30
90
96
56
52
54
62
50
36
94
84
80
74
64
32
88
82
76
86
60
72
70

FIG. 5

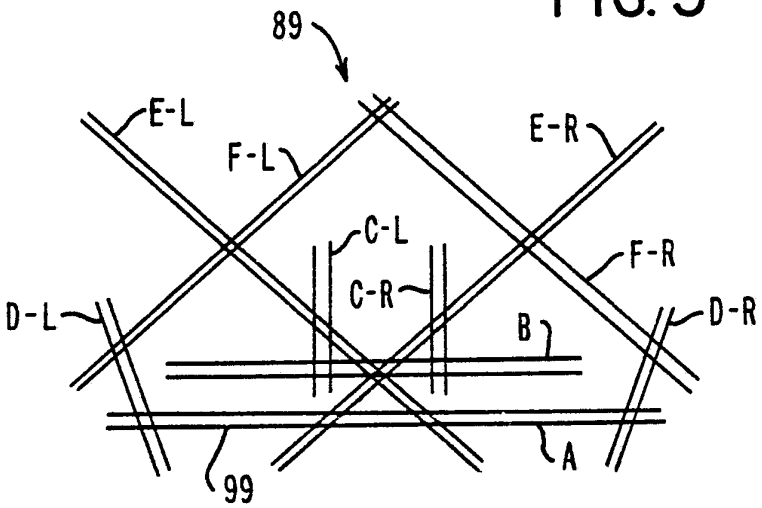
89
E-L
F-L
E-R
C-L
F-R
C-R
D-L
D-R
B
A
99

FIG. 4

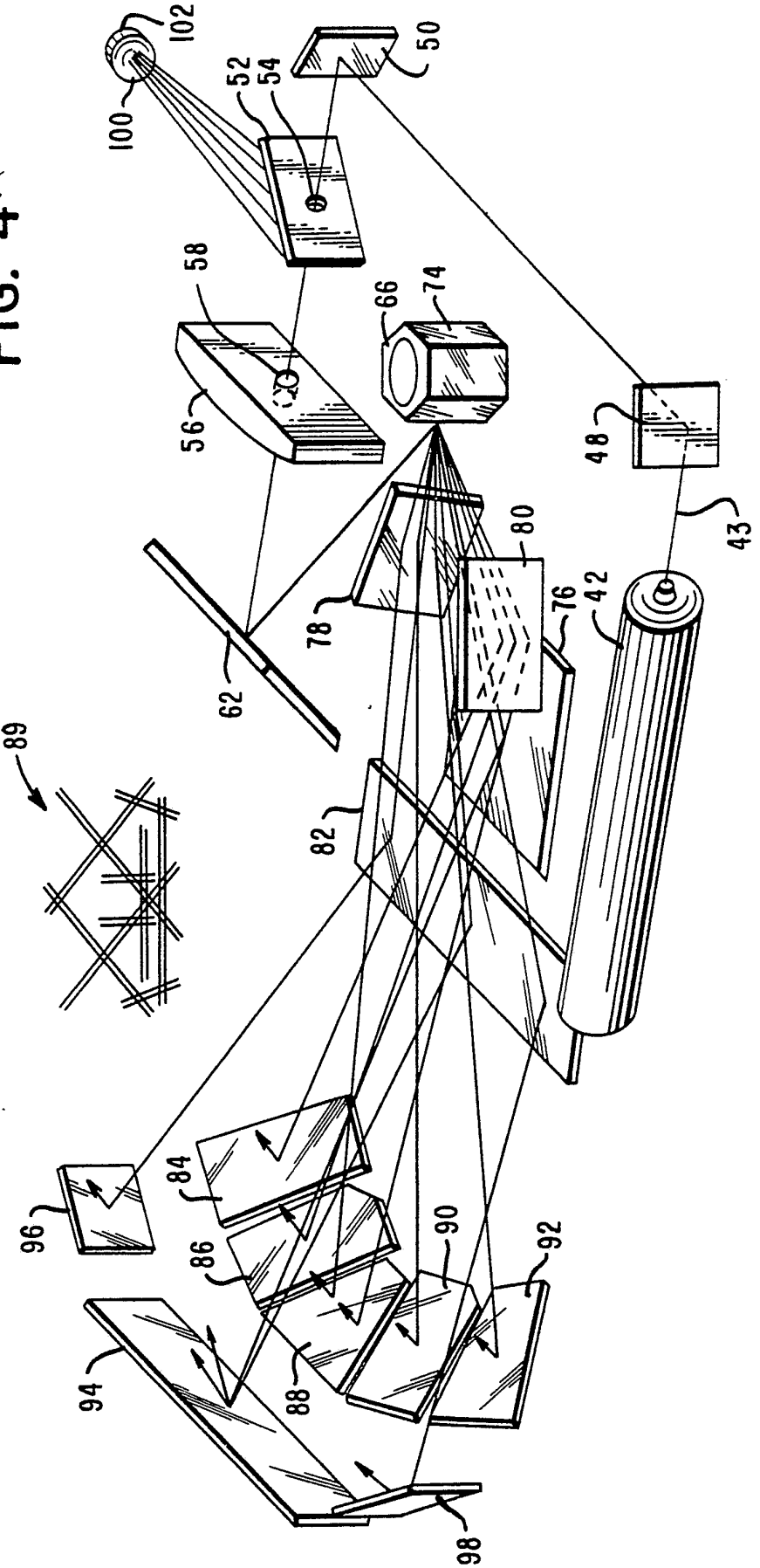
102
100
52
54
50
58
66
74
56
48
43
80
78
76
42
62
89
82
84
96
86
90
92
94
88
98

INTERNATIONAL SEARCH REPORT

International Application No PCT/US 88/03713

I. CLASSIFICATION OF SUBJECT MATTER (if several classification symbols apply, indicate all) [6]

According to International Patent Classification (IPC) or to both National Classification and IPC

IPC[4]: G 06 K 7/10

II. FIELDS SEARCHED

Minimum Documentation Searched [7]

Classification System	Classification Symbols
IPC[4]	G 06 K

Documentation Searched other than Minimum Documentation to the Extent that such Documents are Included in the Fields Searched [8]

III. DOCUMENTS CONSIDERED TO BE RELEVANT [9]

Category *	Citation of Document, [11] with indication, where appropriate, of the relevant passages [12]	Relevant to Claim No. [13]
Y	EP, A, 0224996 (KNOWLES) 10 June 1987 see the whole document	1,2
A	--	3
Y	EP, A, 0042946 (IBM) 6 January 1982 see figures 4-15,17; page 11, lines 3-13, last paragraph	1,2
A	--	3-10
A	FR, A, 2308116 (HOBART et al.) 12 November 1976 see figures 1-4; page 10, line 6 - page 17, line 23	1-10
	--	
A	EP, A, 0122126 (IKEDA et al.) 17 October 1984 see figures 4-9; page 8, line 21 - page 15, line 13	1,4-10
	--------	

* Special categories of cited documents: [10]

"A" document defining the general state of the art which is not considered to be of particular relevance

"E" earlier document but published on or after the international filing date

"L" document which may throw doubts on priority claim(s) or which is cited to establish the publication date of another citation or other special reason (as specified)

"O" document referring to an oral disclosure, use, exhibition or other means

"P" document published prior to the international filing date but later than the priority date claimed

"T" later document published after the international filing date or priority date and not in conflict with the application but cited to understand the principle or theory underlying the invention

"X" document of particular relevance; the claimed invention cannot be considered novel or cannot be considered to involve an inventive step

"Y" document of particular relevance; the claimed invention cannot be considered to involve an inventive step when the document is combined with one or more other such documents, such combination being obvious to a person skilled in the art.

"&" document member of the same patent family

IV. CERTIFICATION

Date of the Actual Completion of the International Search	Date of Mailing of this International Search Report
21st February 1989	29 MAR 1989
International Searching Authority	**Signature of Authorized Officer**
EUROPEAN PATENT OFFICE	P.C.G. VAN DER PUTTEN

Form PCT/ISA/210 (second sheet) (January 1985)

ANNEX TO THE INTERNATIONAL SEARCH REPORT ON INTERNATIONAL PATENT APPLICATION NO. US 8803713 SA 25486

This annex lists the patent family members relating to the patent documents cited in the above-mentioned international search report. The members are as contained in the European Patent Office EDP file on 13/03/89
The European Patent Office is in no way liable for these particulars which are merely given for the purpose of information.

Patent document cited in search report	Publication date	Patent family member(s)	Publication date
EP-A- 0224996	10-06-87	None	
EP-A- 0042946	06-01-82	CA-A- 1143194	22-03-83
		JP-A- 57044119	12-03-82
FR-A- 2308116	12-11-76	DE-A- 2615869	28-10-76
		US-A- 3995166	30-11-76
		JP-A- 51127623	06-11-76
EP-A- 0122126	17-10-84	AU-A- 2649484	11-10-84
		JP-A- 59187315	24-10-84
		US-A- 4647143	03-03-87
		CA-A- 1249148	24-01-89