Sept. 4, 1962 E. T. SNYDER 3,052,463

INSERTING MACHINE TO RECEIVE AND INSERT NEWSPAPERS DIRECTLY FROM A NEWSPAPER PRESS

Filed April 12, 1960 3 Sheets-Sheet 1

FIG. 1

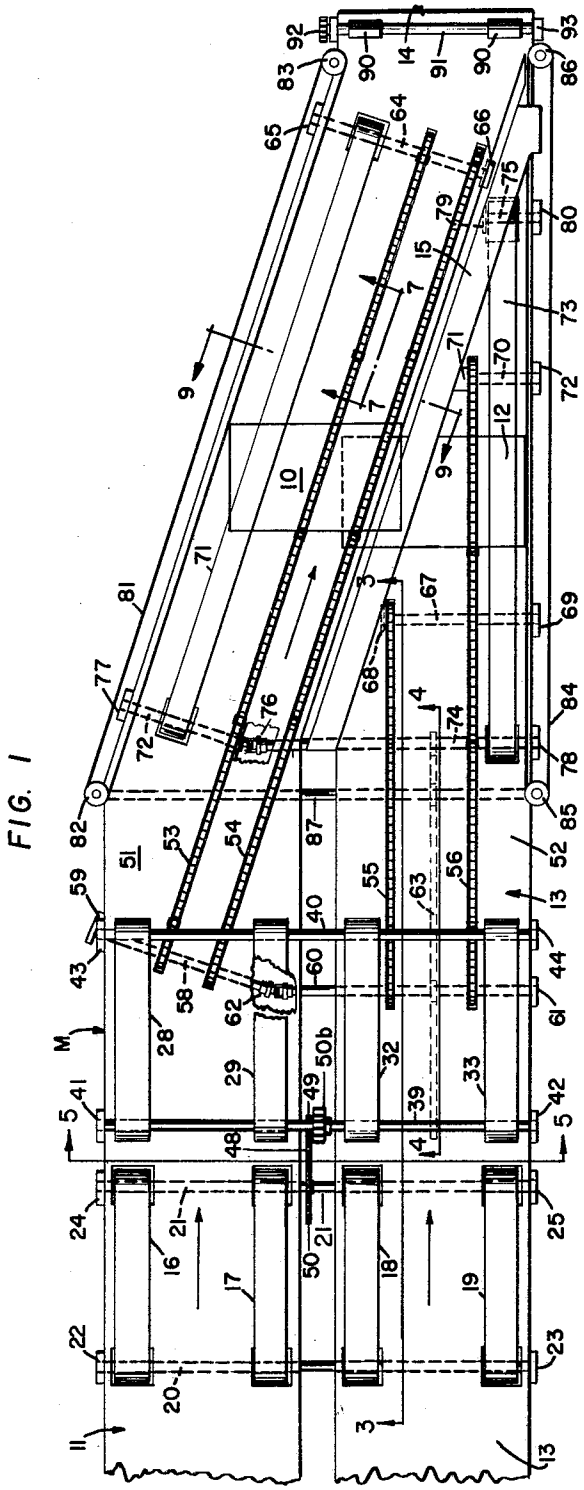

FIG. 2

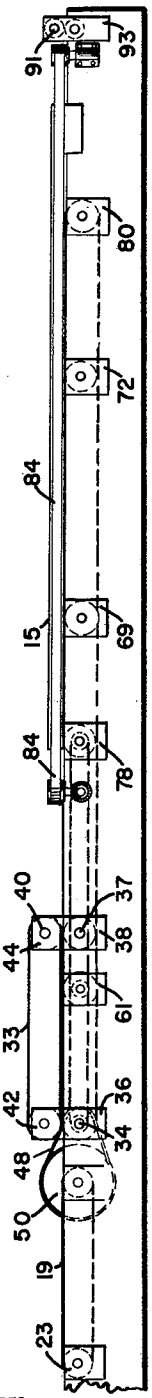

INVENTOR.

BY EUGENE T. SNYDER

Sept. 4, 1962 E. T. SNYDER 3,052,463

INSERTING MACHINE TO RECEIVE AND INSERT NEWSPAPERS DIRECTLY FROM A NEWSPAPER PRESS

Filed April 12, 1960 3 Sheets-Sheet 2

FIG. 3

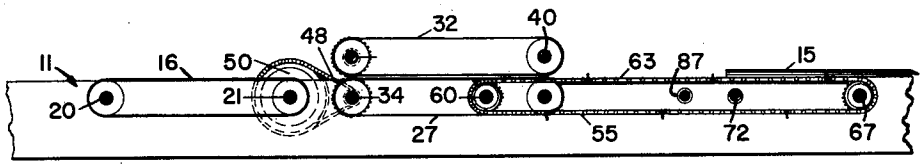

FIG. 4

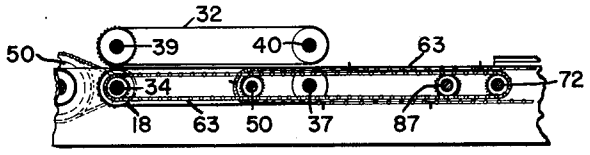

FIG. 5

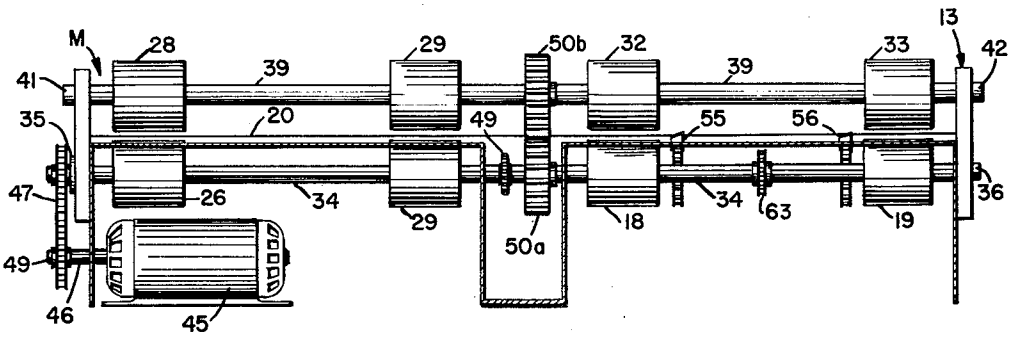

INVENTOR.

EUGENE T. SNYDER

BY

Sept. 4, 1962 E. T. SNYDER 3,052,463

INSERTING MACHINE TO RECEIVE AND INSERT NEWSPAPERS DIRECTLY FROM A NEWSPAPER PRESS

Filed April 12, 1960 3 Sheets-Sheet 3

FIG. 6

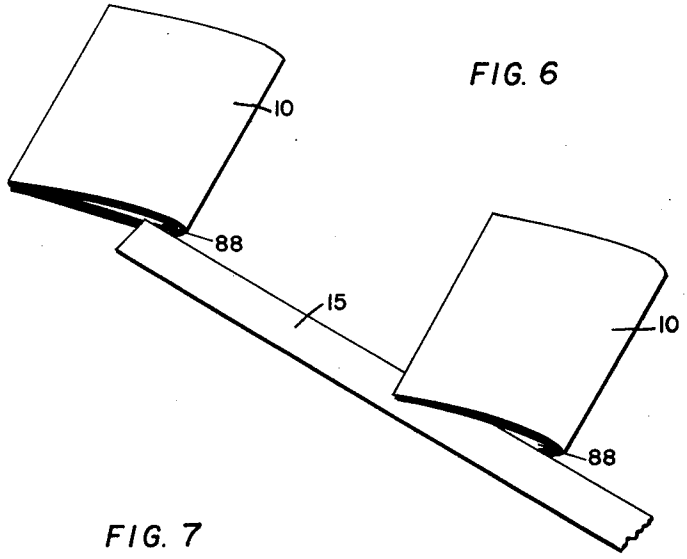

FIG. 7

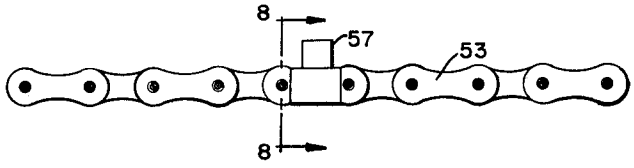

FIG. 8

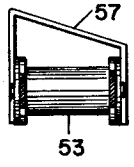

FIG. 9

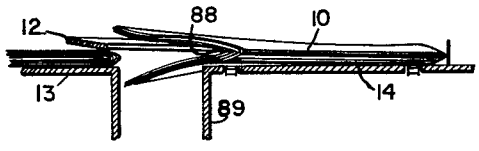

FIG. 10

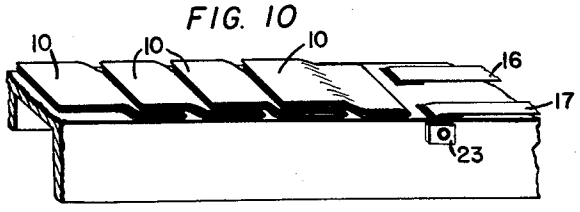

INVENTOR.
EUGENE T. SNYDER

BY

United States Patent Office 3,052,463 Patented Sept. 4, 1962

3,052,463

INSERTING MACHINE TO RECEIVE AND INSERT NEWSPAPERS DIRECTLY FROM A NEWSPAPER PRESS

Eugene Test Snyder, 1180 S. Yates, Denver, Colo.

Filed Apr. 12, 1960, Ser. No. 21,683
6 Claims. (Cl. 270—57)

This invention relates to improvements in newspaper inserting machines, more particularly a machine wherein a pre-run newspaper section may be inserted directly into another newspaper section as the other section comes off the press.

By present methods, it is necessary to pre-run both sections, stack them on movable platforms or hand trucks and store them for the length of time necessary until they can be inserted either by hand or machine. This method requires more manpower, storage space, and time than would be needed if the first pre-run section were inserted directly into the second section as the second section comes off the press.

Among the objects of the present invention is to provide an inserting machine which will function in unison with modern high speed newspaper presses to provide an inserting machine which will insert a pre-run newspaper section into another section as it comes off the press; to provide an inserting machine having a stationary opening strip which is engaged by a newspaper section as it comes off the press to cause the section to be opened for insertion of a pre-run section; and to provide an inserting machine having a first conveyor for pre-run sections and a second conveyor, for conveying sections from a printing press, which merges diagonally with the first conveyor and has a stationary opening strip along the line of merger which is engaged by a newspaper section as it comes off the press to cause the section to be opened for insertion of a pre-run section.

Additional objects and novel features will become apparent from the description which follows, taken in conjunction with the accompanying drawings, in which:

FIG. 1 is a top plan view of the inserting machine with parts broken away for clarity of illustration;

FIG. 2 is a side elevation of the inserting machine of FIG. 1;

FIG. 3 is a vertical section along line 3—3 of FIG. 1 showing the drive connections to the belts;

FIG. 4 is a vertical section along line 4—4 of FIG. 1 showing further details of the drive connections to the belts;

FIG. 5 is a vertical section along line 5—5 of FIG. 1 showing the motor for driving the conveyors;

FIG. 6 is a diagrammatic view showing how the outer newspaper section moves along the stationary opening strip;

FIG. 7 is a side elevation of a portion of a timing chain taken along line 7—7 of FIG. 1 showing a timing clip attached thereto;

FIG. 8 is an enlarged vertical section along line 8—8 of FIG. 7 showing the connection between the timing clip and a chain link;

FIG. 9 is an enlarged vertical section along line 9—9 of FIG. 1 showing one newspaper section being inserted in another newspaper section; and

FIG. 10 is a perspective view showing the overlapped condition of the newspaper sections as they come from the press prior to moving onto the conveyor of the inserting machine.

The outside and inside newspaper sections are carried by the belts to tables 51 and 52, respectively. At this point, the outside newspaper sections are caused to move inwardly and forwardly along diagonal conveyor 14, while

the inside newspaper sections move forwardly in timed relation to the diagonal movement of the outside sections. This movement will cause the outside sections to be separated by diagonal separating strip 15, so that the inside sections may be inserted therein, as described below.

The diagonal conveyor has a pair of spaced timing chains 53 and 54, which run longitudinally of the conveyor, as shown in FIG. 1, and extend across table 51 below the top surface thereof, while transfer conveyor 13 has a pair of timing chains 55 and 56 which extend from the rear portion of table 52, forwardly to the diagonal conveyor.

The newspaper sections must go through the inserting process individually and not in an overlapping condition, as shown in FIG. 10. Therefore, to accomplish separation, it is necessary to decrease the speed of belts 16, 17, 18 and 19 relative to belts 26, 27, 28 and 29 so that the faster belts will pick the sections from the slower belts so that they become longitudinally spaced. This decrease in speed of belts 16, 17, 18 and 19 is accomplished by transmitting power from shaft 34 to shaft 21 through endless chain 48 which extends between a small sprocket 49 on shaft 34 and a large sprocket 50 on shaft 21.

The upper or overhead belts 28, 29, 32 and 33 are provided to create sufficient pressure upon the newspaper sections between the overhead and lower belts to make positive contact with leading edge of each section in turn to separate them from the overlapped position shown in FIG. 10. Power is transmitted from shaft 34 to shaft 39 by gears 50*a* and 50*b* as seen in FIG. 5.

The outside and inside newspaper sections are carried by the belts to tables 51 and 52, respectively. At this point, the outside newspaper sections are caused to move inwardly and forwardly along diagonal conveyor 14 while the inside newspaper sections move forwardly in timed relation to the diagonal movement of the outside sections. This movement will cause the outside section to be separated by diagonal separating strip 15 so that the inside section may be inserted therein, as described below.

The diagonal conveyor has a pair of spaced timing chains 53 and 54, which run longitudinally of the conveyor, as shown in FIG. 1, and extend across table 51 below the top surface thereof, while transfer conveyor 13 has a pair of timing chains 55 and 56 which extend from the rear portion of table 52, forwardly to the diagonal conveyor. The timing chains have a plurality of timing clips, such as timing clip 57 on chain 53 as shown most clearly in FIG. 7, which extend above the table top level.

Chains 53 and 54 are driven from a rotatable shaft 58 extending diagonally across conveyor 11 and having one end mounted in a bearing 59, while chains 55 and 56 are driven from a rotatable shaft 60 having one end mounted in a bearing 61 and the other end connected to shaft 58 by a universal joint 62. Power is transmitted to the drive shafts by drive chain 63 extending between shaft 60 and shaft 34, as seen in FIG. 4. The forward ends of chains 53 and 54 are supported on a rotatable shaft 64 journaled in bearings 65 and 66. Similarly, the forward end of chain 55 is supported by a rotatable shaft 67 mounted in bearings 68 and 69, while the forward end of chain 56 is supported by a rotatable shaft 70 mounted in bearings 71 and 72.

The timing clips 57 make contact with the rear edge of each inside and outside newspaper section, a clip on each pair of chains engaging the edge of each section, which moves the sections forward in timed spaced relation. As the outside section 10 is moved forwardly it moves onto an endless belt 71 on diagonal conveyor 14 extending between a rotatable shaft 72 and 64. Similarly, as an inside section 12 is moved forwardly, it moves onto an endless belt 73 on transfer conveyor 13 which extends between a rotatable shaft 74 at the rear end of the belt and a shaft 75 at the

forward end of the belt. Shafts 72 and 74 are interconnected by a universal joint 76 and are driven from chain 63, as shown in FIG. 4. The outer end of shaft 72 is journaled in a bearing 77, while the outer end of shaft 74 is journaled in bearing 78. Shaft 75 is journaled in bearings 79 and 80.

The outside forward corner of outside newspaper section 10 engages an endless side belt 81 mounted between vertical pulleys 82 and 83 and the outside edge of the inside section 12 engages an endless side belt 84 extending between vertical pulleys 85 and 86. These side belts may conveniently be driven from a rotatable shaft 87, connected to shaft 34 through drive chain 63, which extends across the conveyors as shown in FIG. 1, and is connected to pulleys 85 and 86 by bevel gears or other suitable means (not shown). The timing clips 57, side belts 81 and 84 and conveyor belts 71 and 73 prevent the inside and outside newspaper sections, respectively, from turning as they will approach each other unturned, as seen in FIG. 1. It will be noted, however, that the outside sections are turned relative to conveyor 14 and to the direction in which they are being carried.

The angle of the outside sections on conveyor 14 permits stationary opening strip 15, positioned between the adjacent edges of conveyors 13 and 14, to open them. As diagrammatically illustrated in FIG. 6, opening strip 15 will be caused to enter opening 77 between the folded pages at the edge of the outside sections. Continued forward movement of the outside section along conveyor 14 carries the upper portion of the inside edge of each outside section over opening strip 15, as seen in dotted lines in FIG. 6. The upper edge will then slide along the top of the opening strip holding the section in a separated condition an inside section 12 slides into place, as shown in FIG. 1. From FIG. 9 it can be seen that the lower edge of the outside sections falls through a slot 89 between diagonal conveyor 14 and transfer conveyor 13 thereby further facilitating separation of the outside sections. Continuing forward movement along the conveyors forces the inside sections into the outside sections. Side belts 81 and 84 maintain their respective outside and inside sections in position on the belts, as described above, so that the sliding action between the sections may take place. Finally, the assembled sections are discharged from the end of conveyor 14, under rollers 90, which are mounted on a shaft 91 journaled in bearing blocks 92 and 93.

From the foregoing, it will be apparent that an inserting machine constructed in accordance with this invention fulfills to a marked degree the requirements and objects hereinbefore set forth. It can be seen that an inserting machine has been invented which will function in unison with high speed newspaper presses. The machine is constructed so that it will insert a pre-run newspaper section into another newspaper section as it comes off the press. This is accomplished by having a longitudinal conveyor for carrying the pre-run sections and another conveyor parallel to the transfer conveyor which will carry the newspaper sections from the printing press to a diagonal conveyor which converges with the transfer conveyor. At the intersection of the transfer conveyor and the diagonal conveyor is a stationary opening strip which is engaged by a newspaper section as it moves along the diagonal conveyor and causes the section to be opened for insertion of a pre-run section. A space or slot is provided between the meeting edges of the diagonal conveyor and the transfer conveyor which allows the lower edge of the newspaper to drop slightly to further facilitate inserting of the pre-run section. Furthermore, it will be understood that a number of applicant's novel inserting machines may be used in tandem, i.e., one after the other so that sections which come off of different presses may be inserted into each other one after another until the completed paper is finally assembled at the end of the press room.

Although a preferred embodiment of this invention has been illustrated and described, it will be understood that various changes and variations may be made without departing from the spirit and scope of this invention.

I claim:

1. An inserting machine comprising a receiving conveyor for carrying outside newspaper sections from a printing press; a transfer conveyor adjacent said receiving conveyor for carrying inside newspaper sections; a diagonal conveyor extending from the end of said receiving conveyor diagonally across the end of said transfer conveyor for bringing said outside sections into position to receive said inside sections; a stationary opening strip spaced above and extending along the intersection of said transfer and diagonal conveyors for opening said outside sections to receive said inside sections as they move along said diagonal conveyor; and motor means operatively connected to said receiving transfer, and diagonal conveyors for driving them.

2. An inserting machine as defined in claim 1, including a first pair of endless chains running longitudinally along said transfer conveyor, each said chain being operatively connected to said motor means and extending to the end of said transfer conveyor adjacent said diagonal conveyor; clips spaced along said chains for engaging the edge of said inside sections to move them forwardly into said outside sections; a second pair of endless chains running longitudinally along said diagonal conveyor and diagonally across the forward portion of said receiving conveyor, each said chain being operatively connected to said motor means; and clips spaced along said chains for engaging the edge of said outside sections to move them forwardly in timed sequence with said inside sections so that an outside section will always be in position to receive an inside section.

3. An inserting machine as defined in claim 2 including a first vertical side belt running longitudinally along the outside edge of the forward portion of said transfer conveyor adapted to engage the outside edge of said inside sections to hold them in position on said transfer conveyor as they are brought into engagement with said inside sections; and a second vertical side belt running longitudinally along the outside edge of said diagonal conveyor, adapted to engage the forward, outside corner of said outside sections to hold them in position on said diagonal conveyor as they receive said inside sections.

4. An inserting machine as defined in claim 2, wherein said side belts are operatively connected to said motor means.

5. An inserting machine as defined in claim 4, wherein said end of said transfer conveyor is separated from said diagonal conveyor forming a slot therebetween and below said opening strip so that the lower edge of said outer section will drop into said slot to facilitate insertion of said inner section in said outer section.

6. An inserting machine as defined in claim 5 including horizontal endless belts running longitudinally of each of said conveyors for carrying said newspaper sections, said belts being operatively connected to said motor means.

References Cited in the file of this patent

UNITED STATES PATENTS

2,279,269	Tornberg	Apr. 7, 1942
2,590,351	Russell	Mar. 25, 1952

UNITED STATES PATENT OFFICE

CERTIFICATE OF CORRECTION

Patent No. 3,052,463 September 4, 1962

Eugene Test Snyder

It is hereby certified that error appears in the above numbered patent requiring correction and that the said Letters Patent should read as corrected below.

Column 1, line 69, beginning with "The outside and" strike out all to and including "conveyor." in line 12, column 2, and insert instead, the following:

> Newly printed outside newspaper sections 10 are fed directly from a high speed newspaper printing press, via a newspaper conveyor, to a receiving conveyor 11 of the inserting machine M of Fig. 1 in a flat, overlaping condition shown in Fig. 10. The pre-run, inside sections 12 to be inserted into outside sections 10 are received by a transfer conveyor 13 in a flat, overlaping condition, similar to condition of the outside sections 10 received on conveyor 11, from a hopper and feeding mechanism which is not part of the present invention. These newspaper sections move from left to right on their respective conveyors, as viewed in Fig. 1, and when the outside sections 10 reach diagonal conveyor 14, they move inwardly and engage an opening strip 15 which separates the upper and lower portions thereof so that the inside sections may be received therein, as described below.
>
> The newly run, outside sections 10 are carried forward by spaced endless belts 16 and 17 on conveyor 11, while the pre-run, inside sections 12 are carried forwardly by spaced endless belts 18 and 19. These four belts are supported by a pair of spaced rotatable shafts 20 and 21 extending transversely of the conveyors, as shown in Fig. 1. Shaft 20 is journaled in bearings 22 and 23 on the outside of conveyors 11 and 13, respectively, while shaft 21 is journaled in bearings 24 and 25.
>
> After the newspaper sections are carried across their respective belts, they each pass between spaced pairs of belts. As seen in Fig. 5, the outside section passes between lower belts 26 and 27 and upper belts 28 and 29, while the inside sections pass between lower belts 30 and 31 and upper belts 32 and 33. Lower belts 26, 27, 30 and 31 are supported between rotatable shaft 34, shown extending across the conveyors in Fig. 5, journaled in bearings 35 and 36 on the outside of conveyor 11 and conveyor 13, respectively and a similar rotatable shaft 37 mounted forward of and parallel to

shaft 11 and journaled in a left bearing (not shown) and a right bearing 38. Similarly, upper belts 28, 29, 32 and 33 are supported between spaced rotatable shafts 39 and 40 extending across the conveyors. Shaft 39 is journaled in bearings 41 and 42 on the outside of conveyors 11 and 13, respectively, while shaft 40 is journaled in bearings 43 and 44.

Power for driving the belts is transmitted from motor 45 through drive shaft 46 which extends outwardly past the outer edge of conveyor 11, to shaft 34 by means of belt 47 extending therebetween. Power for all the other shafts and belts is taken from shaft 34 as will hereinafter appear.

column 4, line 51, for the claim reference numeral "2" read -- 3 --.

Signed and sealed this 24th day of December 1963.

(SEAL)
Attest:
ERNEST W. SWIDER

Attesting Officer

Acting EDWIN L. REYNOLDS
Commissioner of Patents