R. A. COWELL.

Improvement in Earth-Closets.

No. 115,580. Patented June 6, 1871.

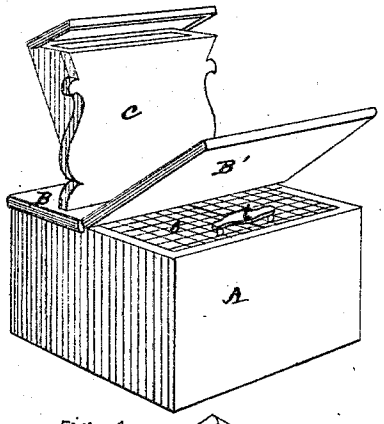

Fig 1

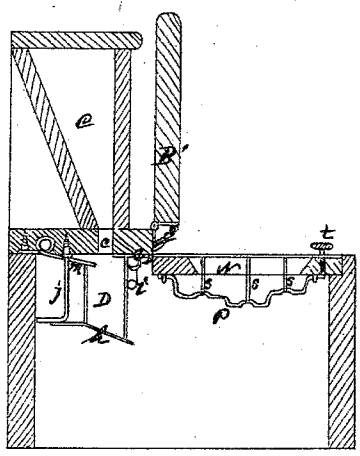

Fig 2

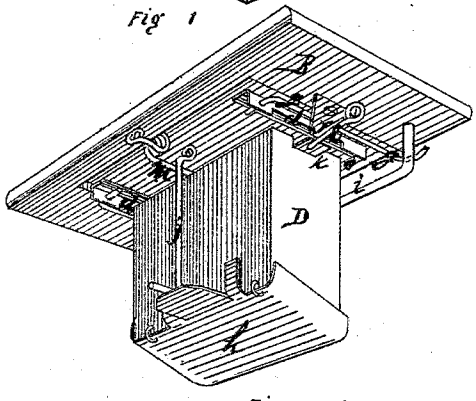

Fig 3.

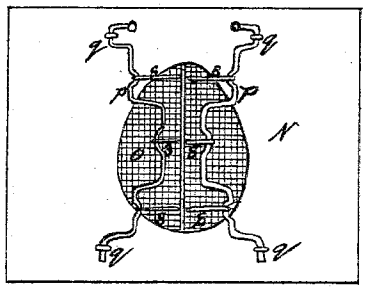

Fig 4.

Witness.
Geo. W. Tibbitts
J. K. Mountcastle

Inventor
R. A. Cowell

AM. PHOTO-LITHOGRAPHIC CO. N.Y. (OSBORNE'S PROCESS.)

UNITED STATES PATENT OFFICE.

RENSSELAER A. COWELL, OF CLEVELAND, OHIO.

IMPROVEMENT IN EARTH-CLOSETS.

Specification forming part of Letters Patent No. 115,580, dated June 6, 1871.

I, RENSSELAER A. COWELL, of Cleveland, in the county of Cuyahoga and State of Ohio, have invented a new and Improved Commode or Earth-Closet, of which the following is a specification:

This invention relates to certain improvements in the construction of dry-earth closets, in which a hopper for containing the dry earth is arranged to discharge a given quantity of earth into a supplementary chamber below it, and from thence it is discharged into the excrement-vessel, completely covering the fecal matter therein, the devices for operating the commode being attached to the lid covering the seat. The invention further relates to a method of upholstering the seat, by which the cushion covering the seat may be opened by the weight of the person on the seat, and when the weight is removed the same closes up again.

In the drawing, Figure 1 is a perspective view. Fig. 2 is a vertical half-section. Fig. 3 is a detached perspective view of the supplementary chamber and the devices for operating the same. Fig. 4 is an under-side view of the seat.

A represents a square box, of suitable dimensions, having a top and lid, B and B′. Standing on the top B is a movable hopper, C, which also forms a back to the seat. Through the top B, and communicating with the hopper C, is an opening, *c*, for conducting the earth to the supplementary chamber below. This chamber consists of a metal box, D, of a capacity to contain about a quart of dry earth; it is suspended at the front upper corner by a hinge or hinges to a sliding plate, *e*, which has guides *d d* attached to each end, said guides being held by a lug, *f*, screwed to the under side of the top board B. A wire, *g*, connects the slides *d d* with the lid B′, the motion of the lid up and down carrying the slide *e*, with the chamber D attached, back and forth, alternately opening the passage *c*. The bottom of the chamber D consists of a door, *h*, hinged to the rear side by rings or loops, and will hang downward, forming a chute from the open bottom of the chamber when the lid B′ is down, and the box D then swings on its hinges.

When the lid B′ is thrown upward the slide *e*, with the chamber D, is drawn forward, and the chamber D, striking against a rod, *i*, attached to the board B, brings the chamber into a perpendicular position directly under the throat *c* of the hopper, and, opening the throat *c*, the earth will fall into the chamber D. At the same time that the chamber D is thrown forward the bottom is carried backward sufficient to cause a projecting arm on the door *h* to strike against a rod, *j*, which closes the door and holds the earth in the chamber until the lid B′ is thrown down again. To deposit the earth from the chamber D into the excrement-vessel the lid B′ is thrown down, which carries the slide *e* and chamber D backward, the slide covering the throat; but the chamber D is still held in a perpendicular position by ears *k*, one on each side, which slide on projecting rods *l* until the chamber is nearly back to its rear position, when the ears slip off from the rods *l* and the chamber is released from them so it will swing, and a spring, *m*, bearing on the back top edge, gives it a throw and jars it so as to scatter the earth well into the excrement-vessel. The door *h* is, of course, thrown open at the same time the chamber swings, and when open the door acts as a chute and assists in directing the discharge of earth. N is a seat, which can be removed, which enables the vessel to be lifted out. The seat is provided with a covering, *o*, of knitted worsted or other suitable material, divided through the center from front to back, so that it can be opened. On the under side of the seat are fixed two wire arms, *p p*, bent in the form seen in Figs. 2 and 4, and which turn in staples *q q* in the seat N. Cords *s s* connect the cushion at the edges with the arms *p p*, by which the cushion is drawn open.

To operate the arms *p p* the front ends of them are bent toward one another in the form of cranks, which are connected to the arms of a bar, *t*, which bar, when pressed upon from above, spreads the arms *p p* apart, and the cords, drawing on the cushion, open it apart, and making an opening in the seat; when the pressure is taken off from the bar *t* the cushion closes up again, the cushion being made of an elastic material.

This cushion renders the seat more comfortable, and also prevents dust from rising and getting onto the seat. It is also intended to have it removable, so that when it becomes soiled or dirtied a clean one may be put on in the place.

I claim—

1. In combination with the chamber D, the slide *e*, guides *d*, lugs *f*, ears *k*, rods *l*, spring *m*, rod *i*, and rods *g*, when arranged and operating as shown, and for the purpose set forth.

2. In combination with the chamber D, the door or chute *h* and rod *j*, as and for the purpose set forth.

3. In combination with the seat N, the elastic cushion *o*, arms *p p*, cords *s s*, and bar *t*, when constructed, arranged, and operating as shown, and for the purpose set forth.

R. A. COWELL.

Witnesses:

J. M. HENDERSON,

GEO. W. TIBBITTS.