H. A. DOUGLAS.

CIRCUIT CONTINUING DEVICE.

APPLICATION FILED AUG. 15, 1918. RENEWED JAN. 19, 1920.

1,348,395. Patented Aug. 3, 1920.

2 SHEETS—SHEET 1.

Fig. 1.

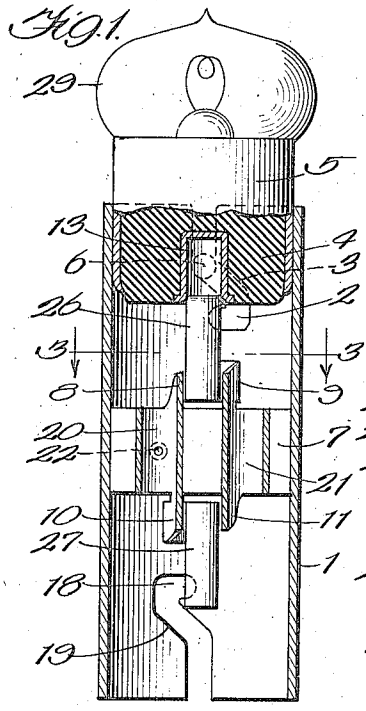

Fig. 2.

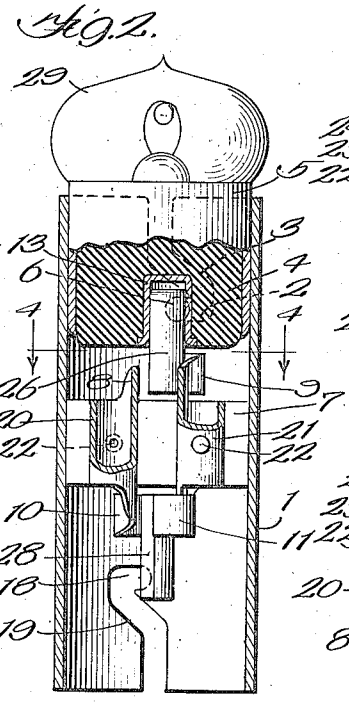

Fig. 3.

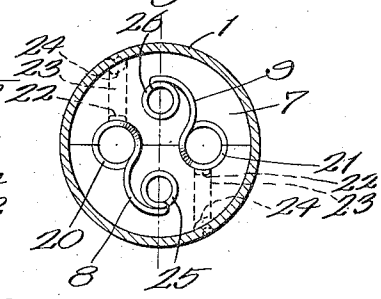

Fig. 4.

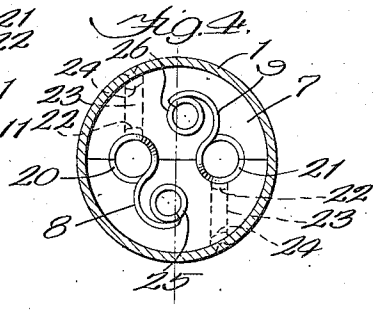

Fig. 5.

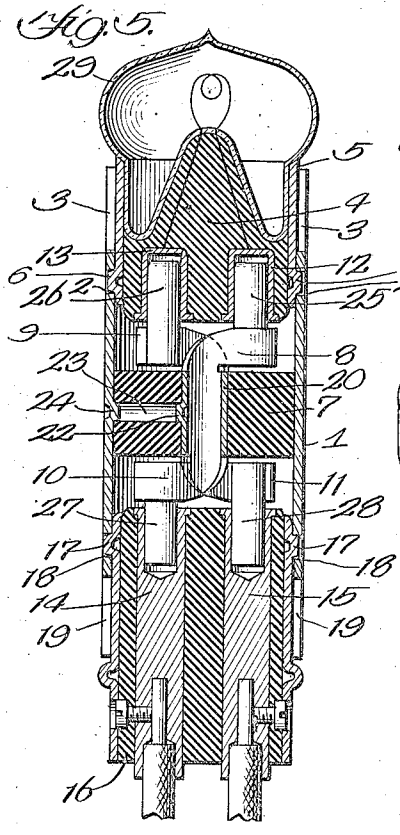

Fig. 6.

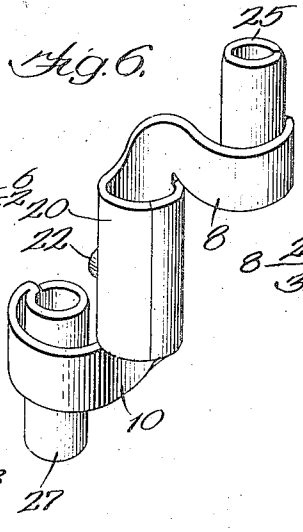

Fig. 7.

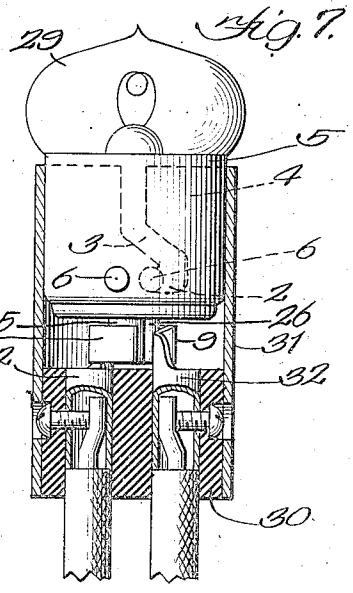

Inventor:
Harry A. Douglas.
By A. L. Gragg Atty.

H. A. DOUGLAS.

CIRCUIT CONTINUING DEVICE.

APPLICATION FILED AUG. 15, 1918. RENEWED JAN. 19, 1920.

1,348,395. Patented Aug. 3, 1920.

2 SHEETS—SHEET 2.

Fig. 8.

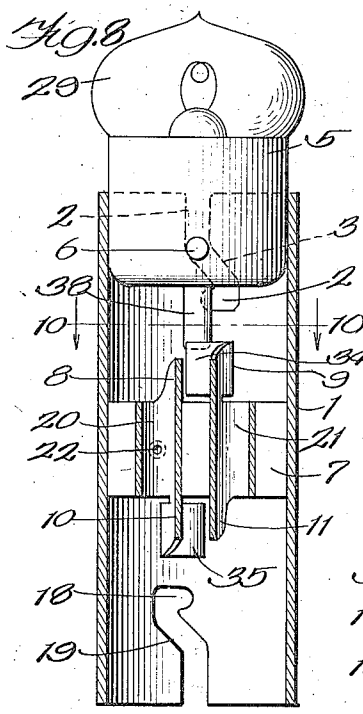

Fig. 9.

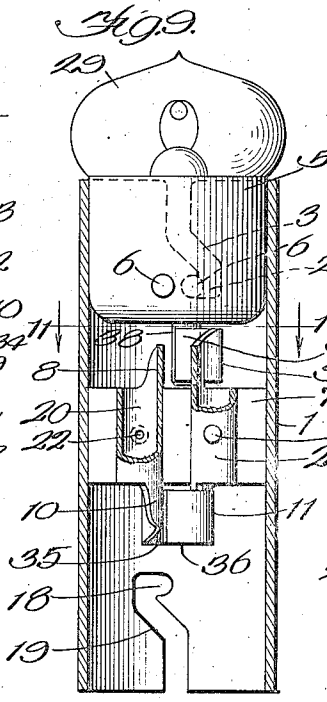

Fig. 10.

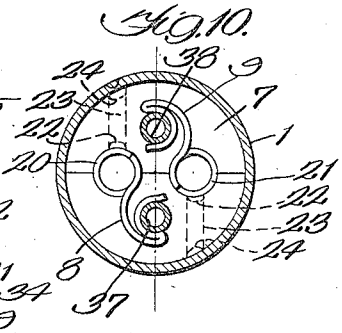

Fig. 11.

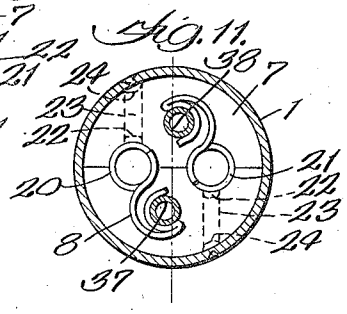

Fig. 12.

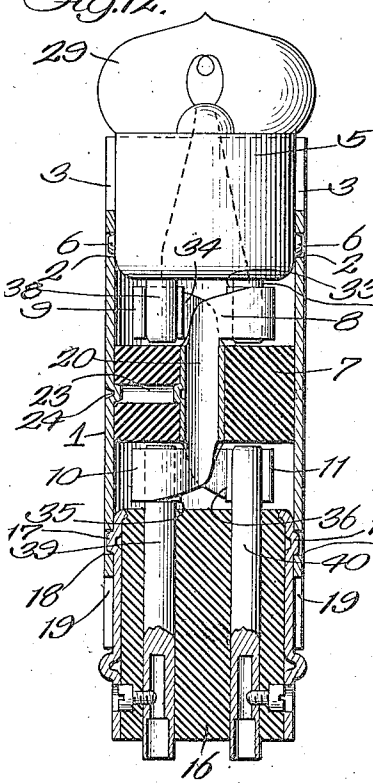

Fig. 13.

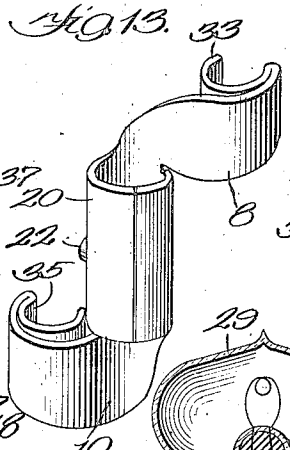

Fig. 14.

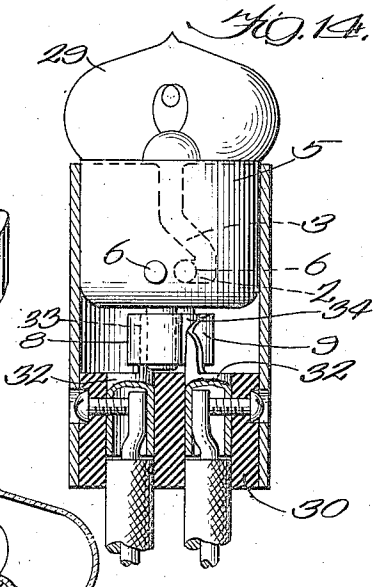

Fig. 15.

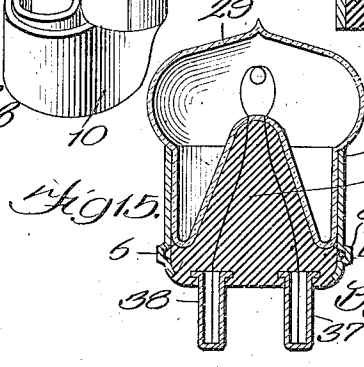

Inventor:
Harry A. Douglas.
By G. L. Gregg
Atty.

UNITED STATES PATENT OFFICE.

HARRY A. DOUGLAS, OF BRONSON, MICHIGAN.

CIRCUIT-CONTINUING DEVICE.

1,348,395. Specification of Letters Patent. Patented Aug. 3, 1920.

Application filed August 15, 1918, Serial No. 250,020. Renewed January 19, 1920. Serial No. 352,637.

To all whom it may concern:

Be it known that I, HARRY A. DOUGLAS, citizen of the United States, residing at Bronson, in the county of Branch and State of Michigan, have invented a certain new and useful Improvement in Circuit-Continuing Devices, of which the following is a full, clear, concise, and exact description.

My invention relates to circuit continuing devices employing sockets and contact carriers which are in rotative engagement. In devices of this class the sockets and contact carriers usually are in bayonet pin or projection and channel connection whereby the contact carriers may be moved outwardly to open circuits and inwardly and rotatively to establish circuits or join circuit sections, the outer margin of the transverse branch of a bayonet channel and the corresponding bayonet projection constituting holding formations which are engaged when the contact carrier thus equipped is in its inner position and has been turned to hold the parts in assembly. In such devices the inward movement of the contact carrier and the subsequent rotative movement thereof are both manually effected, the extent of the rotative movement being determined solely by the manipulator.

In accordance with one feature of my invention spring mechanism is employed for effecting or promoting the desired relative turning movement of the socket and carrier to insure the full turning movement of the carrier with respect to the socket.

In circuit continuing devices it is common to employ contacts which are longitudinally pressed upon by coiled springs to effect and maintain the desired mechanical and electrical assembly. It is another object of my invention to eliminate the coiled springs thereby to simplify the construction. I have been able to achieve both objects of my invention by making one of the contacts of a circuit continuing device in the form of a leaf spring disposed to press transversely of the socket upon the complemental contact, one of these contacts being upon the socket and the other upon the rotatable contact carrier within the socket, the leaf spring contact effecting rotative movement of the carrier when in its inner position. If the carrier has a bayonet pin and the socket has a bayonet channel, this leaf spring will exert pressure upon the bayonet pin effecting or promoting movement thereof along the transverse portion of such bayonet channel when the contact carrier is in its inner position. Not only does such a leaf spring serve positively to maintain the parts in firm mechanical assembly, but it also effects very good circuit connection since the spring rubs upon the contact complemental thereto in performing its function whereby the engaging circuit establishing or continuing contact portions are maintained bright and clean.

I will explain my invention more fully by reference to the accompanying drawings showing the preferred embodiments thereof and in which Figure 1 is a view, mainly in section of a circuit continuing device employing a shell adapted for coupling engagement at each of its ends with a contact carrier, the contact carrier at the forward end of the shell being shown partially inserted therein; Fig. 2 is a view similar to Fig. 1 with the contact carrier at the forward end of the shell fully inserted; Fig. 3 is a sectional view on line 3—3 of Fig. 1; Fig. 4 is a sectional view on line 4—4 of Fig. 2; Fig. 5 is a longitudinal sectional view of the structure shown in Fig. 1, taken on a plane at right angles to the plane on which Fig. 1 is taken and showing a second contact carrier coupled with the rear end of the shell; Fig. 6 is a perspective view of the leaf spring contact structure which I preferably employ; Fig. 7 shows a so-called lamp socket comprising a shell and a rear contact carrier in permanent assembly therewith coöperating directly with the contact carrier at the front end of the shell, this structure employing a modification of the leaf spring structure shown in Fig. 6; Fig. 8 is a view of another form, mainly in section, but with the contact carrier at the forward end of the shell in full elevation, the contact carrier at the front end of the shell being partially inserted therein; Fig. 9 is a view similar to Fig. 8 excepting that the front contact carrier is shown as being fully inserted within the shell; Fig. 10 is a view on line 10—10 of Fig. 8; Fig. 11 is a view on line 11—11 of Fig. 9; Fig. 12 is a longitudinal sectional view of the structure shown in Fig. 8 taken on a plane at right angles to the plane on which Fig. 8 is taken and showing a second contact carrier coupled with the rear end of the shell; Fig. 13 is a perspective view of the leaf spring contact structure shown

in Figs. 8 to 12 inclusive; Fig. 14 shows a so-called lamp socket comprising a shell and a rear contact carrier in permanent assembly therewith coöperating directly with the contact carrier at the front end of the shell, this structure employing a modification of the leaf spring structure shown in Fig. 13; and Fig. 15 is a sectional view illustrating the form of contact carrier that is shown in Figs. 8 to 14 inclusive that is upon the front end of the shell.

Like parts are indicated by similar characters of reference throughout the different figures.

In the different forms of the invention illustrated there is employed a cylindrical shell 1 which is preferably metallic. This shell is formed at its forward end preferably with two diametrically opposite bayonet channels each having an inner transverse portion 2 and a portion 3 leading from the outer end of the channel to said inner or transverse channel portion and sloping inwardly away from the inner termination of the bayonet channel—the semi-circular end of the channel portion 2. The cylindrical contact carrier 4 formed of insulating material happens to be surrounded by a metallic sheath 5. This contact carrier is surrounded by the shell 1 and is movable in and out and is movable rotatively when diametrically alined bayonet pins or projections 6 project from the contact carrier 4 and are receivable in the aforesaid bayonet channels.

In the form of the invention shown in Figs. 1 to 5 inclusive, a second contact carrier 7, also cylindrical and made of insulating material, is permanently assembled with the shell within an intermediate portion thereof, this contact carrier being desirably formed into halves which meet on a plane containing the axis of the shell. Leaf spring contacts 8, 9 are carried by the contact carrier 7 on the front side thereof and leaf spring contacts 10 and 11 are carried by the contact carrier 7 on the rear side thereof. The leaf spring contacts 8 and 9 are adapted respectively to engage the contacts 12 and 13 upon the contact carrier 4. The leaf spring contacts 10 and 11 are adapted respectively to engage the contacts 14 and 15 upon the contact carrier 16 which happens to be in the nature of a connecting plug provided with diametrically opposite bayonet pins or projections 17 receivable in bayonet channels at the rear end of the shell 1, these bayonet channels, similarly to the bayonet channels at the forward end of the shell, each having an inner transverse portion 18 and an outer portion 19 leading to said inner or transverse channel portion 18 and sloping inwardly away from the inner termination of the bayonet channel—the semi-circular end of the channel portion 18. The contact carrier 7 is thus provided with leaf spring contacts upon each end thereof. The contacts upon the inner ends of the contact carriers at the ends of the shell have similar coöperation with the leaf spring contacts upon the opposing ends of the contact carrier 7 and it will therefore suffice specifically to describe the interrelation and interaction of the contacts upon the inner end of the contact carrier 4 and the opposed end of the contact carrier 7. When the bayonet projections 6 are in the outer longitudinal portions of the bayonet channels at the front ends of the shell 1 the contacts 12 and 13 may be directed into initial engagement with the contacts 8 and 9 but when these bayonet projections reach the sloping portions of the bayonet channels the contacts 12 and 13 engage the contacts 8 and 9 in a manner to deflect them laterally from the idle positions initially occupied thereby whereby these contact springs 8 and 9 exert pressure transversely of the shell upon said contacts 12 and 13 and coöperate therewith in a manner to force rotation of the contact carrier 4 when the bayonet projections 6 come into register with the transverse portions 2 of the forward bayonet channels. These bayonet projections 6 then engage the forward or outer margins of the transverse channel portions 2. Said projections and channel margins act as holding formations which are brought into engagement by the action of the springs 8 and 9 to prevent outward or withdrawing movement of the contact carrier 4, the holding formations 6 being adjustable to engaging positions inwardly of the holding formations afforded by said outer margins of said bayonet channel portions by means of said springs. Hitherto the contact carrier was twisted by hand until the bayonet pins or projections were brought to holding position, it being believed that I am the first to provide spring mechanism for accomplishing this result.

In the form of the invention shown in Figs. 1 to 6 inclusive and Figs. 8 to 13 inclusive the spring contacts 8 and 10 are formed in one piece and the spring contacts 9 and 11 are formed in another piece, the contacts 8 and 10 being joined by a cylindrical leaf portion 20 while the contacts 9 and 11 are joined by a cylindrical leaf portion 21, these cylindrical portions being embraced between the halves of the contact carrier 7 that are suitably held in rigid relation to the shell 1. The conductors that lead from a suitable source of current and which are connected with the contacts 14 and 15 of the plug 16 are brought into circuit extending connection with the contacts 12 and 13 upon the contact carrier 4 since the contacts 8 and 10 are connected through the cylindrical portion 20 and the contacts 9 and 11 are connected with the cylindrical portion 21, the contacts 8 and 9 being upon one side of the

carrier 7 while the contacts 10 and 11 are upon the other side of such carrier. The contacts are held from rotation with respect to the carrier 7 by means of the lugs 22 projecting from the cylindrical portions 20 21 into the recesses 23 in the carrier 7 and into which recesses the lugs 24 upon the shell 7 are desirably extended to hold the carrier in fixed relation with respect to said shell.

Referring more particularly to the structure shown in Figs. 1 to 6 inclusive the metallic contacts 12 and 13 are in the form of sockets which are adapted to receive the engaging ends of the contact springs 8 and 9 that are curled into plugs 25, 26. The contacts 14 and 15 are also in the form of sockets which are adapted to receive the engaged ends of the contact springs 10 and 11 that are curled into plugs 27, 28. When the bayonet projections upon the contact carriers 4 and 16 are in the outer portions of the bayonet channels corresponding thereto, the contact sockets upon these contact carriers are respectively in alinement with the complemental contact plugs 25, 26, 27 and 28, each contact plug 25, etc., and its complemental socket 12, etc., being co-axial or in alinement when the corresponding contact carrier is in its outer position. As an outer contact carrier is moved inward the contacts carried thereby are thus readily brought into initial engagement with the complemental contacts upon the adjacent end of the intermediate contact carrier 7. However, as the bayonet projections upon such outer contact carrier are moved farther inwardly they will encounter the sloping portions of the corresponding bayonet channels thereby to press the engaged contacts upon the carrier 7 transversely of the shell from their normal positions. The upright dot and dash line in Fig. 3 illustrates the plane occupied by the transverse centers or axes of the plug portions 25 and 26 when not engaged by the socket contacts 12 and 13, it being understood that the transverse axes of these plug portions 25 and 26 are then co-incident with the transverse axes of said sockets. When the bayonet projections come into register with the inner transverse portions of the corresponding bayonet channels, the contact springs move such projections against the semi-circular ends of these transverse channel portions, the rotatable mounting of the contact carrier having these bayonet projections permitting this action. These semi-circular ends of the transverse portions of the corresponding bayonet channels, that is the inner ends of the bayonet channels, terminate short of alinement with the entrance portions of such channels, being so located that the contact springs cannot bring the bayonet projections into full alinement with their initial entering positions but arrest these projections wherefore the contact springs hold such projections firmly against the bayonet seats that are constituted by said semi-circular inner ends of the bayonet channels.

Fig. 4 illustrates the positions assumed by the contact springs in moving the bayonet projections against their bayonet seats, it being observed that the contact plugs 25 and 26 have not reached their idle positions shown in Fig. 3. The vertical dot and dash lines in Figs. 3 and 4 may also represent the positions of the outer ends of the bayonet channels, the contact springs being disposed to press upon the complemental contacts upon the complemental carrier in directions toward the outer portions of the bayonet channels and transversely of the shell when the bayonet projections are in the sloping portions and the inner transverse portions of the bayonet channels. It will be observed also that when the sockets upon the contact carriers and the contact plugs upon the contact springs are brought into engagement and removed from engagement, said contacts are rubbed against each other to make their engaging surfaces bright and clean to insure good conductivity.

In the form of the invention illustrated in Figs. 1 to 5 inclusive the contact carrier 4 happens to be the base of an incandescent lamp 29 but the invention is not to be limited to this characteristic.

In the form of the invention illustrated in Fig. 7 the contact carrier 30 is at the rear end of shell 31. Most of the parts of the structure shown in this figure are similar to parts shown in Figs. 1 to 6 inclusive and similar parts are given similar characters of reference. In Fig. 7 the cylindrical portions 32 are passed through openings formed in the carrier 30 which need not be split since there are no contact springs 10 and 11 upon the rear side of the carrier 30. The circuit continuing devices illustrated are so-called two pole devices but to which the invention is not to be limited. In order that the best action may be secured all of the engaging portions of the contacts are located each upon one side of the axis of the cylindrical shell and the three cylindrical contact carriers co-axial with the socket shell. The structure shown in Figs. 1, 2 and 5 is a form of double socket and plug arrangement, the intermediate contact carrier 7 and the shell 1 forming the double socket. The form shown in Fig. 7 is a single socket structure, the shell 31 then being adapted to receive only the one movable contact carrier.

In the forms of the invention shown in Figs. 8 to 15 inclusive most of the parts are similar to the parts shown in Figs. 1 to 7 inclusive and similar parts are given similar characters of reference. Contacting sockets 33, 34, 35 and 36 upon the contact springs 8, 9, 10 and 11 replace the contact plugs 25,

etc., while contact plugs 37, 38, 39 and 40 replace the contacting sockets 12, 13, 14 and 15, the construction of Figs. 8 to 15 inclusive being in these respects a reversal of the construction shown in Figs. 1 to 7 inclusive, the co-action of the contacting plugs and sockets however being similar in both cases.

While I have herein shown and particularly described the preferred embodiment of my invention I do not wish to be limited to the precise details of construction shown as changes may readily be made without departing from the spirit of my invention, but having thus described my invention I claim as new and desire to secure by Letters Patent the following:—

1. A circuit continuing device including a shell; a contact carrier surrounded by the shell and having bayonet projection and channel connection therewith, a portion of the bayonet channel leading to the inner or transverse portion sloping inwardly away from the inner termination of the bayonet channel; a second contact carrier connected with the shell; and contacts upon the adjacent ends of said carriers, a contact upon one carrier being in the form of a leaf spring disposed to press toward the outer portion of the bayonet channel and transversely of the shell upon the complemental contact upon the other carrier when the bayonet projection is in the sloping portion and the transverse portion of the bayonet channel.

2. A circuit continuing device including a shell; a contact carrier surrounded by the shell and movable in and out and rotatively when in an inner position, said contact carrier and shell having engageable holding formations, the holding formation upon said contact carrier being adjustable to engaging position inwardly of the holding formation upon the shell when said contact carrier is turned while in an inner position to obstruct outward movement of said carrier; a second contact carrier connected with the shell, and contacts upon the adjacent ends of said carriers, a contact upon one carrier being in the form of a leaf spring disposed to press transversely of the shell upon the complemental contact upon the other carrier and on one side of the axis of the rotatable contact carrier when said movable carrier is in its said inner position in a direction to engage said holding formations.

3. A circuit continuing device including a shell; a contact carrier surrounded by the shell and having bayonet projection and channel connection therewith, a portion of the bayonet channel leading to the inner or transverse portion sloping inwardly away from the inner termination of the bayonet channel; a second contact carrier connected with the shell; and contacts upon the adjacent ends of said carriers, a contact upon one carrier being in the form of a socket and the contact upon the other carrier being in the form of a leaf spring carrying a plug for entering said socket, said plug and socket being substantially in alinement when said movable contact carrier is in outer position, said spring being disposed to press toward the outer portion of the bayonet channel and transversely of the shell upon the complemental contact upon the other carrier when the bayonet projection is in the sloping portion and the transverse portion of the bayonet channel.

4. A circuit continuing device including a shell; a contact carrier surrounded by the shell and movable in and out and rotatively when in an inner position, said contact carrier and shell having engageable holding formations, the holding formation upon said contact carrier being adjustable to engaging position inwardly of the holding formation upon the shell when said contact carrier is turned while in an inner position to obstruct outward movement of said carrier; a second contact carrier connected with the shell; and contacts upon the adjacent ends of said carriers, a contact upon one carrier being in the form of a socket and the contact upon the other carrier being in the form of a leaf spring carrying a plug for entering said socket, said plug and socket being substantially in alinement when said movable contact carrier is in outer position, said spring being disposed to press transversely of the shell upon the complemental contact upon the other carrier and on one side of the axis of the rotatable contact carrier when said movable carrier is in its said inner position in a direction to engage said holding formations.

5. A circuit continuing device including a shell; a contact carrier surrounded by the shell and having bayonet projection and channel connection therewith, a portion of the bayonet channel leading to the inner or transverse portion sloping inwardly away from the inner termination of the bayonet channel; a second contact carrier connected with the shell; and contacts upon the adjacent ends of said carriers, a contact upon one carrier being in the form of a leaf spring disposed to press toward the outer portion of the bayonet channel and transversely of the shell upon the complemental contact upon the other carrier when the bayonet projection is in the sloping portion and the transverse portion of the bayonet channel, one of said contacts being in the form of a socket and the other having a plug portion for entering said socket, said plug and socket contact elements being substantially in alinement when said movable contact carrier is in outer position.

6. A circuit continuing device including a shell; a contact carrier surrounded by the

shell and movable in and out and rotatively when in an inner position, said contact carrier and shell having engageable holding formations, the holding formation upon said contact carrier being adjustable to engaging position inwardly of the holding formation upon the shell when said contact carrier is turned while in an inner position to obstruct outward movement of said carrier; a second contact carrier connected with the shell; and contacts upon the adjacent ends of said carriers, a contact upon one carrier being in the form of a leaf spring disposed to press transversely of the shell upon the complemental contact upon the other carrier and on one side of the axis of the rotatable contact carrier when said movable carrier is in its said inner position in a direction to engage said holding formations, one of said contacts being in the form of a socket and the other having a plug portion for entering said socket, said plug and socket contact elements being substantially in alinement when said movable contact carrier is in outer position.

7. A circuit continuing device including a cylindrical shell; a cylindrical contact carrier surrounded by the shell and movable in and out and rotatively when in an inner position, said contact carrier and shell having engageable holding formations, the holding formation upon said contact carrier being adjustable to engaging position inwardly of the holding formation upon the shell when said contact carrier is turned while in an inner position to obstruct outward movement of said carrier; a second contact carrier connected with the shell; and contacts upon the adjacent ends of said carriers and located upon one side of the axis of the cylindrical shell, a contact upon one carrier being in the form of a leaf spring disposed to press transversely of the shell upon the complemental contact upon the other carrier and on one side of the axis of the rotatable contact carrier when said movable carrier is in its said inner position in a direction to engage said holding formations.

8. A circuit continuing device including a cylindrical shell; a cylindrical contact carrier surrounded by the shell and movable in and out and rotatively when in an inner position, said contact carrier and shell having engageable holding formations, the holding formation upon said contact carrier being adjustable to engaging position inwardly of the holding formation upon the shell when said contact carrier is turned while in an inner position to obstruct outward movement of said carrier; a second contact carrier connected with the shell; and contacts upon the adjacent ends of said carriers and located upon one side of the axis of the cylindrical shell, a contact upon one carrier being in the form of a leaf spring disposed to press transversely of the shell upon the complemental contact upon the other carrier and on one side of the axis of the rotatable contact carrier when said movable carrier is in its said inner position in a direction to engage said holding formations, one of said contacts having a socket and the other having a plug portion for entering said socket, said plug and socket contact elements being substantially in alinement when said movable contact carrier is in outer position.

9. A circuit continuing device including a cylindrical shell; a cylindrical contact carrier surrounded by the shell and having bayonet projection and channel connection therewith, a portion of the bayonet channel leading to the inner or transverse portion sloping inwardly away from the inner termination of the bayonet channel; a second contact carrier connected with the shell; and contacts upon the adjacent ends of said carriers and located upon one side of the axis of the cylindrical shell, a contact upon one carrier being in the form of a leaf spring disposed to press toward the outer portion of the bayonet channel and transversely of the shell upon the complemental contact upon the other carrier when the bayonet projection is in the sloping portion and the transverse portion of the bayonet channel, the transverse portion of the bayonet channel terminating short of alinement with the outer portion of such channel to constitute a bayonet seat against which the bayonet projection is pressed by the lateral pressure of the spring contact, when said movable contact carrier is in its inner position.

10. A circuit continuing device including a cylindrical shell; a cylindrical contact carrier surrounded by the shell and having bayonet projection and channel connection therewith, a portion of the bayonet channel leading to the inner or transverse portion sloping inwardly away from the inner termination of the bayonet channel; a second contact carrier connected with the shell; and contacts upon the adjacent ends of said carriers and located upon one side of the axis of the cylindrical shell, a contact upon one carrier being in the form of a leaf spring disposed to press toward the outer portion of the bayonet channel and transversely of the shell upon the complemental contact upon the other carrier when the bayonet projection is in the sloping portion and the transverse portion of the bayonet channel, one of said contacts being in the form of a socket and the other having a plug portion for entering said socket, said plug and socket contact elements being substantially in alinement when said movable contact carrier is in outer position, the transverse portion of the bayonet channel terminating short of alinement with the outer portion of such channel to constitute a bayonet seat against which the bayonet projection is pressed by

the lateral pressure of the spring contact, when said movable contact carrier is in its inner position.

11. A circuit continuing device including a cylindrical shell; a cylindrical contact carrier surrounded by the shell and having bayonet projection and channel connection therewith; a second contact carrier connected with the shell; and contacts upon the adjacent ends of said carriers and located upon one side of the axis of the cylindrical shell, a contact upon one carrier being in the form of a leaf spring disposed to press transversely of the shell upon the complemental contact upon the other carrier when said movable carrier is in its inner position in a direction to bring the bayonet projection to position in the transverse portion of the bayonet channel, one of said contacts being in the form of a socket and the other having a plug portion for entering said socket, said plug and socket contact elements being substantially in alinement when said movable contact carrier is in outer position, the transverse portion of the bayonet channel terminating short of alinement with the outer portion of the bayonet channel and between this channel portion and the contacting portion of the contact upon the second carrier to constitute a bayonet seat against which the bayonet projection is pressed by the lateral pressure of the spring contact, when said movable contact carrier is in its inner position.

12. A circuit continuing device including a shell; a contact carrier surrounded by the shell and having bayonet projection and channel connection therewith, a portion of the bayonet channel leading to the inner or transverse portion sloping inwardly away from the inner termination of the bayonet channel; a second contact carrier connected with the shell; and contacts upon the adjacent ends of said carriers, a contact upon one carrier being a spring contact disposed to press toward the outer portion of the bayonet channel and transversely of the shell upon the complemental contact upon the other carrier when the bayonet projection is in the sloping portion and the transverse portion of the bayonet channel.

13. A circuit continuing device including a shell; a contact carrier surrounded by the shell and movable in and out and rotatively when in an inner position, said contact carrier and shell having engageable holding formations, the holding formation upon said contact carrier being adjustable to engaging position inwardly of the holding formation upon the shell when said contact carrier is turned while in an inner position to obstruct outward movement of said carrier; a second contact carrier connected with the shell; and contacts upon the adjacent ends of said carriers, a contact upon one carrier being a spring contact disposed to press transversely of the shell upon the complemental contact upon the other carrier and on one side of the axis of the rotatable contact carrier when said movable carrier is in its said inner position in a direction to engage said holding formations.

14. A circuit continuing device including contact carrier and socket members, one rotatable with respect to the other; a contact upon one member; a contact upon the other member being a spring contact exerting pressure laterally upon the other contact upon one side of the axis of the rotatable member to effect rotative movement of the rotatable member; and holding formations upon the contact carrier and socket that are brought into engagement upon the rotative movement of the rotatable member.

15. A circuit continuing device including contact carrier and socket members, one rotatable with respect to the other; a contact upon one member; and a contact upon the other member in the form of a leaf spring exerting pressure laterally upon the other contact upon one side of the axis of the rotatable member to effect rotative movement of the rotatable member.

16. A circuit continuing device including contact carrier and socket members, one rotatable with respect to the other; holding formations upon the contact carrier and socket that are brought into engagement upon rotative movement of the contact carrier with respect to the socket; and spring means upon one of these members pressing laterally upon the other member upon one side of the axis of the rotatable member to effect rotative movement of the rotatable member to bring said holding formations into engagement.

17. A circuit continuing device including contact carrier and socket members, one rotatable with respect to the other; a contact upon one member; and a contact upon the other member being a spring contact exerting pressure laterally upon the other contact upon one side of the axis of the rotatable member to effect rotative movement of the rotatable member.

18. A circuit continuing device including contact carrier and socket members, one rotatable with respect to the other; a contact upon one member; a contact upon the other member in the form of a leaf spring exerting pressure laterally upon the other contact upon one side of the axis of the rotatable member to effect rotative movement of the rotatable member; and holding formations upon the contact carrier and socket that are brought into engagement upon the rotative movement of the rotatable member.

19. A circuit continuing device including one element in the form of a shell; a second element in the form of a contact carrier sur-

rounded by the shell; a bayonet projection upon one of these elements, the other element having a channel formation engageable by the bayonet projection; a second contact carrier connected with the shell; a contact upon one carrier in the form of a plug; a complemental contact upon the other carrier in the form of a leaf spring having a socket for receiving said plug, said plug and socket being substantially in alinement when said movable contact carrier is in outer position, said spring being disposed to press transversely of the shell upon the complemental contact upon the other carrier when said movable carrier is in its inner position in a direction to bring the bayonet projection to position in the transverse portion of the bayonet channel.

20. A circuit continuing device including one element in the form of a shell; a second element in the form of a contact carrier surrounded by the shell; a bayonet projection, constituting a holding formation, upon one of these elements, the other element having a channel formation engageable by the bayonet projection, a portion of the bayonet channel leading to the inner or transverse holding formation portion sloping inwardly away from the inner termination of the bayonet channel; a second contact carrier connected with the shell; a contact upon one carrier in the form of a plug; and a complemental contact upon the other carrier in the form of a leaf spring having a socket for receiving said plug, said plug and socket being substantially in alinement when said movable contact carrier is in outer position, said spring being disposed to press transversely of the shell upon the complemental contact upon the other carrier when the bayonet projection engages the sloping channel portion and when said movable carrier is in its said inner position in a direction to engage said holding formations.

21. A circuit continuing device including a shell; a contact carrier surrounded by the shell and movable in and out and rotatively when in an inner position; a holding formation upon the shell; a holding formation upon said contact carrier engageable with the other holding formation and adjustable to engaging position inwardly of the holding formation upon the shell when said contact carrier is turned while in an inner position to obstruct outward movement of said carrier; a second contact carrier connected with the shell; a contact upon the carrier in the form of a plug; and a contact upon the other carrier in the form of a leaf spring having a socket for receiving said plug, said plug and socket being substantially in alinement when said movable contact carrier is in outer position, said spring being disposed to press transversely of the shell upon the complemental contact upon the other carrier when said movable carrier is in its said inner position in a direction to engage said holding formations.

22. A circuit continuing device including a cylindrical shell; a cylindrical contact carrier surrounded by the shell and movable in and out and rotatively when in an inner position; a holding formation upon the shell; a holding formation upon said contact carrier engageable with the other holding formation and adjustable to engaging position inwardly of the holding formation upon the shell when said contact carrier is turned while in an inner position to obstruct outward movement of said carrier; a second contact carrier connected with the shell; a contact upon one carrier; and a complemental contact upon the other carrier in the form of a leaf spring and disposed to press transversely of the shell upon the complemental contact upon the other carrier when said movable carrier is in its said inner position in a direction to engage said holding formations, said contacts having engaging formations that force the rotation of said contacts relatively and thereby of said movable contact carrier.

23. A circuit continuing device including a cylindrical shell; a cylindrical contact carrier surrounded by the shell and movable in and out and rotatively when in an inner position; a holding formation upon the shell; a holding formation upon said contact carrier adjustable to engaging position inwardly of the holding formation upon the shell when said contact carrier is turned while in an inner position to obstruct outward movement of said carrier; a second contact carrier connected with the shell; a contact upon one carrier; and a complemental contact upon the other carrier in the form of a leaf spring disposed to press transversely of the shell upon the complemental contact upon the other carrier when said movable carrier is in its said inner position in a direction to engage said holding formations, one of said contacts having a socket and the other having a plug portion for entering said socket, said plug and socket contact portions being substantially in alinement when said movable contact carrier is in outer position, said contacts having engaging formations that force the rotation of said contacts relatively and thereby of said movable contact carrier.

In witness whereof, I hereunto subscribe my name this 12th day of August, A. D. 1918.

HARRY A. DOUGLAS.