Nov. 25, 1952 D. W. WILLIAMSON 2,618,961

FURNACE WALL

Filed Aug. 29, 1946 3 Sheets-Sheet 1

Fig. 1.

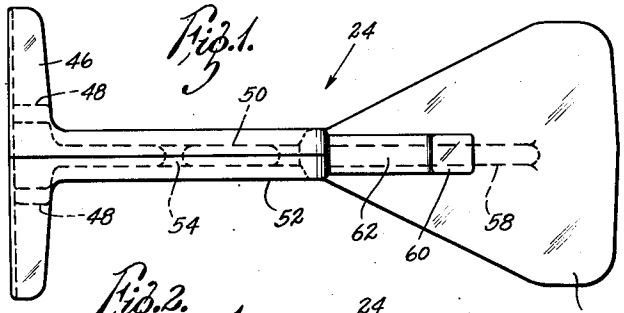

Fig. 4.

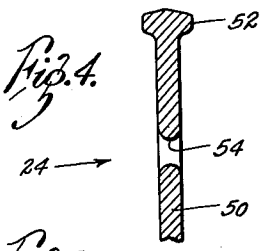

Fig. 2.

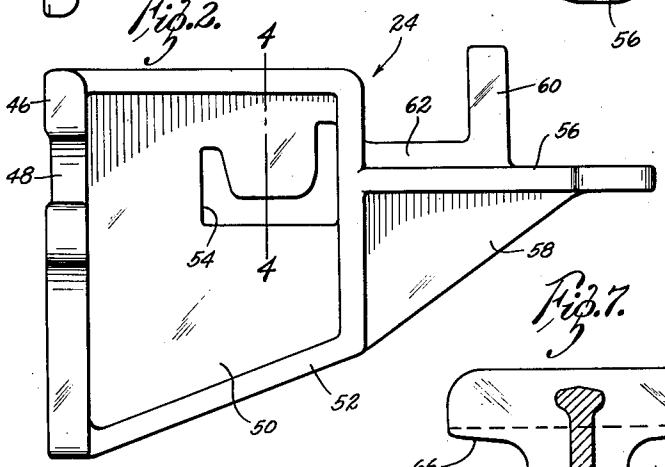

Fig. 3.

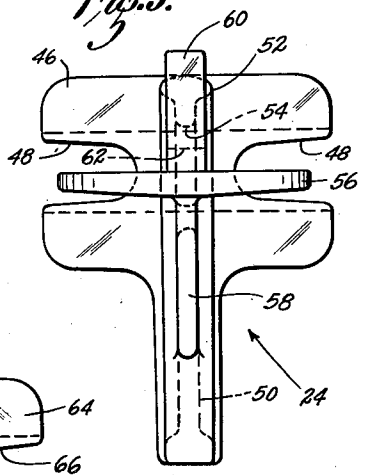

Fig. 7.

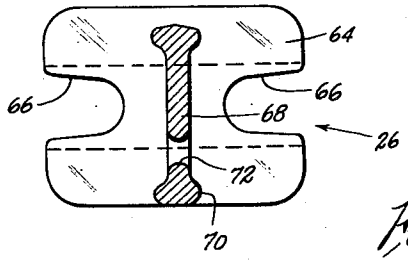

Fig. 5.

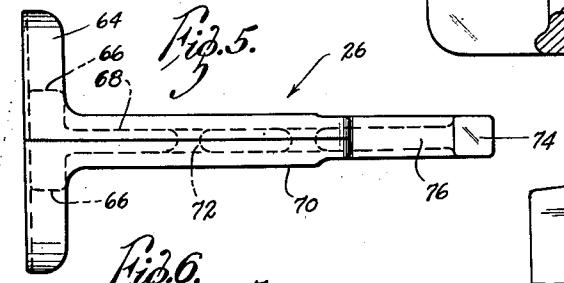

Fig. 8.

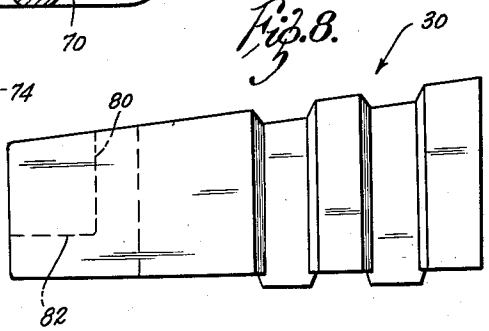

Fig. 6.

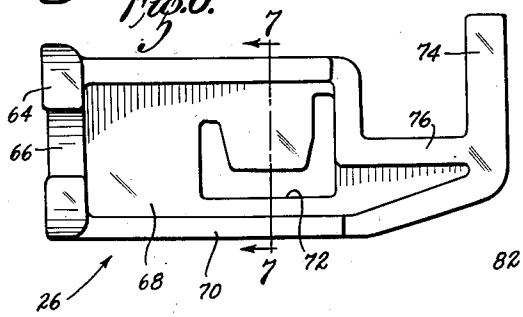

Fig. 9.

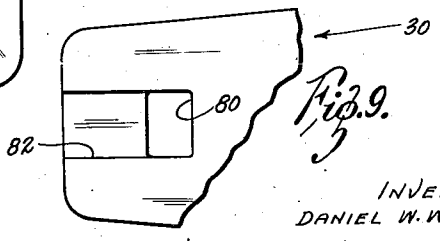

INVENTOR:
DANIEL W. WILLIAMSON
BY Kingsland, Rogers & Ezell,
ATTORNEYS.

Nov. 25, 1952 D. W. WILLIAMSON 2,618,961

FURNACE WALL

Filed Aug. 29, 1946 3 Sheets-Sheet 2

Fig. 10.

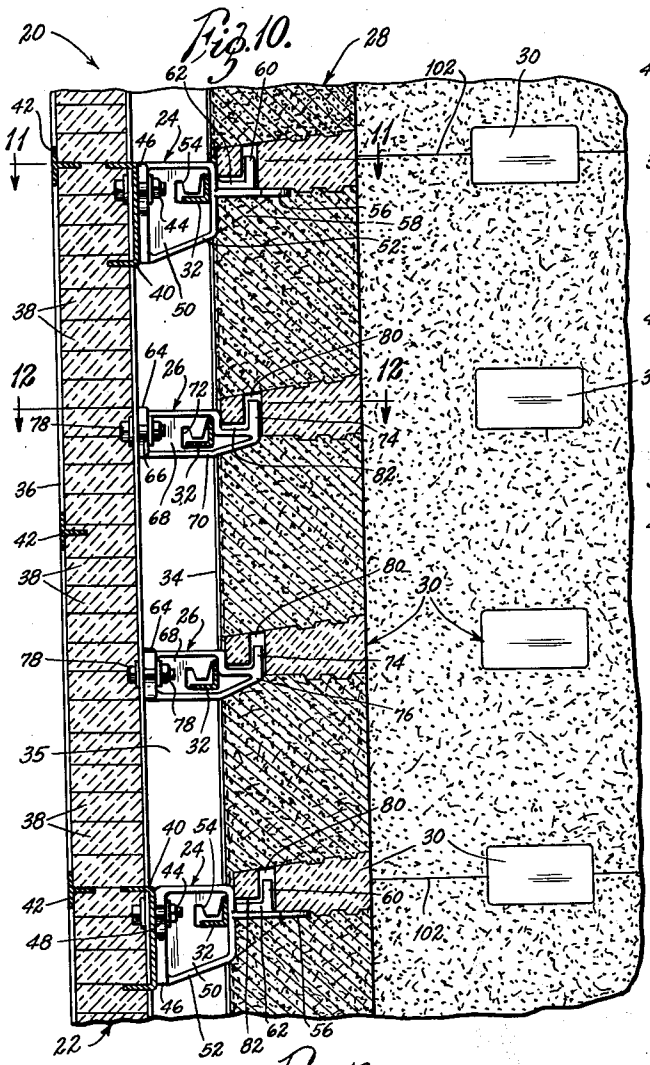

Fig. 11.

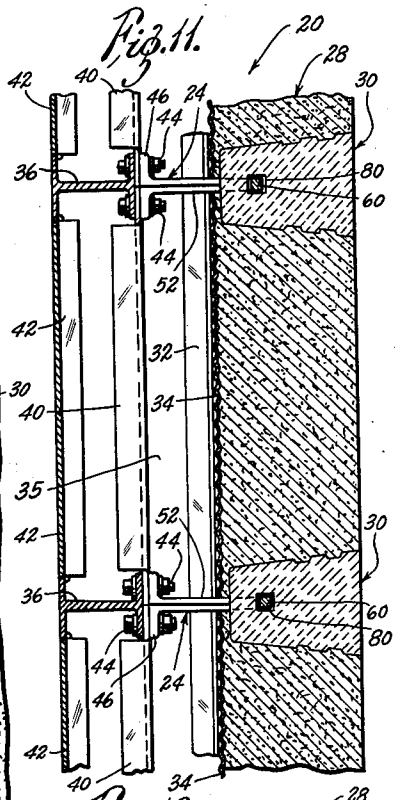

Fig. 12.

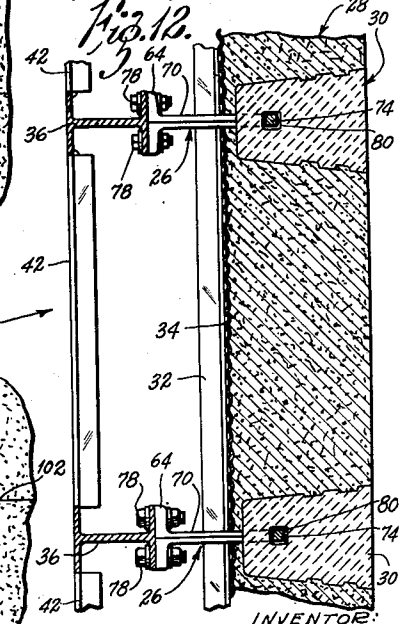

Fig. 13.

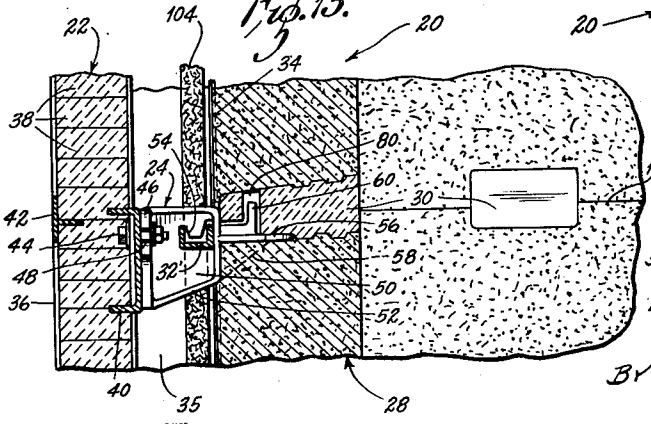

INVENTOR:
DANIEL W. WILLIAMSON,
By Kingsland, Rogers & Ezell
ATTORNEYS

Nov. 25, 1952 D. W. WILLIAMSON 2,618,961

FURNACE WALL

Filed Aug. 29, 1946 3 Sheets-Sheet 3

Fig. 14.

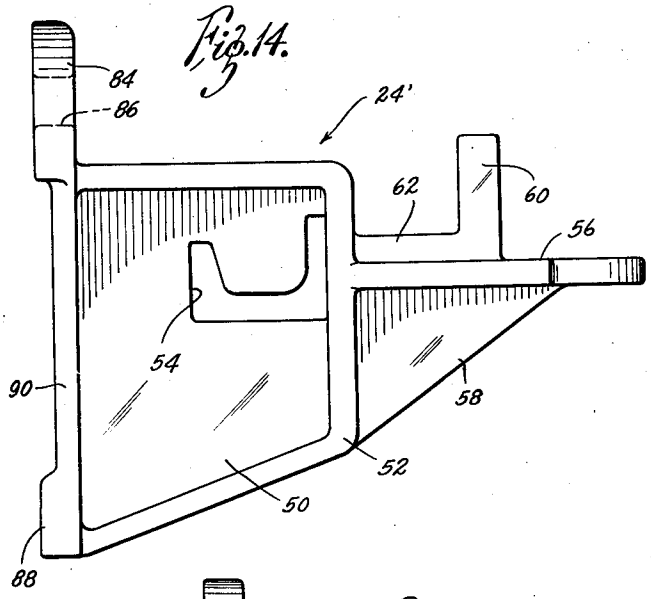

Fig. 15.

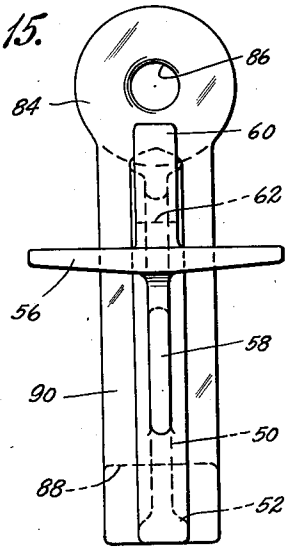

Fig. 16.

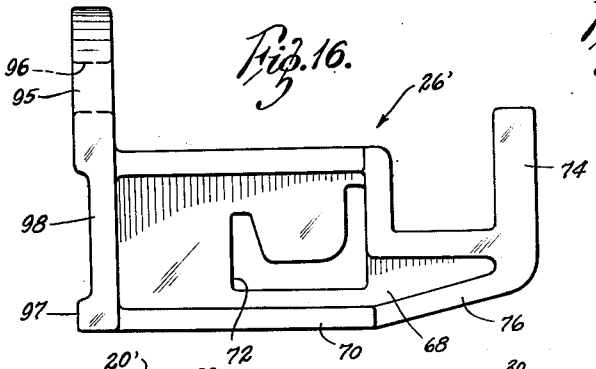

Fig. 17.

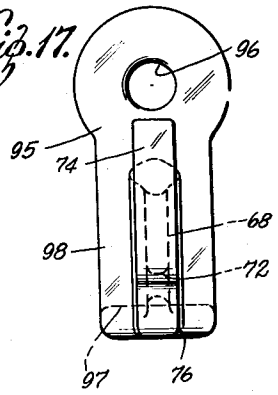

Fig. 18.

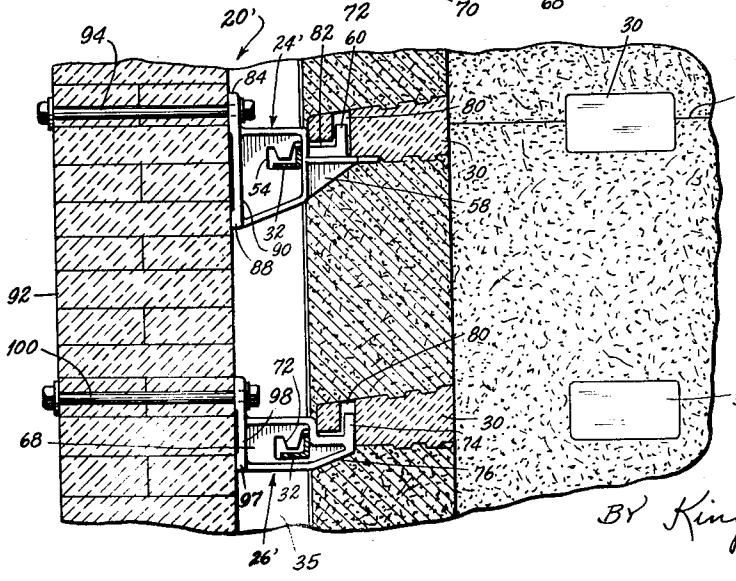

INVENTOR:
DANIEL W. WILLIAMSON,
BY Kingsland, Rogers & Ezell
ATTORNEYS.

Patented Nov. 25, 1952 2,618,961

UNITED STATES PATENT OFFICE

2,618,961

FURNACE WALL

Daniel W. Williamson, Ferguson, Mo., assignor to Laclede-Christy Clay Products Company, St. Louis, Mo., a corporation of Missouri

Application August 29, 1946, Serial No. 693,781

8 Claims. (Cl. 72—101)

1

The present invention relates generally to wall constructions, and more particularly to an air-cooled wall construction which is adapted to be employed as a furnace wall, or the like, and to particular brackets forming parts thereof.

An object of the present invention is to provide a novel air-cooled wall construction which is adapted to be employed as the defining wall of a furnace, or the like, and which increases the life of the flame-confining material.

Another object is to provide a novel air-cooled wall construction which incorporates a monolithic refractory portion anchored to and spaced from a supporting portion.

Another object is to provide a novel air-cooled wall construction incorporating a monolithic refractory inner portion in which an air space is provided between the outside of the monolithic portion and a spaced solid support which protects supporting brackets disposed therein through cooling the same and which provides preheated combustion air.

Another object is to provide a novel anchor bracket for a monolithic wall which is constructed to support members adapted to serve as an abutment for the outer surface of the monolithic wall.

Another object is to provide a novel bracket which is adapted to support a segment of a monolithic wall and to anchor the monolithic segment against movement from its initial substantially vertical plane, and which further supports a structural member adapted to prevent movement of the monolithic segment in the other direction from that prevented by the anchoring function of the bracket.

Another object is to provide a novel air-cooled refractory wall construction which finds manifold adaptations in enclosing furnaces, and the like, of single or battery type.

Other objects are to provide a novel air-cooled wall construction of the monolithic refractory material type in which an air cushion of static or moving air is provided between the inner monolithic refractory wall portion and an outer solid wall, or between two spaced monolithic refractory walls, to achieve a minimum of heat loss to the exterior, and to protect the outer wall and supporting brackets from excessive heat, which is of sturdy and long lasting construction, which is readily fabricated in its manifold adaptations, and which is relatively economical to install.

Other objects and advantages are apparent from the following description taken with the accompanying drawings, in which:

2

Fig. 1 is a top plan view of a novel bracket forming a part of the present novel wall construction, which is formed in accordance with the teachings of the present invention;

Fig. 2 is a side elevational view of said bracket;

Fig. 3 is a front elevational view of said bracket;

Fig. 4 is a cross-sectional view on the line 4—4 of Fig. 2;

Fig. 5 is a top plan view of another novel bracket comprising part of the present novel wall construction;

Fig. 6 is a side elevational view of the bracket of Fig. 5;

Fig. 7 is a cross-sectional view on the line 7—7 of Fig. 6;

Fig. 8 is a side elevational view of a refractory member which cooperates with the brackets illustrated in Figs. 1 through 6 to anchor the monolithic refractory wall forming part of the present novel wall construction;

Fig. 9 is a fragmentary bottom plan view of the refractory member shown in Fig. 8;

Fig. 10 is a vertical cross-sectional view through an air-cooled wall construction constructed in accordance with the concepts of the present invention, a portion of wall being shown in elevation;

Fig. 11 is a horizontal cross-sectional view on the line 11—11 of Fig. 10, the brick work being omitted for clarity of illustration;

Fig. 12 is a horizontal cross-sectional view on the line 12—12 of Fig. 10, the brick work being omitted for clarity of illustration;

Fig. 13 is a vertical cross-sectional view similar to Fig. 10 but incorporating insulation in the air space;

Fig. 14 is a side elevational view of a bracket similar to the bracket shown in Figs. 1 through 4, incorporating a modified securing flange construction;

Fig. 15 is a front elevational view of the bracket shown in Fig. 14;

Fig. 16 is a side elevational view of a bracket similar to the bracket shown in Figs. 5 through 7, incorporating a modified securing flange;

Fig. 17 is a front elevational view of the bracket shown in Fig. 16; and

Fig. 18 is a vertical cross-sectional view through an air-cooled wall construction similar to the wall construction of Fig. 10 but incorporating the modified brackets of Figs. 14 through 17.

Referring to the drawings more particularly by reference numerals and specifically considering Figs. 10 through 12, 20 indicates generally an air-cooled wall construction fabricated in accordance

with the teachings of the present invention. Broadly, the preferred embodiment of the air-cooled wall construction 20 of Figs. 10 through 12 includes an exterior wall 22, combination structural member positioning and supporting and monolithic wall section anchoring and supporting brackets 24 (Figs. 1 through 4), combination structural member positioning and supporting and monolithic wall anchoring brackets 26 (Figs. 5 through 7), a monolithic refractory wall 28, inner monolithic refractory wall anchor tiles 30 (Figs. 8–9), structural members 32, and corrugated backing sheets 34. An air space 35 is thus defined by the wall 22 and the sheets 34 which may contain static or circulated air, or the like.

The exterior wall 22 is formed of spaced structural steel I beams 36 between which are bricks 38. At selected positions, steel structural channel members 40 are bolted or otherwise connected to the inner flanges of the I beams 36. Exteriorly disposed reinforcing steel T beams 42 may be used to assist in maintaining bricks 38 in place.

A bracket 24 is connected by bolt assemblies 44 to each I beam 36 against the web of the channel members 40, the same bolt assemblies 44 also maintaining the channel members 40 in place. The bracket 24 is of the configuration clearly shown in the drawings (Figs. 1 through 4), and includes a double flange 46 having opposed notches 48. A vertical web 50 is formed integral with the flange 46, and is reinforced by a bead 52 extending around three sides thereof. A channel-shaped opening 54 is formed in the web 50. A platform 56 extends outwardly from the vertical portion of the bead 52, the outline of the platform being clearly shown in Fig. 1. A platform supporting web 58 is disposed beneath the platform 56 and in the plane of the web 50. A refractory member or tile receiving post 60 is mounted on the platform 56. A web 62 is disposed on the platform 56 between the vertical portion of the bead 52 and the post 60.

The bracket 26, which is employed with the bracket 24 to form the supporting and anchoring elements of the present wall construction 20, includes a double flange 64 having opposed notches 66 (Figs. 5 through 7). A vertical web 68 formed integral with the flange 64 extends outwardly therefrom and is reinforced by a bead 70. A channel-shaped opening 72 of substantially the same shape as the channel-shaped opening 54 of the bracket 24 is formed in the web 68. An upwardly extending post 74 is supported at the free end of a bead extension 76. Each bracket 26 is supported from the inner leg of an I beam 36 by bolt assemblies 78 (Figs. 10 and 12).

The refractory anchor tiles 30 may be of any configuration within wide limits, but a preferred form is shown in the drawings. The tile 30 is more particularly described in my copending application, Serial No. 678,347, filed June 21, 1946, now abandoned. At its reduced end, the tile 30 includes a vertical opening 80 and a connecting groove 82.

In Figs. 14 and 15 is shown a bracket 24' which is the same as the bracket 24 in all details except the attaching flange. The bracket 24' includes a circular flange 84 having a central aperture 86. Below the circular flange 84 is a heel flange 88 which is flush with the circular flange 84 and which is connected with the latter by a web 90. As is shown in Fig. 18, the bracket 24' is secured to a supporting wall, such as a brick wall 92, by a single bolt assembly 94.

In Figs. 16 and 17 there is shown a bracket 26' which is of the same form as the bracket 26 with the exception of the attaching flange. The bracket 26' includes a circular flange 95 having an aperture 96 therethrough and a heel flange 97 in the same plane as the circular flange 95 and connected thereto by a web 98. The same reference numerals employed in respect to the brackets 24 and 26 are applied to the brackets 24' and 26' except for the foregoing flange constructions. As is shown in Fig. 18, the bracket 26' is connected to the wall 92 by a single bolt assemblage 100.

In fabricating the present novel wall construction 20, the I beams 36 of the wall 22 are duly positioned and the channel members 40 bolted thereto. The brackets 24 are bolted to the web of the channels 40 and to the inner leg of the I beams 36 by the bolt assemblies 44, and the brackets 26 are secured to the inner legs of the I beams 36 by the bolt assemblages 78. Thereupon, the bricks 38 are placed between the webs of the I beams 36 which may be reinforced by the T members 42. The brackets 24 and 26 are disposed in spaced horizontal rows. Structural members 32 are inserted through the channel openings 54 and 72 thereof, respectively, for support thereby. In the drawing, angle irons are shown, though the cross section of the structural members 32 may vary as desired. It is preferable to use structural members 32 having at least one flat surface against which the corrugated metal sheets 34 are disposed. The sheets 34 are located exteriorly of the structural members 32 after the latter are installed, thus defining the air space 35 between the sheets 34 and the wall 22.

The monolithic refractory wall 28 is then built up against the sheets 34 as a backing. The refractory wall 28 is formed from plastic refractory material. As the level of the plastic refractory material from which the wall 28 is formed reaches a row of brackets, the refractory tiles 30 are disposed on the respective posts, the vertical opening 80 and the slot 82 of the tile 30 surrounding the post 60 and the rib 62 of the bracket 24 and the post 74 and the bead extension 76 of the bracket 26, as the case may be. After the wall 28 is completed, contraction lines 102 are marked in the outer surface to define monolithic wall segments to be supported by the brackets 24 and their associated tiles 30.

It is manifest that in fabricating the wall construction 20', shown in Fig. 18, the steps are the same as in the fabrication of the wall construction 20, except for the initial building of the brick wall 92 and the provision of openings to receive the long bolts of the bolt assemblies 94. In Fig. 13, insulation 104 is shown disposed in the plane of the structural members 32', which are shown as channel members.

The present wall construction 20 finds numerous adaptations in addition to those particularly disclosed herein. For example, the present wall construction 20 may be employed to advantage in the formation of the defining walls for a battery of furnaces, and the like. When the wall construction 20 is adapted to define a battery of furnaces, or the like, a central vertical structural member, such as an I beam, will carry two vertical rows of brackets 24 and 26 disposed at 180° to each other. A plurality of such structural members with the double row of brackets 24 and 26 will replace the wall 22, and there will be a refractory wall 28, or the like, on each side of the supporting structural members.

The brackets 24 and 26 and the modifications thereof are preferably cast as integral units, although they may be fabricated.

It is apparent that there have been provided a novel wall construction and novel brackets forming parts thereof adapted to fulfill the objects and advantages sought therefor.

The foregoing description and the accompanying drawings have been given by way of illustration and example. It is to be understood that changes in form, substitution of equivalent elements, and rearrangement of parts that will be manifest to those skilled in the art are contemplated as within the scope of the present invention, which is limited only by the claims which follow.

What is claimed is:

1. In combination, an air-cooled wall construction comprising a monolithic refractory wall defining a portion of a furnace, backing sheets against which the outer surface of the wall is disposed, an air-retaining wall spaced from the backing sheets and defining therewith an air space, and brackets secured to said retaining wall and spanning said air space and having an anchor member connected thereto and embedded in said refractory wall, said brackets having means for positioning and supporting structural members forming a backing for said backing sheets, there being such structural members in said means.

2. In combination, an air-cooled wall construction comprising a monolithic refractory wall, a backing against which said wall is disposed including vertical and horizontal elements, means supporting said horizontal elements and anchoring said refractory wall against outward movement comprising a multi-purpose bracket, means supporting said last-named means, and a passage for air contiguous to said vertical elements, said vertical elements comprising one defining wall of the passage.

3. In combination, an air-cooled wall construction comprising a solid exterior wall, brackets connected to said wall and extending therefrom, each bracket having a web with an opening therethrough to position and support a structural member, structural members supported in said openings in horizontal position, metal sheets backed against said structural members and spaced from said solid wall thereby defining a passage for air, said brackets extending beyond said sheets, and a monolithic refractory wall backed against the sheets having tiles embedded therein and engaged by said brackets whereby said refractory wall is anchored against falling outwardly from said sheets.

4. In combination, an air-cooled wall construction comprising a solid exterior wall, brackets connected to said wall and extending therefrom, each bracket having a web with a channel-shaped opened therethrough, structural members supported in said openings in horizontal positions, metal sheets backed aganist said structural members and spaced from said solid wall thereby defining a passage for air, said brackets extending beyond said sheets, and a monolithic refractory wall backed against the sheets having tiles embedded therein and engaged by said brackets, whereby said refractory wall is anchored against falling outwardly from said sheets.

5. In combination, an air-cooled wall construction comprising a solid exterior wall, brackets connected to said wall and extending therefrom,

structural members supported by said brackets in horizontal position, metal sheets backed against said structural members and spaced from said solid wall thereby defining a passage for air, said brackets extending beyond said sheets, and a monolithic refractory wall backed against the sheets having tiles embedded therein and engaged by said brackets, whereby said refractory wall is anchored against falling outwardly from said sheets.

6. In combination, an air-cooled wall construction comprising a solid exterior wall, brackets connected to said wall and extending therefrom, each bracket having a web with an opening therethrough to position and support a structural member, structural members supported in said openings in horizontal position, metal sheets backed against said structural members and spaced from said solid wall thereby defining a passage for air, said brackets extending beyond said sheets, and a monolithic refractory wall backed against the sheets having anchoring members embedded therein loosely engaging said brackets, whereby said refractory wall is anchored against falling outwardly from said sheets.

7. In combination, an air-cooled wall construction comprising bracket supporting members, brackets connected to and supported by said members in back to back relation and extending therefrom, each bracket having a web with an opening therethrough to position and support a structural member, structural members supported in said openings in horizontal position, metal sheets backed against said structural members and spaced from said bracket supporting members thereby defining a passage for air between said metal sheets and said bracket supporting members, said brackets extending beyond said sheets, and a monolithic refractory wall backed against the sheets having anchoring members embedded therein and engaged by said brackets, whereby said refractory wall is anchored against falling outwardly from said sheets.

8. In combination, an air-cooled wall construction comprising bracket supporting members, brackets connected to and supported by said members in back to back relation and extending therefrom, structural members supported by said brackets in horizontal position, metal sheets backed against said structural members and spaced from said bracket supporting members thereby defining a passage for air between said metal sheets and said bracket supporting members, said brackets extending beyond said sheets, and a monolithic refractory wall backed against the sheets having anchoring members embedded therein and engaged by said brackets, whereby said refractory wall is anchored against falling outwardly from said sheets.

DANIEL W. WILLIAMSON.

REFERENCES CITED

The following references are of record in the file of this patent:

UNITED STATES PATENTS

Number	Name	Date
1,719,475	Jacobus et al	July 2, 1929
1,762,099	Phillips	June 3, 1930
1,787,464	Anderson	Jan. 6, 1931
2,239,588	Cassady	Apr. 22, 1941
2,463,217	Tonneson	Mar. 1, 1949