P. EBY.

SEPARATING MACHINE.

APPLICATION FILED JUNE 9, 1920.

1,347,215. **Patented July 20, 1920.**

2 SHEETS—SHEET 1.

FIG. 1

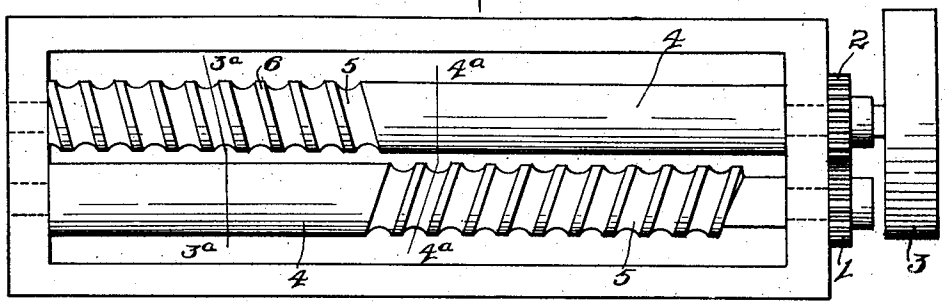

FIG. 2

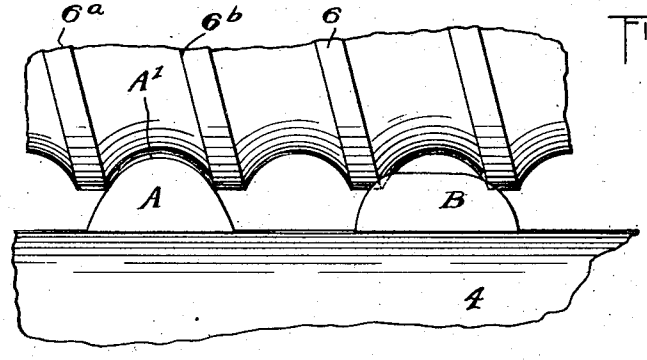

FIG. 3

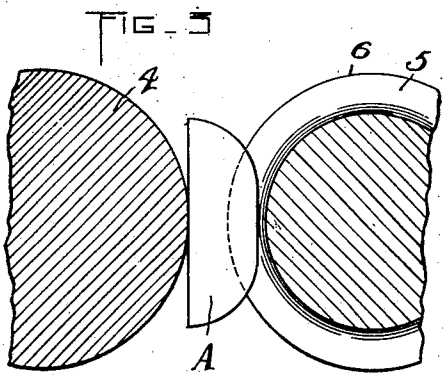

FIG. 4

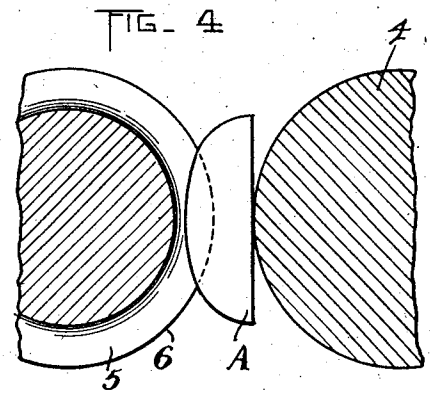

INVENTOR

Philip Eby

BY

Davis & Simmons

his ATTORNEYS

P. EBY.

SEPARATING MACHINE.

APPLICATION FILED JUNE 9, 1920.

1,347,215. **Patented July 20, 1920.**

2 SHEETS—SHEET 2.

FIG. 5

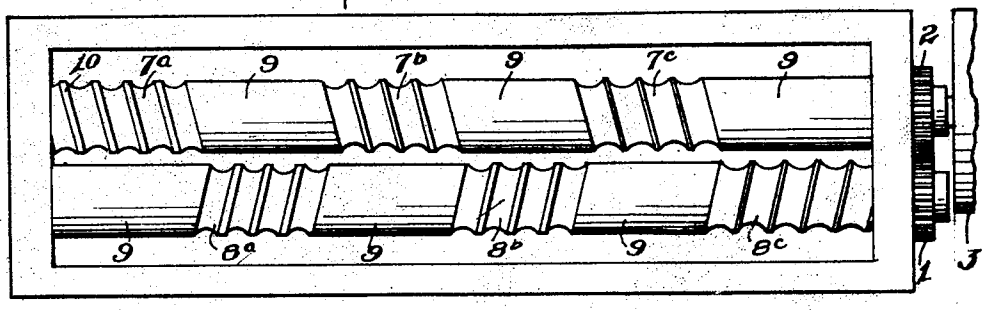

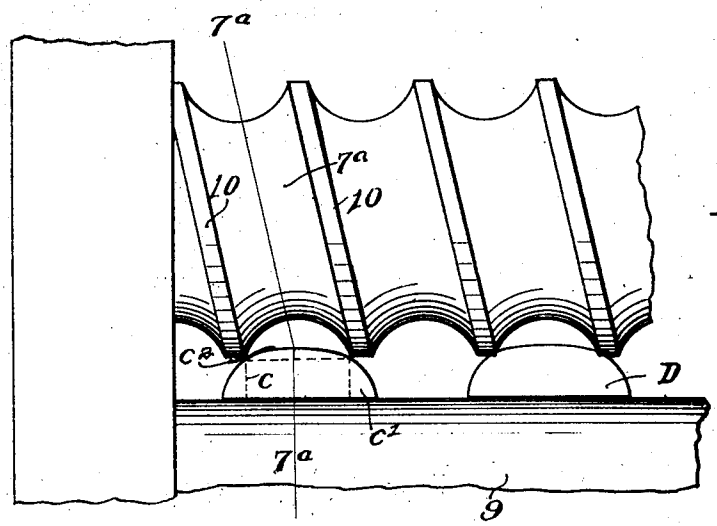

FIG. 6

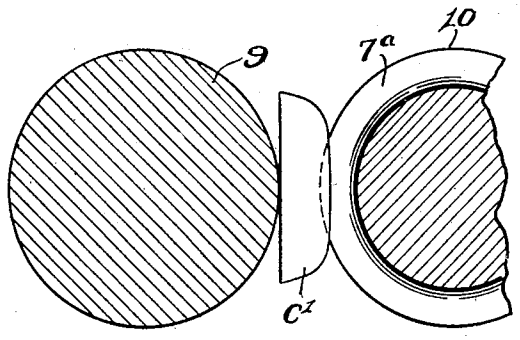

FIG. 7

INVENTOR

Philip Eby

BY

Davis & Simmons

his ATTORNEYS

UNITED STATES PATENT OFFICE.

PHILIP EBY, OF ROCHESTER, NEW YORK, ASSIGNOR TO ART IN BUTTONS, INC., OF ROCHESTER, NEW YORK, A CORPORATION OF NEW YORK.

SEPARATING-MACHINE.

1,347,215. Specification of Letters Patent. Patented July 20, 1920.

Substitute for application Serial No. 312,369, filed July 21, 1919; renewal of application Serial No. 21,540, filed February 4, 1918; renewal of application Serial No. 114,705, filed August 14, 1916. This application filed June 9, 1920. Serial No. 387,544.

To all whom it may concern:

Be it known that I, PHILIP EBY, a citizen of the United States, and resident of Rochester, in the county of Monroe and State of New York, have invented certain new and useful Improvements in Separating-Machines, of which the following is a specification.

The present invention relates to separating machines and an object thereof is to afford a machine for readily separating blanks of different sizes, with particular reference to button blanks, which have a shape generally semi-spherical or semi-elliptical, including one flat side produced by sawing the nut to form the blanks. The structure is designed with a view to separating button blanks according to the maximum size of button that can be formed therefrom. Another object of the invention consists in providing a simplified structure of very few parts, which will automatically receive and separate the blanks irrespective of the manner in which they are fed to the apparatus, so that they can be placed in the machine indiscriminately, without regard to location, thus greatly reducing the time and labor involved in the operation.

To these and other ends the invention consists of certain parts and combinations of parts, all of which will be hereinafter described, the novel features being pointed out in the appended claims.

In the drawings:

Figure 1 is a plan view of an apparatus constructed in accordance with this invention;

Fig. 2 is an enlarged plan view of a portion of the machine showing two blanks in position;

Fig. 3 is a sectional view on the line 3^a—3^a of Fig. 1, showing a blank in position;

Fig. 4 is a sectional view on the line 4^a—4^a of Fig. 1, showing the position of a blank when reversed from the position of Fig. 3;

Fig. 5 is a plan view of a modified form of the apparatus;

Fig. 6 is an enlarged plan view of a portion of the machine shown in Fig. 5 with a pair of blanks in operative position; and

Fig. 7 is a sectional view on the line 7^a—7^a of Fig. 6.

Similar reference characters throughout the several views indicate the same parts.

There are various ways in which the invention may be carried out in a practical way, and in the drawings there are disclosed two forms of construction which illustrate preferred methods of accomplishing the result, although it will be understood that the invention is not limited to the precise arrangements herein disclosed, which are intended merely as illustrative of the novel features. The structure of Fig. 1 includes a pair of rotary members having their axes of rotation in the same horizontal plane and carrying pinions 1 and 2 in mesh with each other, while 3 is a drive pulley mounted on one of the rotary members for application of power thereto from any suitable source. Each of the rotary members comprises a cylindrical portion 4 and a spirally grooved portion 5, the cylindrical portion upon each member being disposed opposite the spirally grooved portion upon the other, and serving to engage the flat side of a blank A in the manner shown in Fig. 2. The cylindrical and spirally grooved portions are alternated on each member so that a blank becomes properly positioned with its flat side against a cylindrical portion, irrespective of how it is fed into the apparatus, as clearly illustrated by the oppositely disposed blanks shown in Figs. 3 and 4 respectively. The spiral groove is limited by two abrupt edges or points 6^a and 6^b formed by a narrow cylindrical shoulder 6, and is of such a size as to receive the rounded portion A′ of a blank. Blanks of different sizes afford various sized buttons, and the blanks are separated according to the size of the button that can be formed from them. In the structure shown in Figs. 1 and 2, if the rounded portion A′ is narrower than the distance between the supporting edges 6^a and 6^b of the cylindrical surface 6, the blank will fall through into a suitable receptacle provided for the purpose, and any blank larger than that just referred to will be carried by movable abrupt gaging points or edges to the end of the groove and discharged into another receptacle. In the ma-

chine just described, provision is made for separating the blanks according to two sizes only, one under the size of the spiral groove 5, and the other over such size, and in Fig. 2 there are illustrated two blanks, one of which is shown in the position of falling through between the cylindrical surface and the spiral groove, while the other blank B is of a different contour from which a larger button can be formed, and is shown in the act of being carried along the spiral groove resting against the cylindrical shoulder 6 of the one member and the cylindrical portion 4 of the other.

In Figs. 5 to 7 inclusive, there is shown another form of this device, designed for separating, according to three different sizes, and to this end the spirally grooved portions 7^a, 7^b and 7^c and 8^a, 8^b and 8^c are of constantly increasing size, so that as a blank travels from the left hand to the right hand end of the machine, the smaller blanks will be discharged first, and the larger ones carried to the right hand end of the apparatus, it being understood that suitable receptacles are provided for the different sections of the separating members, one for each size. The spirally grooved portions and the cylindrical portions are arranged alternately on the respective rotary members so that a cylindrical portion 9 may engage a flat side of a blank in either position that it may assume when fed to the machine. The spirally grooved portions 7^a and 8^a are of one size, 7^b and 8^b of the next larger size, and 7^c and 8^c of the largest size, and in Fig. 6 there appear two blanks in the position which they assume in the machine; the dotted line C of the blank C′ shows the approximate size of the button that is to be cut from the blank before finishing, and the spiral groove 7^a measures the blank and either permits it to be discharged or carries it farther to another part of the machine, this being accomplished by engagement of the edges of the cylindrical shoulder 10, on opposite sides of the groove 7^a, at opposite points of the rounded portion C^2 of the blank, while the flat side of the latter is engaged by the cylindrical portion 9 upon the opposite rotary member. The blank C′, it will be observed, is of approximately the size determined by the rectangle formed between the rotary members and indicated by the dotted line C, so that the blank C′ is discharged into a pocket or receptacle under this portion of the apparatus, while the blank D is of larger contour, and is fed longitudinally of the machine through the action of the spiral grooves until it reaches a space that is large enough to permit it to fall into its particular receptacle.

It will be observed that the button blanks are sorted, by measuring or gaging them so as to determine their average thickness, thus enabling their classification according to both the greatest depth and largest diameter of a given predetermined size of button which it is practical to subsequently cut from a blank. The sorting is done by measuring the thickness of the blank at two separated points, which we may term the shoulders, which are spaced equi-distantly from a base line against which the flat face of the blank rests. In the machine illustrating the present embodiment of the invention, the cylindrical portion of one of the rolls comprises the base, and the gage points are formed by the adjacent, or inner boundary edges of the opposing convolutions on the other roller. The two rolls rotate upon parallel axes and are separated a predetermined distance, thus fixing the thickness measurement of the blanks which may pass between the cylinder of one roll and the edges of the convolutions on the opposing roll. The convolutions are helical recesses forming alternate ridges and depressions, the ridges between adjacent convolutions being of sufficient width to provide a cylindrical surface or surfaces, the edges of which constitute the separated gage points which test the button blanks according to the diameter of the button which is to be cut at the same time the blank is measured to determine its thickness. The depths of the recesses formed by the convolutions are of importance only in so far as they provide sufficient clearance to allow the domed or rounded surfaces of the blanks to pass through between the separated gage points which measure the blanks to determine their shoulder thickness.

What I claim as my invention and desire to secure by Letters Patent is:

1. A separating machine comprising a pair of rotary members arranged in spaced relation to each other in substantially the same horizontal plane, and provided with alternately arranged cylindrical and spirally grooved portions, the spiral grooves increasing in size in the successive grooved portions from one end of the machine to the other, and disposed opposite cylindrical portions on the other member.

2. A separating machine comprising a pair of rotary members arranged in spaced relation to each other in substantially the same horizontal plane and each provided with a series of alternately arranged cylindrical and spirally grooved portions which are in staggered relation on the two members, the latter being the same distance apart throughout their length and the spiral grooves of the series of grooved portions increasing in size from one end of the machine to the other, whereby the larger sized blanks are not discharged until they reach the corresponding larger grooves.

3. A button blank sorting machine comprising a base member having a plain surface, and a spirally grooved roller having spiral ridges provided with cylindrical faces and abrupt corners adapted to coöperate with said base member to measure the depth and shoulder thickness of a blank.

4. A button blank sorting machine comprising two opposed rollers spaced apart and mounted to revolve upon parallel axes, one roller having a cylindrical surface comprising a measuring base and the other provided with a helical groove and ridges having cylindrical faces, the edges of the ridges at opposite sides of the groove forming gage points coöperating with the base surface to simultaneously measure the depth and shoulder thickness of a blank.

5. A button blank sorting machine comprising a base member having a plain surface, and a carrier having abrupt gaging points spaced to define the diameter of the button and being spaced from the base member a distance less than the distance between said gaging points to define the thickness of the button.

6. A button blank sorting machine for sorting button blanks having the general form of spherical segments and having plane bases, said machine comprising a base member and a coöperating member substantially parallel therewith, and having gaging points spaced from each other to define the diameter of a button and from the base member to define the shoulder thickness thereof.

7. A button blank sorting machine comprising a plurality of pairs of abrupt gaging points movable to carry the button blank from one pair to the next and spaced apart to define the diameter of the button, each pair of points having a greater distance between its points than the distance between the points of the preceding pair, and means spaced from the abrupt gaging points a distance less than the distance between the gaging points to define the thickness of the button.

8. A button blank sorting machine comprising a pair of rotary members having a pair of abrupt edges spaced to define the diameter of the button and formed to feed the blanks in the direction of the axes of the rotary members, said rotary members also having means to support the blank during such feeding, said means being spaced from the abrupt edges a distance less than the distance between such gaging edges to define the thickness of the button.

9. A button blank sorting machine comprising a base member, and means for moving a button blank along said base member having a pair of abrupt gaging points spaced to define the diameter of the button and spaced from the base member a distance less than the distance between said gaging points to define the thickness of the button.

10. A button blank sorting machine comprising a base member, and rotary means for moving the button blanks along said base member, said rotary means having two spirally formed abrupt gaging points spaced to define the diameter of each button, and spaced from the base member a distance less than the distance between said gaging points to define the thickness of the button.

11. A machine for sorting button blanks comprising a pair of rotary members having coöperating portions to feed button blanks in the direction of the axes of the members, said portions providing a pair of abrupt gage edges for defining the diameter of the button, and also providing means for defining the thickness of the button.

PHILIP EBY.