United States Patent [19]

Snyder

[11] **3,895,629**

[45] **July 22, 1975**

[54] **MEDICAL INSTRUMENT RETAINER**

[76] Inventor: **Elizabeth M. Snyder,** 1763 S. Heather Ln., Anaheim, Calif. 92802

[22] Filed: **Oct. 15, 1974**

[21] Appl. No.: **514,655**

[52] **U.S. Cl.**..... **128/171;** 128/214 R; 128/303 R; 128/348; 128/DIG. 26; 128/290 R

[51] **Int. Cl.**[2]..... **A61F 13/00;** A61M 25/02

[58] **Field of Search**..... 128/155–158, 128/171, 348, DIG. 26, 288, 290 R, 290 H, 350, 351, 1 R, 214 R, 303 R, 283

[56] **References Cited**

UNITED STATES PATENTS

2,606,555	8/1952	Solomon	128/171
3,046,984	7/1962	Eby	128/214 R
3,138,158	6/1964	Gordon et al.	128/348 X
3,516,409	6/1970	Howell	128/335
3,765,401	10/1973	Vass	128/DIG. 26

Primary Examiner—Lawrence W. Trapp
Attorney, Agent, or Firm—Gausewitz, Carr & Rothenberg

[57] **ABSTRACT**

A garment to retain a medical instrument in position at the perineum is formed with mutually overlapping and detachable interconnected bifurcated crotch panels that collectively define an instrument gripping aperture. The bifurcations permit the overlapping panels to be connected to each other or disconnected from each other in operative relation to the emplaced medical instrument without removing the instrument or disconnecting it from external apparatus. An absorbent dressing has an aperture in communication with an edge of the dressing by means of a slit extending through the dressing so that the dressing too may be positioned about and removed from the emplaced medical instrument without disturbing the instrument.

7 Claims, 8 Drawing Figures

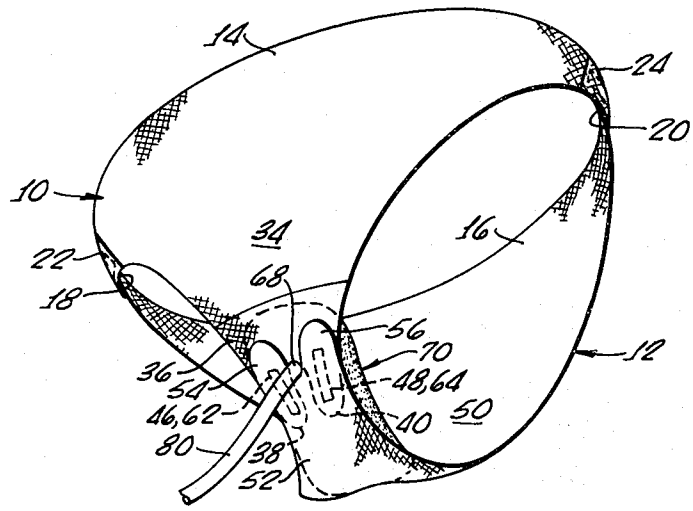

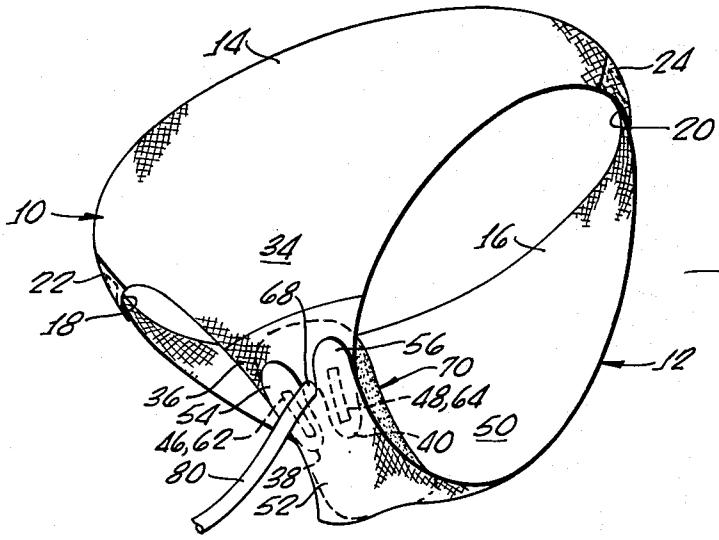

FIG. 1.

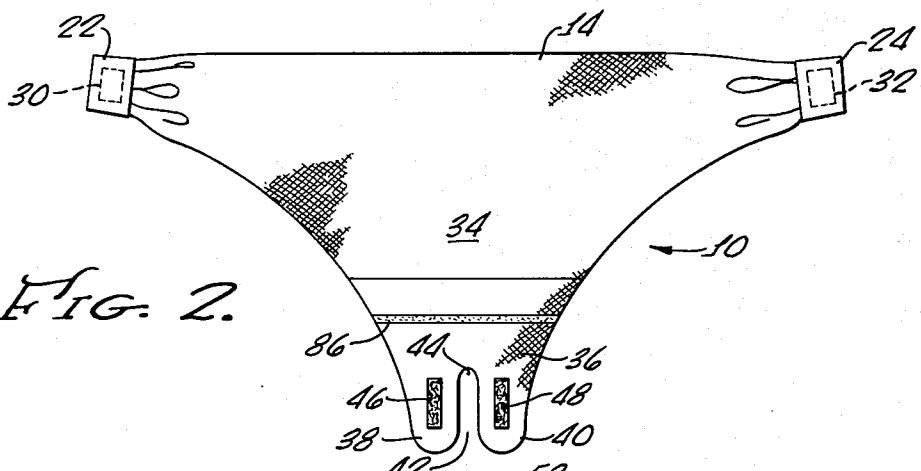

FIG. 2.

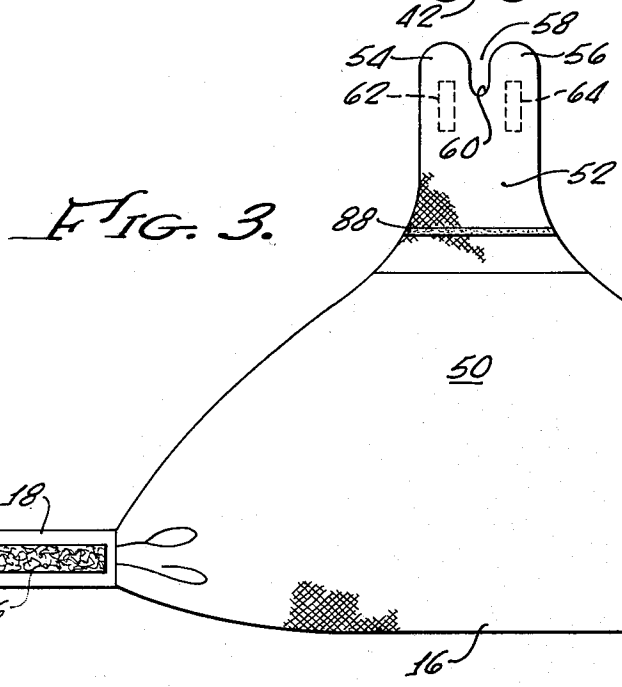

FIG. 3.

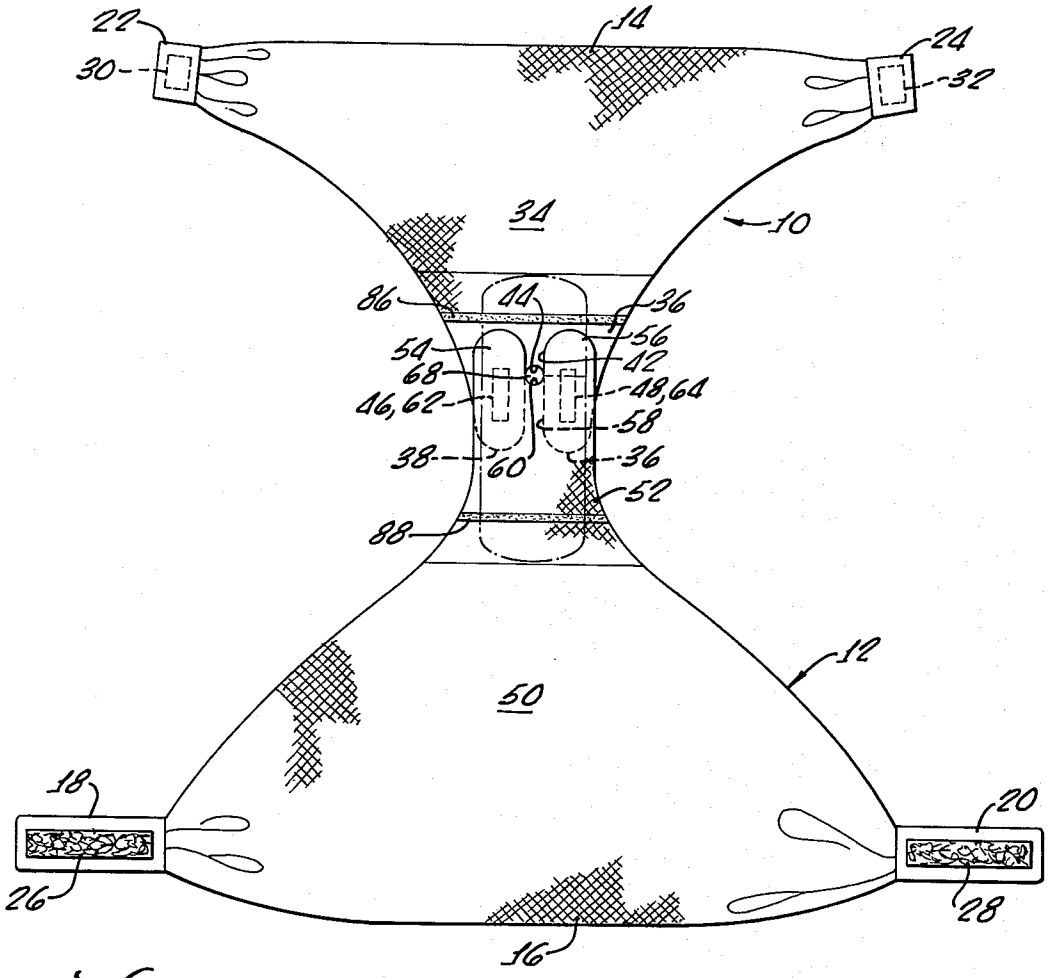
22
14
24
30
32
34
10
86
44
36
56
54
42
68
48,64
46,62
58
38
60
36
52
88
12
50
18
20
26
28
16

FIG. 4.

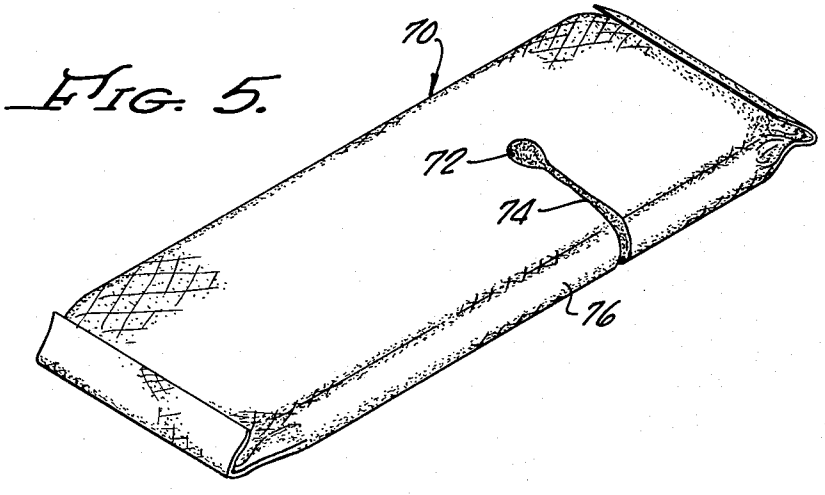
70
72
74
76

FIG. 5.

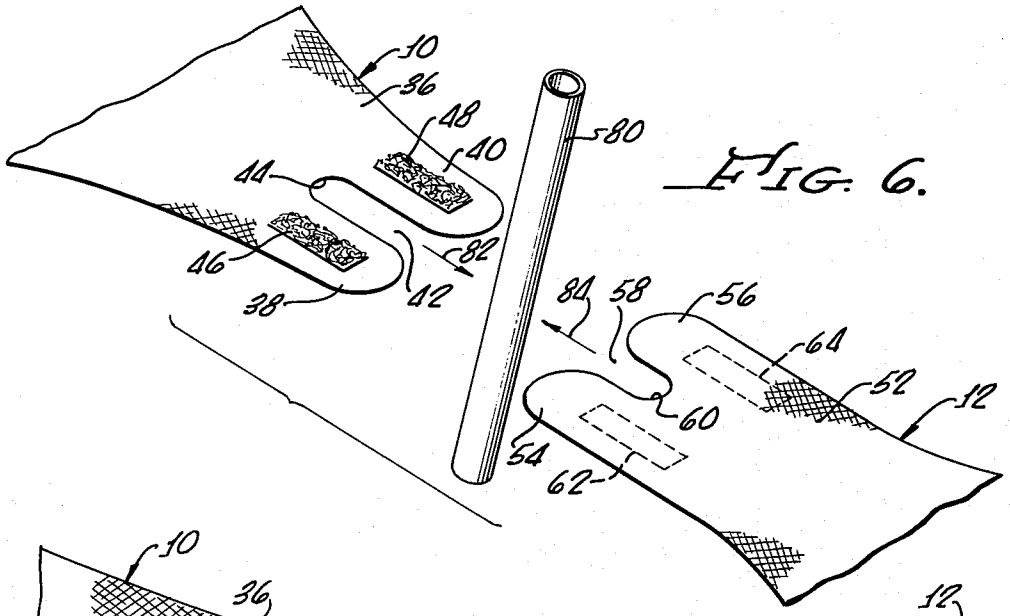

FIG. 6.

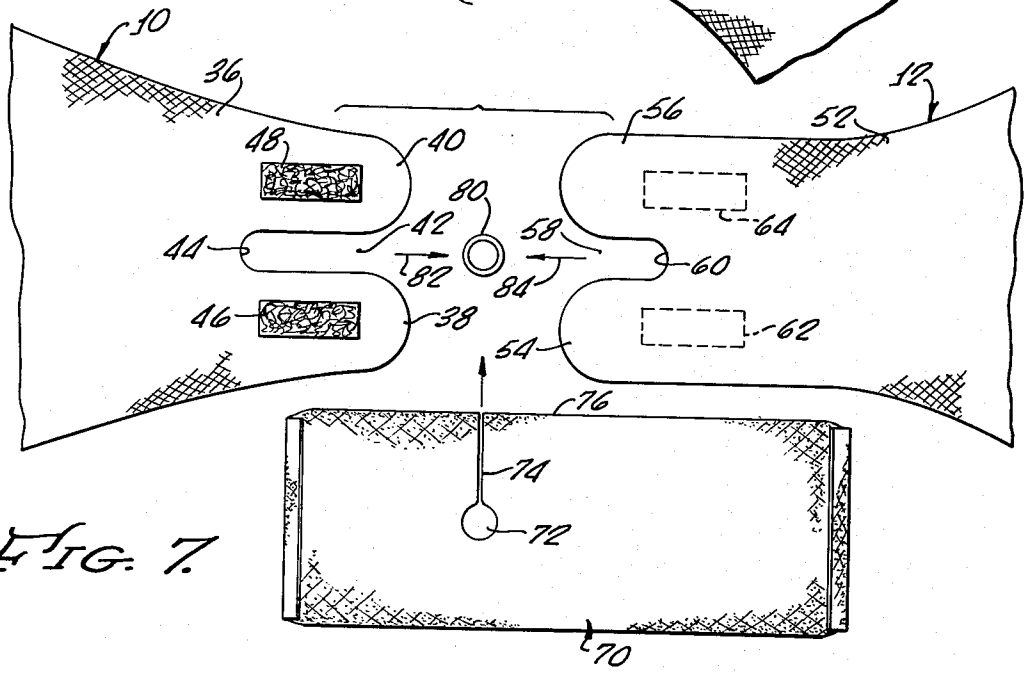

FIG. 7.

FIG. 8.

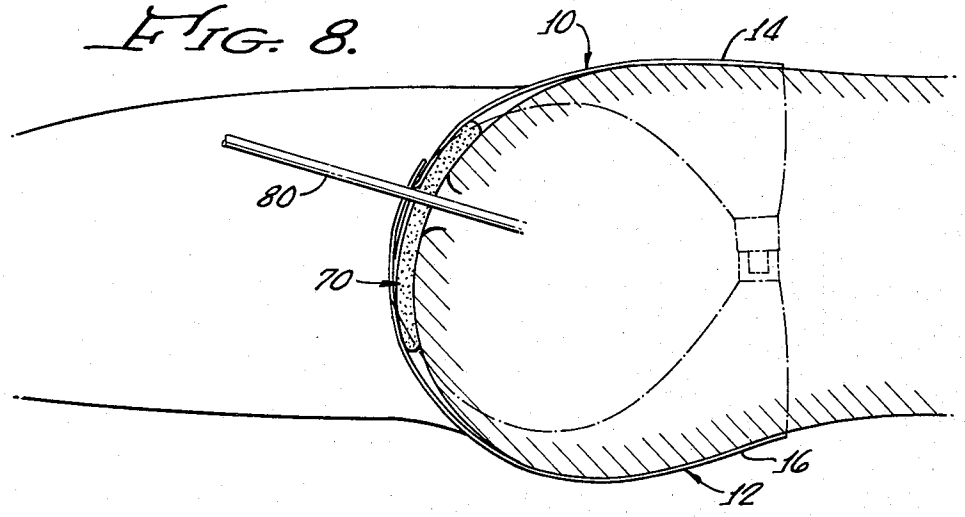

MEDICAL INSTRUMENT RETAINER

BACKGROUND OF THE INVENTION

1. Field of the Invention

The present invention relates to medical instruments and more particularly concerns the retention of an instrument emplaced within a body aperture.

2. Description of Prior Art

In various types of medical operations, and particularly in post-operative procedures, a tubular instrument is emplaced within a body opening to facilitate passage of urine. Such instruments are employed for administration of various fluids into the intestinal tract, for example, and for the drainage and extraction of fluids from body cavities or internal surgical sites. For example, in the relatively frequently performed hysterectomy, postoperative procedure often requires the placement of a catheter within the urethra to facilitate the passage of urine. The catheter will often remain in place for several days or more, being retained in that position continuously or nearly continuously throughout this period. Further, an appropriate dressing or absorbent packing is often placed against the body at and circumscribing the projecting catheter, and such dressing may be changed more frequently than the catheter is removed or is desired to be removed.

In order to minimize both discomfort and pain, the emplaced projecting catheter must be properly positioned. It must be free of disturbing forces and firmly retained in such position so that its movement and the concomitant disturbance of sensitive internal body tissues may be minimized. Garments and dressings heretofore available for permitting the passage of instruments into the body or for positioning such instruments in site are described in U.S. Pat. No. 3,286,713 to Kurtz et al. and U.S. Pat. No. 3,765,401 to Vass. The patent to Kurtz et al merely describes a dressing with a deformable aperture therethrough that may be enlarged to facilitate insertion of a tubular instrument. The patent to Vass describes a belted device for sustaining an instrument devised for administration of fluids into the intestinal tract through the rectum, and embodies an elongated rigid rectangular-section bridge that has a collar and aperture to be slipped over the free end of a projecting, tubular instrument. The apparatus of Vass is believed to be painful and uncomfortable for any lengthy period of use. Both the apparatus of Vass and that of Kurtz et al. require removal or disconnection of the instrument so that it may be inserted through the aperture of the dressing or sustaining belt. Prior devices do not suggest application and removal of dressings and/or dressing-retaining garments without significantly disturbing the projecting instrument.

Accordingly, it is an object of the present invention to provide a medical instrument retainer which minimizes or eliminates the above-mentioned disadvantages.

SUMMARY OF THE INVENTION

In carrying out principles of the present invention in accordance with a preferred embodiment thereof, a retainer is formed of first and second bifurcated panels each having mutually spaced branches defining open-ended slots therebetween. The branches are detachably connected in respective overlapping relation and in mutually opposite orientation along the longitudinal extent of the slots to define an aperture bounded by and between the bight portions of the slots, whereby the retainer may be positioned with its aperture circumscribing an instrument without removing the instrument from the body aperture and without disconnecting the instrument from other apparatus to which it may be connected.

BRIEF DESCRIPTION OF THE DRAWINGS

FIG. 1 is a perspective view of a garment and dressing;

FIG. 2 is a plan view of the front section of the garment of FIG. 1;

FIG. 3 is a plan view of the rear section of the garment of FIG. 1;

FIG. 4 is a plan view of the front and rear sections with connected and overlapping crotch panels;

FIG. 5 is a perspective view of an absorbent pad for use with the retainer garment of FIG. 1;

FIG. 6 is a perspective view of parts of the bifurcated crotch panels moving to or from an operative position;

FIG. 7 is a plan view of bifurcated crotch panels and an apertured dressing moving to or from operative position, and;

FIG. 8 illustrates a retainer garment and pad in operative position.

DETAILED DESCRIPTION

As illustrated in FIGS. **1, 2, 3** and **4,** a retainer garment embodying principles of the present invention is formed of front and back garment sections **10** and **12** cut from a soft, somewhat resilient or elastic fabric. The two sections are substantially similar to each other, the front section being somewhat smaller, and both shaped as illustrated to afford a comfortable fit upon a human body. The two sections have upper portions **14** and **16,** respectively, that extend laterally into body attachment portions **18, 20** and **22, 24.** Body attachment portions **18, 20** of one of the sections, such as, for example, the rear section, are relatively longer than the corresponding portions **22, 24** of the other section, the front section, to provide for adjustability to different waist sizes. The longer attachment portions are provided with elongated connecting devices **26, 28** which may be of any suitable type, such as snap fasteners, buttons or one part of the Velcro fastener. Attachment portions **22, 24** have fixed thereto connecting devices **30, 32** that are complementary to the connecting devices **26, 28,** respectively, and may comprise buttons, button holes, snap fasteners or the second parts of the Velcro fasteners.

Although the upper or waist-encircling sections **14,** 16 of the front and back garment sections are made with detachable waist-encircling connections, it will be readily appreciated that these waist-encircling sections may be continuous and non-detachable since the garment is not to be removed from the waist of the wearer when changing the dressing, as will be more particularly described below.

The front section **10** is formed with an integral frontal apron **34** that provides a relatively narrow bifurcated crotch panel **36** having first and second arms or branches **38, 40** that are laterally spaced from each other to define an elongated open-ended slot **42** terminating at an inward part of the crotch panel in a bight **44.** Fastener parts, such as snap fasteners, buttons or Velcro devices **46, 48** are affixed to arms **38, 40,** respectively, of the bifurcated crotch panel **36.**

The back section, which is similar to the front section, is formed with a dorsal apron **50** and includes a narrowed bifurcated crotch panel **52** having arms **54**, 56 laterally spaced from each other to define a narrow elongated slot **58** terminating at an inner end of the crotch panel in a bight **60**. Fastener parts **62, 64** are fixedly secured to the crotch panel **52** to mate with and detachably connect to the fastener parts **46, 48** of the crotch panel **36**. Velcro-type fastening means are employed in a preferred embodiment for maximum comfort, convenience and adjustability. Both crotch panels, if deemed necessary or desirable, may be formed with a double layer of the material from which the garment is made in order to reinforce this portion of the garment. Similarly, the body attachment portions **18, 20,** 22 and **24** may be reinforced by additional layers of the same or other strengthening material for strengthening the securement of the connecting devices **26, 28, 30** and **32.**

The two crotch sections are substantially identical with each other and are dimensioned and configured so that arm **38** may overlap arm **54,** and arm **40** may overlap arm **56** for a major portion of their length, as illustrated in the plan view of FIG. **4.**

Although the arms or branches overlap for most of their length, the extent of each overlap is less than the full length of the branches, or more specifically, less than the full length of the slots that are defined between adjacent branches of each section. Thus, when the two crotch panels are connected in the overlapping relation illustrated in FIG. **4,** the two bights **44** and **60** are still spaced from each other along the extent of the slots and thus collectively define between the bights a completely closed gripping aperture **68** that is bounded by and between the overlapping branches and opposed bights of the crotch panels.

For use with the retainer garment of FIGS. **1, 2, 3** and **4,** there is provided a dressing or flexible absorbent pad **70** illustrated in FIG. **5.** Pad **70** is a conventional dressing or absorbent pad such as a standard sanitary napkin that is apertured as at **72** and cut to form a slot **74** that extends between the aperture **72** and one edge **76** of the pad. Accordingly, the pad may be distorted to separate the two normally abutting sides of the slot **74** and the pad may be moved laterally relative to a tubular instrument to allow the latter to move transversely of its length along the slot to the aperture **72.** The pad, of course, may be removed with a similar but oppositely directed motion, both being accomplished without disturbing the relation of the tubular instrument with respect to the body aperture from which it may project.

A significant feature of the invention is the ability of the retainer garment to be connected and disconnected from its retaining engagement with a tubular instrument without disturbing the instrument. Thus, as illustrated in the fragmentary view of FIG. **6,** the two crotch panels **36, 52** may be moved to snug engaging relation with respect to a tubular instrument **80** that projects from a body aperture by moving the two crotch panels toward each other, as indicated by arrows **82, 84.** This causes each slot **42, 58** to slide over and transversely of the tube and into overlapping relation with the slot of the other crotch panel until the respective bights **44, 60** snugly engage opposite halves of the exterior of the instrument **80.** Overlapping arms **38, 54** and **40, 56** are now pressed against each other to complete the connection between the several connecting devices **46, 62** and **48, 64.** The tube **80** is now snugly engaged within and retained by the aperture **68** that is bounded by the arms of the two bifurcated crotch panels. The two crotch panels may be pulled relatively tightly against the tube to achieve a snug engagement in which the area of the crotch panel arms adjacent the bights thereof is slightly deformed to cause the material of the crotch panels to engage the external surface of the tube over relatively greater lengths (greater than the thickness of the crotch panel material) of the tube adjacent the crotch panel.

With the two crotch panels in connected overlapping relation, or in the alternative, before the two crotch panels have been joined, the dressing or absorbent pad **70** may be placed about the tube **80.** This is achieved by relative motion of the several parts, as illustrated in the fragmentary plan view of FIG. **7.** Thus, the two crotch panels **36, 52** may be moved as indicated by the arrows **82, 84** in the manner described above and, thereafter, the pad **70** may be interposed between the connected overlapped crotch panels and the body of the garment wearer by pulling the crotch panels away from the wearer's body and laterally sliding the dressing **70** with respect to the tube **80** so that the latter will traverse the opened cut **74** and enter the aperture **72.** Alternatively, the dressing or pad **70** may be placed as described, before the crotch panels are engaged and connected. Thereafter, the crotch panels may be brought together in overlapping relation over the previously emplaced pad **70** and into snug engagement with the tube **80.**

Conversely, the dressing **70** may be removed without detaching the two crotch panels, or the latter may be detached and then the dressing may be removed. In any event, the dressing may be emplaced and removed, and the instrument retaining crotch panels may be emplaced and removed all without either removing the tube from the body aperture or disconnecting the tube from external apparatus to which it may be connected to the body of the wearer, being securely engaged to and about the wearer's waist. The firm securement of the waist or body attaching portions to the wearer's waist, the elasticity of the fit of the garment about the waist and thighs of the wearer and the longitudinally adjustable overlapping of panel arms, all tend to snugly and firmly retain the garment in a fixed position upon the wearer's body. Since the garment as a whole is retained in a fixed position with respect to the wearer's body, the garment aperture **44** is also fixedly positioned. Since the aperture **44** firmly engages the tubular instrument **80,** the latter is firmly retained in appropriate position in the body aperture. The arrangement provides a self-centering of the gripping aperture which, in effect, is formed in place about the emplaced instrument.

The described arrangement for connecting the two crotch panels by moving these toward each other as indicated in FIGS. **6** and **7** automatically adjusts the garment in a proper position upon the wearer so that the crotch panel aperture **44** is properly positioned in snug retaining engagement with the tube **80.**

Although the snug fit of the garment, which is enchanced by the adjustability of the several connecting parts is sufficient in and of itself to retain in position a dressing that is interposed between the crotch panels and the body of the wearer, each garment section may have an elastic band **86, 88** secured at respective ends

of the bands to inner surfaces of the garment adjacent inner ends of the crotch panels. These bands will aid in maintaining a fixed orientation of the dressing **70** and minimize any tendency of the dressing to move angularly about the tube **80** as an axis.

There has been disclosed an improved retainer and dressing for use with a medical instrument placed in a body opening that permits positioning and removal of the garment and the dressing without disturbing the instrument, but enables firm securement and self-centering of the garment upon the tube.

The foregoing detailed description is to be clearly understood as given by way of illustration and example only, the spirit and scope of this invention being limited solely by the appended claims.

What is claimed is:

1. A medical instrument retainer comprising

a first bifurcated panel having first and second mutually spaced branches defining a first open-ended slot therebetween,

a second bifurcated panel having third and fourth mutually spaced branches defining a second open-ended slot therebetween,

each said slot terminating in a bight inwardly of said panel,

means on said branches for detachably connecting said first branch to said third branch and said second branch to said fourth branch in respective overlapping relation, said panels being oppositely oriented relative to each other along the longitudinal extent of the slots to define a gripping aperture between the bights and connected overlapping branches of said panels, whereby said retainer may be positioned with said gripping aperture circumscribing an instrument that extends from a body aperture without removing the instrument from the body aperture and without disconnecting the instrument from other apparatus to which it may be connected.

2. The retainer of claim **1** including a dressing adapted to be positioned between the retainer and the body of a person, said dressing comprising a body of flexible material having an aperture therethrough adapted to be registered with the gripping aperture defined by said two overlapping panels, said body of flexible material being severed between one edge and said aperture thereof, whereby said dressing may be positioned about an instrument extending from a body aperture without removing such instrument from the body aperture.

3. The retainer of claim **2** including means for securing said panels to the body of a person with said branches connected in said overlapping relation.

4. A retainer garment comprising

a front section having first and second body attachment portions and a frontal apron, said frontal apron comprising a first bifurcated panel of the type set forth in claim **1**,

a rear section having first and second body attachment portions and a dorsal apron, said dorsal apron comprising a second bifurcated panel of the type set forth in claim **1**, and

means for securing said front and rear section body attachment portions to each other to secure the garment to the body of a wearer.

5. A medical instrument retainer garment adapted to be secured to the body of a wearer and to retain and position an instrument projecting from a body opening, said garment comprising

a first section having waist securing means at an upper portion thereof and having a first relatively narrow crotch panel at a lower portion thereof, said crotch panel being formed with first and second branches laterally spaced relative to one another to define a first open-ended slot therebetween having a first bight,

a rear section having waist securing means formed at an upper portion and having a second relatively narrow crotch panel formed at a lower portion thereof, said second crotch panel including third and fourth branches laterally spaced from each other to define a second open-ended slot therebetween having a second bight,

said first branch being positioned in overlapping face-to-face contact with said third branch and said second branch being positioned in overlapping face-to-face contact with said fourth branch,

means for detachably connecting said first and third overlapping branches to each other, and

means for detachably connecting said second and fourth overlapping branches to each other.

6. The garment of claim **5** wherein said first and third branches overlap each other for a major portion of their length, wherein said second and fourth branches overlap each other for a major portion of their length, and wherein the extent of said overlapping is less than the full length of at least one of said branches thereto to define between said first and second bights a gripping aperture completely bounded collectively by the overlapping branches of said crotch panels, whereby when said front and rear crotch panels are detached from each other, they both may be moved toward each other transversely of an instrument extending from a body aperture to cause both of said bights to snugly engage said instrument and retain the instrument in position, and whereby said front and rear crotch panels may be detached from one another and moved transversely away from each other for disengagement from said instrument, all without removing the instrument from the body aperture and without disconnecting the instrument from external apparatus to which it may be connected.

7. The garment of claim **5** including a dressing adapted to be interposed between said overlapping crotch panels and the body of the wearer, said dressing having an aperture adapted to register with the aperture defined by said bights of the crotch panels, and a slit extending from said dressing aperture to an edge of said dressing.

* * * * *