(12) INTERNATIONAL APPLICATION PUBLISHED UNDER THE PATENT COOPERATION TREATY (PCT)

(19) World Intellectual Property Organization
International Bureau

(43) International Publication Date
8 May 2003 (08.05.2003)

PCT

(10) International Publication Number
WO 03/038219 A1

(51) International Patent Classification[7]: E05D 3/06, A47L 15/42, F24C 15/02

(21) International Application Number: PCT/EP02/12317

(22) International Filing Date: 1 November 2002 (01.11.2002)

(25) Filing Language: English

(26) Publication Language: English

(30) Priority Data:
0103665-6 2 November 2001 (02.11.2001) SE

(71) Applicant *(for all designated States except US)*: **ELECTROLUX HOME PRODUCTS CORPORATION N.V.** [BE/BE]; Belgicastraat 17, B-1930 Zaventem (BE).

(72) Inventor; and

(75) Inventor/Applicant *(for US only)*: **ANDERSSON, Ingemar** [SE/SE]; Vänsterkroken 39, S-591 72 Motala (SE).

(74) Agent: **SVAHN, Göran**; AB Electrolux (publ.), Group Intellectual Property, S-105 45 Stockholm (SE).

(81) Designated States *(national)*: AE, AG, AL, AM, AT, AU, AZ, BA, BB, BG, BR, BY, BZ, CA, CH, CN, CO, CR, CU, CZ, DE, DK, DM, DZ, EC, EE, ES, FI, GB, GD, GE, GH, GM, HR, HU, ID, IL, IN, IS, JP, KE, KG, KP, KR, KZ, LC, LK, LR, LS, LT, LU, LV, MA, MD, MG, MK, MN, MW, MX, MZ, NO, NZ, OM, PH, PL, PT, RO, RU, SD, SE, SG, SI, SK, SL, TJ, TM, TN, TR, TT, TZ, UA, UG, US, UZ, VN, YU, ZA, ZM, ZW.

(84) Designated States *(regional)*: ARIPO patent (GH, GM, KE, LS, MW, MZ, SD, SL, SZ, TZ, UG, ZM, ZW), Eurasian patent (AM, AZ, BY, KG, KZ, MD, RU, TJ, TM), European patent (AT, BE, BG, CH, CY, CZ, DE, DK, EE, ES, FI, FR, GB, GR, IE, IT, LU, MC, NL, PT, SE, SK, TR), OAPI patent (BF, BJ, CF, CG, CI, CM, GA, GN, GQ, GW, ML, MR, NE, SN, TD, TG).

[Continued on next page]

(54) Title: HINGE STRUCTURE

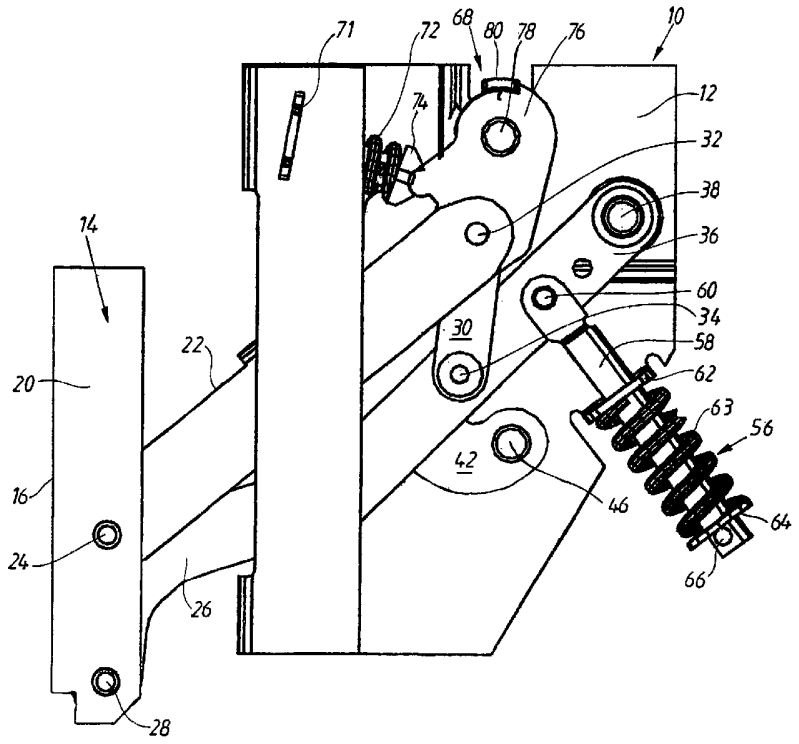

(57) Abstract: A hinge structure (10) for a cooking oven door adapted to be pivoted at its lower end between a first vertical position in which it closes an oven compartment and a second horizontal position in which access is offered to said oven compartment. The hinge structure (10) is mounted in a casing (12) secured to a housing enclosing the oven compartment. The hinge structure (10) further comprise a link mechanism including an upper (22) and a lower link arm (26) each having a first end rotatably connected to the lower side of the door at spaced locations. Opposite ends of the upper and lower arms (22, 26) are interconnected by a further link arm (30) so as to form a hinged parallelogram link system. At its opposite end, said lower link arm (26) has an extension (36) the free end of which is rotatably mounted in the casing (12). The further link arm (30) has the shape of a lever provided with an extension (31) rotatably connected to an additional link arm (42) the opposite end of which being rotatably connected to the casing (12). The hinge structure is effective to cause movement of the door in a direction away from the oven compartment before it is rotated to its second horizontal position. Spring means (56) are provided to counterbalance the door during its movement between the first and second positions. Moreover, a door holding mechanism (68) is provided which has a first working position in which the door is biased against the oven compartment and a second working position in which the door is left partly open.

WO 03/038219 A1

Published:
— *with international search report*

For two-letter codes and other abbreviations, refer to the "Guidance Notes on Codes and Abbreviations" appearing at the beginning of each regular issue of the PCT Gazette.

Hinge Structure

The present invention generally relates to hinge arrangements and more specifically the invention refers to a hinge structure for a cooking oven door adapted to be pivoted at its lower end between a first vertical position in which it closes an oven compartment and a second horizontal position in which access is offered to said oven compartment, said hinge structure being mounted in a casing secured to a housing enclosing the oven compartment, said hinge structure further comprising a link mechanism including an upper and a lower link arm each having a first end rotatably connected to the lower side of the door at spaced locations, opposite ends of the upper and lower arms being interconnected by a further link arm so as to form a hinged parallellogram link system.

In cooking ovens for built-in purposes or included in a free-standing cooker there is a more and more expressed wish to reduce the temperature of the outer surface of the door which calls for thicker door constructions comprising three or even four or more oven panes. In connection with a free-standing cooker, for example, such door will have an extensive thickness causing problems when the door is to be pivoted between its closed and open positions, respectively. Often, the door is surrounded by side walls, control panels or a door for a second oven compartment making impossible for a thick door to be pivoted between closed and open position without contacting the surrounding surfaces.

A solution to the problem is disclosed in GB 758932 which describes a hinged door for a cabinet in which the door is pivotably mounted at the lower end thereof and a hinge structure operates the pivot axis to move away from an oven compartment at the same time as the door is pivoted about the same axis. Similar arrangements are shown in GB 1056631, US 2698957 and US 2800128.

Another problem associated with cooking oven doors is that spring means arranged to counterbalance the door during its movement between closed and open positions are used also to assist in pressing the door against a sealing or the like surrounding the oven compartment. Normally, the hinge structure is disposed at the lower side of the door which means that special measures have to be taken to secure that the upper part of the oven door is pressed against the sealing in the same way as the lower part of the door.

CONFIRMATION COPY

Accordingly, it is a first object of the invention to provide a hinge structure for a cooking oven door which permits the door to be moved between its open and closed positions without being obstructed by surrounding panels, doors or the like. Moreover, it is a second object of the invention to provide an arrangement which can assist the counterbalance spring arrangement in pressing the upper part of the oven door against the oven compartment sealing.

A further object with the invention is to provide means which permit the door, in addition to the closed and open positions, to take a further position in which the door is partly open. The latter position can then be used for ventilation of the oven compartment.

The objects indicated above are achieved by a hinge structure which has got the characterizing features indicated in the appending claim 1. Preferred embodiments are included in the accompanying sub-claims.

The invention will now be described more in detail in connection with an embodiment with reference to the drawings, in which:

Fig. 1 shows a side view of a hinge structure according to the invention;

Fig. 2a shows a rear view of a supporting element to be fixed to the oven door;

Fig. 2b shows a top view of the supporting element of Fig. 2a with parts remote from the door omitted;

Fig. 3 shows part of the hinge structure of Fig. 1 seen from the opposite side, and

Fig. 4 shows a simplified view of the hinge structure of Fig. 1 with the door in open position.

With reference to Figs. 1-4 an embodiment is shown of a hinge structure intended to support a cooking oven door permitting it to move between a first vertical position in which ist closes an oven compartment and a second horizontal position in which acess is offered to said oven compartment. The cooking oven with its door has not been shown in the drawings and the positions of the door can be imagined by study of the positions of a support member included in the hinge structure and secured to the inside of the door.

The hinge structure 10 is mounted in a casing 12 intended to be secured to a housing enclosing the oven compartment. The hinge structure comprises an elongate supporting member 14 intended to be fixedly secured to the inner side of the cooking oven door at the lower end

thereof. The member 14 has a U-shaped section with a front wall 16 secured to the door and two side walls 18, 20 extending therefrom. An upper link arm 22 is rotatably mounted to the member 14 by a joint 24 and, correspondingly, a lower link arm 26 is rotatably mounted to the member 14 by a joint 28. The two joints 24, 28 are disposed at spaced locations along the elongate supporting member 14. At the opposite end the upper link arm 22 is rotatably connected to the lower link arm 26 by a further link arm 30 rotatably mounted to the upper link arm 22 by a joint 32 and to the lower link 26 arm by a joint 34. The upper link arm 22, the lower link arm 26, the supporting member 14 and the further link arm 30 form together a hinged parallellogram link system.

The lower link arm 26 has an extension 36 the free end of which is rotatably mounted in the casing 12 by a joint 38. As best seen in Fig. 3, the further link arm 30 has the shape of a lever having an extension 31 which is rotatably connected to an additional link arm 42 the opposite end of which is rotatably mounted in the casing by a joint 46.

With reference to Figs. 2a and 2b the connection of the upper and lower link arms 22, 26 to the elongate supporting member 14 is shown more in detail.
The upper link arm 22 comprises two parallell legs 48, 50 which are joined to the member 14 so as to form an open space between the two legs 48, 50. In this open space the lower link arm 26 is allowed to move in a way unobstructed by the upper link arm 22. The lower ends 52, 54 of the member 14 are bent inwards to provide lateral guidance for the lower link arm 26 which has the shape of a single bar and is joined to the member 14 centrally in the space between the legs 48, 50.

In order to counterbalance the cooking oven door during its movements between the closed and open positions a spring arrangement 56 is provided. The arrangement comprises a rod 58 at one end rotatably connected to the lower link arm 26 by a joint 60. The rod 58 is slidably guided in a bracket 62 formed by a lug extending laterally from the casing and provided with a suitable hole. A helical spring 63 is disposed on the rod 58 and biased between the bracket 62 and a washer 64 disposed at the free end of the rod 62 and locked in place by a locking pin 66.

The spring arrangement 56 also serves to provide a force acting to secure that the door in the

closed position is sealingly pressed against a gasket surrounding the access opening of the oven compartment. In order to give further assistance a door holding mechanism 68 is provided which is effective to press the upper part of the door towards the gasket, not shown, and in addition to provide a further position for the door in which it is left partly open for ventilation purposes.

The door holding mechanism 68 comprises a rod 70 slidingly guided in a bracket 71 and supporting a helical spring 72. The spring 72 is biased between the bracket 71 and a washer 74 rotatably cooperating with a trip arm 76 pivotably journalled in the casing 12 by a joint 78. The rotational movement of the trip arm 76 is limited by a stop 80. The door holding mechanism has two working positions one of which is shown in Fig. 1. In this position the spring 72 acts to press the trip arm 76 in a counter-clockwise direction assisting the spring arrangement 56 in pressing the upper part of the oven against the oven compartment sealing. the door holding mechanism also has a second operating position in which the door is left partly open. This second working position is shown in fig. 4. As appears in this figure the door holding mechanism 68 is connected to the upper link arm 22 via an recess 77 provided on the trip arm76 which cooperates with a suitable pin provided on the upper link arm 22 concentric with the joint 32.

The hinge structure described above operates in the following way.

Assuming that the door is in its closed position the various parts of the hinge structure have taken the positions indicated in Fig. 1. When the door is to be moved to its open position a handle provided on the upper part of the oven door, not shown, is operated and the lower part of the door is moved away from the oven compartment in a horizontal direction as much as needed for the following turning movement to take place without any obstruction caused by adjacent panels or the like. At the same time the door is slightly rotated and the upper link arm 22 operates the trip arm 76 to rotate in clockwise direction pushing the spring and rod assembly 70, 72 upwards beyond an intermediate trip point to the second working position in which the spring and rod assembly 70, 72 of the door holding mechanism 68 is made inactive. In this position the door holding mechanism only acts to define the further position of the door in which it is left partly open for ventilation purposes.The further movement of the door towards its fully open position, shown in Fig. 4, involves a turning movement and an upward

movement of the joint 28 to cause the outer door surface to align with the upper edge of an additional door or other panel situated below the cooking oven door. During the movement of the door to its fully open position the link arms 22, 26, 30, 42 cooperate to effect the desired movement of the door to said open position. To this end the arms 30 and 42 has got the shape indicated in Fig. 3. During this movement the spring arrangement 56 operates to counterbalance the door weight to make the movement easier for the user.

When the door is to be moved from open to closed position the handle is again operated and the door lifted to the further position in which the door is left partly open. In order to complete the movement to fully closed position the handle is pushed so that the holding mechanism 68 is operated to move the spring and rod assembly 70, 72 downwards to rotate the trip arm 76 in counterclockwise direction. When the trip position has been passed the spring 72 will act to move the trip arm 76 to the first operating position of the door holding mechanism 68 and the door has then been returned to its closed position shown in Fig. 1.

Claims

1. A hinge structure (10) for a cooking oven door adapted to be pivoted at its lower end between a first vertical position in which it closes an oven compartment and a second horizontal position in which access is offered to said oven compartment, said hinge structure (10) being mounted in a casing (12) secured to a housing enclosing the oven compartment, said hinge structure (10) further comprising a link mechanism including an upper (22) and a lower link arm (26) each having a first end rotatably connected to the lower side of the door at spaced locations, opposite ends of the upper and lower arms (22, 26) being interconnected by a further link arm (30) so as to form a hinged parallellogram link system, **characterized** in that, at its opposite end, said lower link arm (26) has an extension (36) the free end of which is rotatably mounted in the casing (12), and that the further link arm (30) has the shape of a lever provided with an extension (31) rotatably connected to an additional link arm (42) the opposite end of which being rotatably connected to the casing (12), said hinge structure effecting the door to move in a direction away from the oven compartment before being rotated to its second horizontal position, spring means (56) being provided to counterbalance the door during its movement between the first and second positions, and a door holding mechanism (68) being provided having a first working position in which the door is biased against the oven compartment and a second working position in which the door is left partly open.

2. Hinge structure according to claim 1, **characterized** in that the spring means (56) comprises a rod member (58) slidably guided in a bracket (62) formed in the casing or joined thereto, at one end said rod (58) being pivotably joined to the lower link arm (26) and at the opposite end provided with a stop member (64, 66), a helical spring (63) being mounted on the rod (62) to be clamped between the stop member (64, 66) and the bracket (62).

3. Hinge structure according to claim 1, **characterized** in that the door holding mechanism comprises a pivot arm (76) biased by a spring arrangement (70, 71, 72, 74) towards either working position of the mechanism, which are defined by suitable stop members (80), said pivot arm (76) having a recess (77) cooperating with a suitable pin (79) provided on the upper link arm (22).

4. Hinge structure according to claim 3, **characterized** in that the pin (79) is mounted concentric with the connecting point (32) between the upper link arm (22) and the further link arm (30).

5. Hinge structure according to claim 3 or claim 4, **characterized** in that the pivot arm (76) is adapted during movement from one working position to the other to pass a trip point in which the biasing force changes direction from said first working position to said other working position.

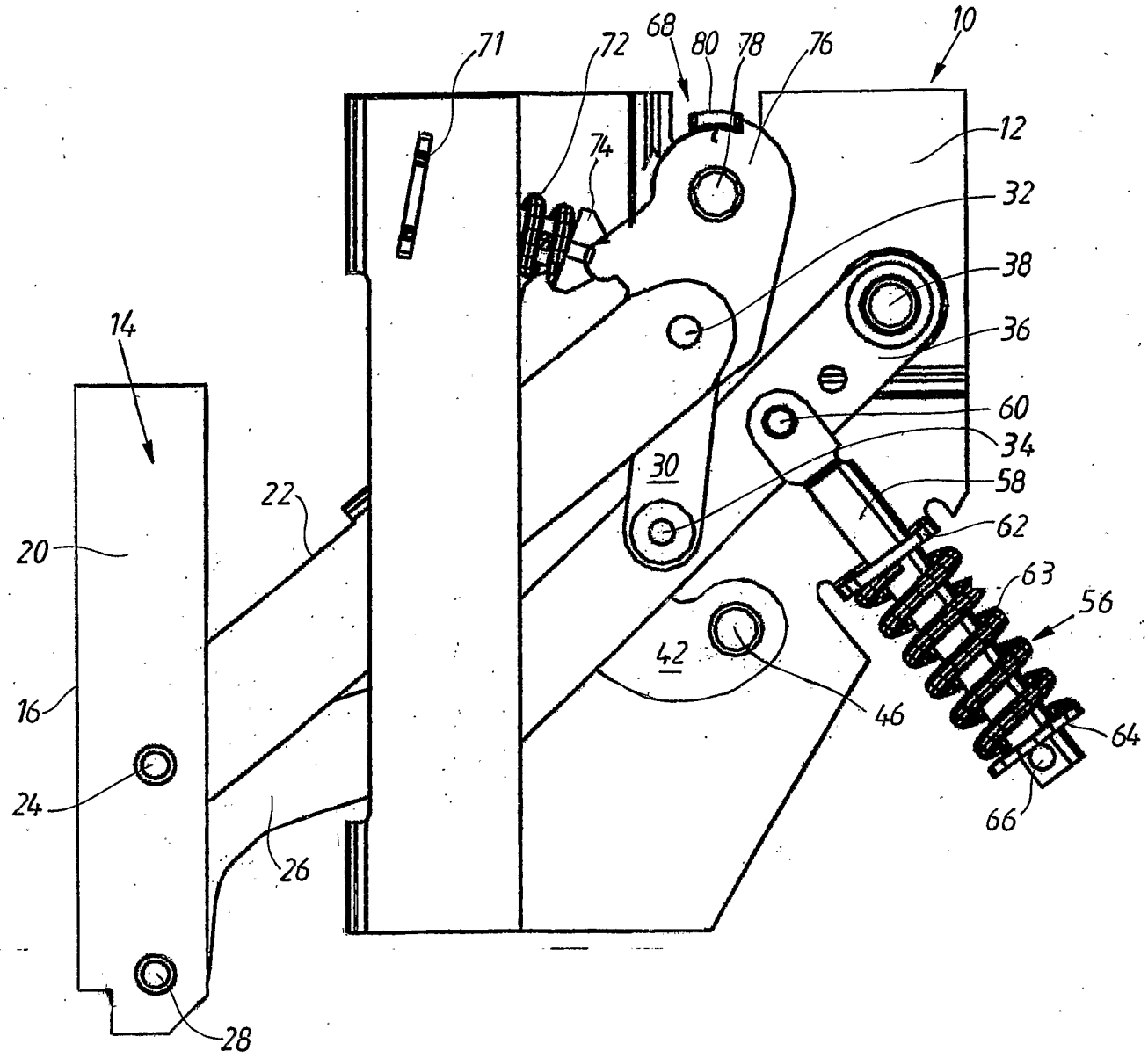
10
12
14
16
20
22
24
26
28
30
32
34
36
38
42
46
56
58
60
62
63
64
66
68
71
72
74
76
78
80

FIG.1

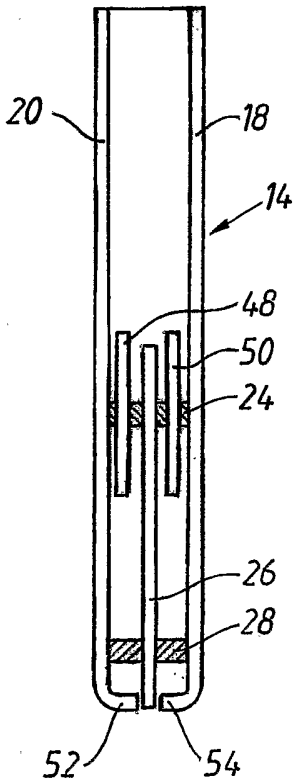

FIG. 2a

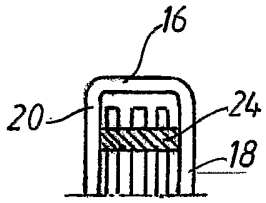

FIG. 2b

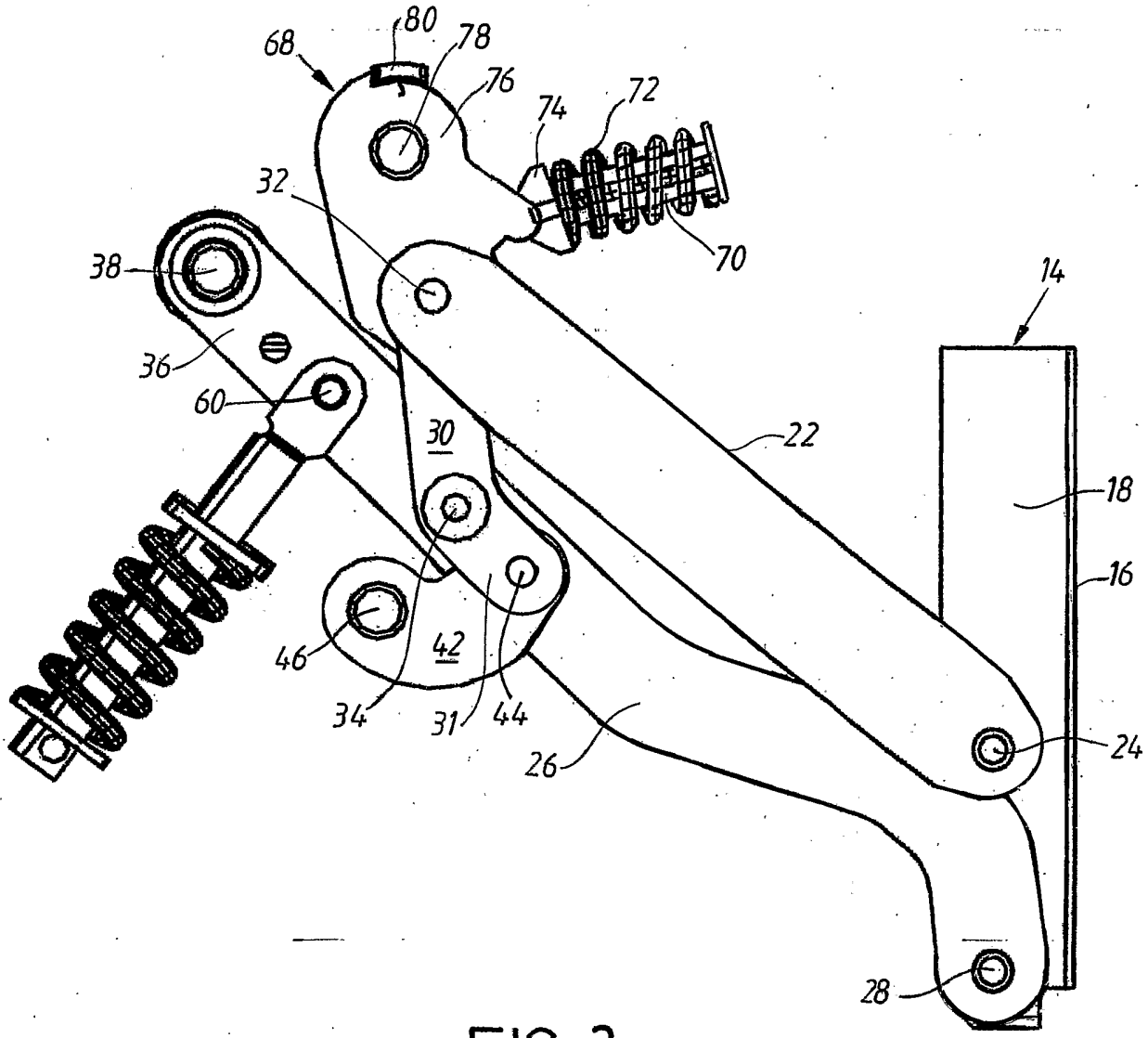

FIG. 3

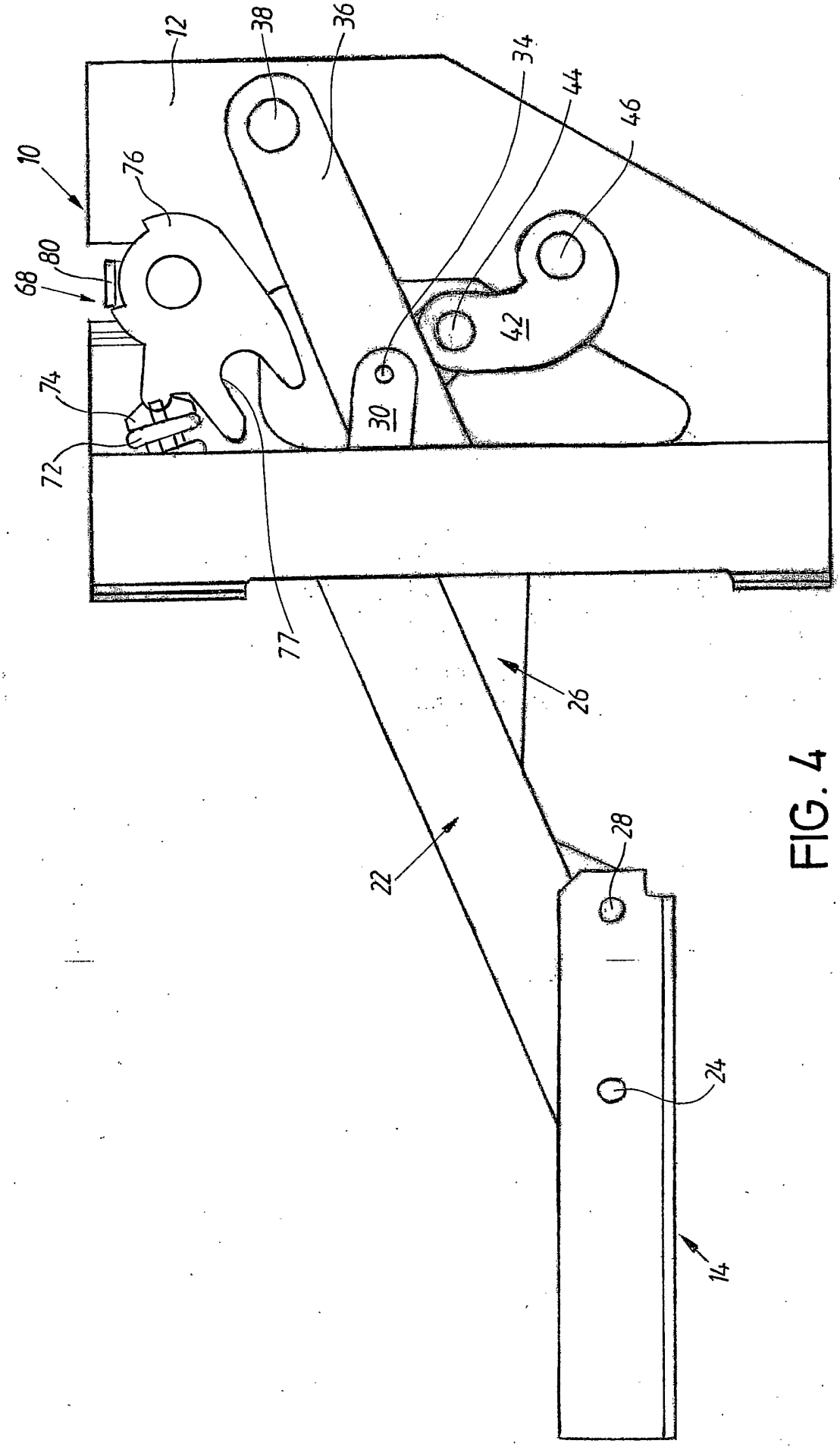

FIG. 4

INTERNATIONAL SEARCH REPORT

International Application No
PCT/EP 02/12317

A. CLASSIFICATION OF SUBJECT MATTER
IPC 7 E05D3/06 A47L15/42 F42C15/02

According to International Patent Classification (IPC) or to both national classification and IPC

B. FIELDS SEARCHED

Minimum documentation searched (classification system followed by classification symbols)
IPC 7 E05D A47L F42C

Documentation searched other than minimum documentation to the extent that such documents are included in the fields searched

Electronic data base consulted during the international search (name of data base and, where practical, search terms used)
EPO-Internal

C. DOCUMENTS CONSIDERED TO BE RELEVANT

Category °	Citation of document, with indication, where appropriate, of the relevant passages	Relevant to claim No.
Y	EP 0 859 197 A (C M I S R L) 19 August 1998 (1998-08-19) the whole document ---	1,2
Y	US 2 698 957 A (TRYGVE VIGMOSTAD) 11 January 1955 (1955-01-11) the whole document ---	1,2
Y	US 3 842 542 A (NOWOSIELSKI P ET AL) 22 October 1974 (1974-10-22) the whole document ---	1
Y	DE 90 00 217 U (NUOVA STAR S.R.L.) 31 May 1990 (1990-05-31) the whole document ---	2
	-/--	

[X] Further documents are listed in the continuation of box C.

[X] Patent family members are listed in annex.

° Special categories of cited documents :

"A" document defining the general state of the art which is not considered to be of particular relevance

"E" earlier document but published on or after the international filing date

"L" document which may throw doubts on priority claim(s) or which is cited to establish the publication date of another citation or other special reason (as specified)

"O" document referring to an oral disclosure, use, exhibition or other means

"P" document published prior to the international filing date but later than the priority date claimed

"T" later document published after the international filing date or priority date and not in conflict with the application but cited to understand the principle or theory underlying the invention

"X" document of particular relevance; the claimed invention cannot be considered novel or cannot be considered to involve an inventive step when the document is taken alone

"Y" document of particular relevance; the claimed invention cannot be considered to involve an inventive step when the document is combined with one or more other such documents, such combination being obvious to a person skilled in the art.

"&" document member of the same patent family

Date of the actual completion of the international search	Date of mailing of the international search report
3 January 2003	20. 01. 2003

Name and mailing address of the ISA	Authorized officer
European Patent Office, P.B. 5818 Patentlaan 2 NL - 2280 HV Rijswijk Tel. (+31-70) 340-2040, Tx. 31 651 epo nl, Fax: (+31-70) 340-3016	CHRISTER WENDENIUS/JA

Form PCT/ISA/210 (second sheet) (July 1992)

INTERNATIONAL SEARCH REPORT

International Application No
PCT/EP 02/12317

C.(Continuation) DOCUMENTS CONSIDERED TO BE RELEVANT

Category °	Citation of document, with indication, where appropriate, of the relevant passages	Relevant to claim No.
A	GB 1 329 936 A (UNITED FILTRATION CORP) 12 September 1973 (1973-09-12) the whole document ---	1-5
A	US 2 800 128 A (CHESSER CECIL E) 23 July 1957 (1957-07-23) the whole document ---	1-5
A	EP 0 702 122 A (MERLONI ELETTRODOMESTICI SPA) 20 March 1996 (1996-03-20) the whole document -----	1-5

INTERNATIONAL SEARCH REPORT

Information on patent family members

International Application No
PCT/EP 02/12317

Patent document cited in search report	Publication date	Patent family member(s)	Publication date
EP 0859197 A	19-08-1998	IT B0970069 A1	17-08-1998
		EP 0859197 A2	19-08-1998
US 2698957 A	11-01-1955	NONE	
US 3842542 A	22-10-1974	NONE	
DE 9000217 U	31-05-1990	IT 216415 Z2	31-07-1991
		DE 9000217 U1	31-05-1990
GB 1329936 A	12-09-1973	NONE	
US 2800128 A	23-07-1957	NONE	
EP 0702122 A	20-03-1996	IT T0940720 A1	13-03-1996
		EP 0702122 A1	20-03-1996