April 9, 1929. F. W. HUEMPFNER 1,708,725

GUMMED TAPE DISPENSER

Filed Oct. 2, 1926

Fig. 1.

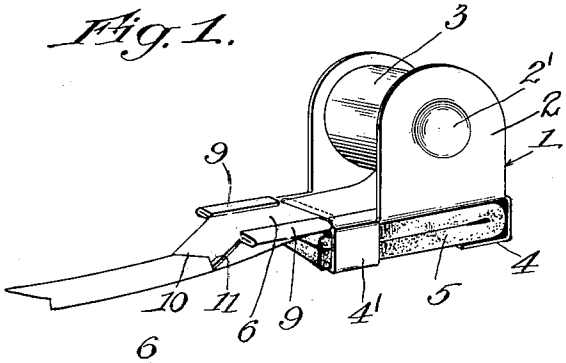

Fig. 2.

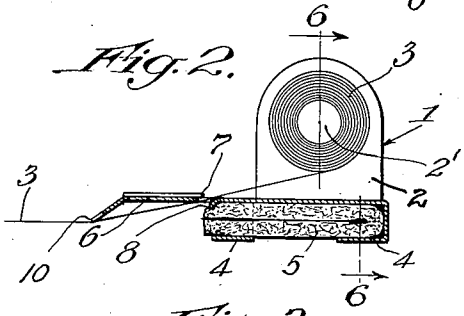

Fig. 5.

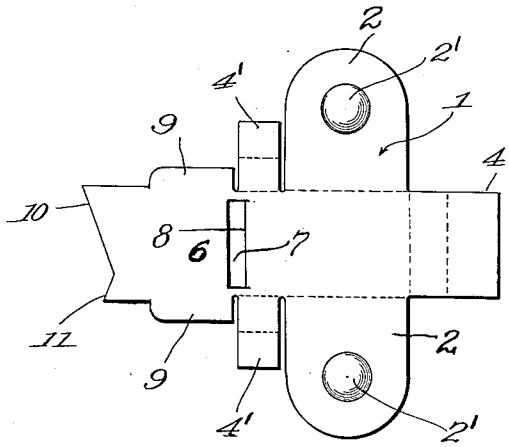

Fig. 3.

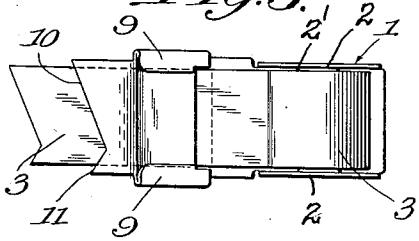

Fig. 4.

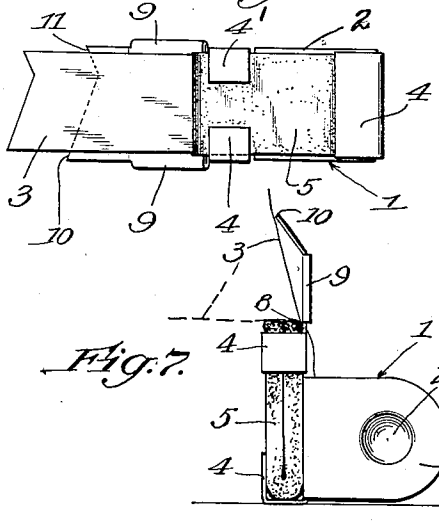

Fig. 6.

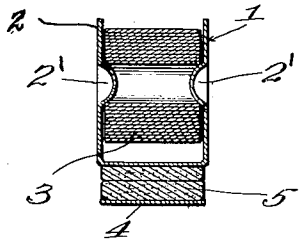

Fig. 7.

Inventor:
Ferdinand W. Huempfner.
By Mason Fenwick & Lawrence
Attys.

Patented Apr. 9, 1929. 1,708,725

UNITED STATES PATENT OFFICE.

FERDINAND W. HUEMPFNER, OF OAK PARK, ILLINOIS.

GUMMED-TAPE DISPENSER.

Application filed October 2, 1926. Serial No. 139,138.

This invention relates to a novel gummed tape dispenser, and the object thereof is to provide a portable, small tape holder, moistener and dispenser with a cutting device or edge permitting the tape to be torn off in suitable lengths in a moist condition for use, the device forming a relatively cheap article of stationery for individual use which may be conveniently carried or arranged within a desk drawer for office use.

Further object of the invention is to provide a novel structure in which the holding and dispensing means for the roll of tape is combined with a moistening pad in position to moisten the gummed side of the tape as the latter is drawn off in proper lengths restrained by friction within the holder and having a guide slot for restraining its movement and guiding the same over the moistener pad, together with a knife or cutting edge to facilitate cutting of the tape at the proper point according to the length of the tape desired for use.

Another object is to provide a cutting edge that will completely sever the tape when it is pulled across the cutting edge. It is well known in the art to have means for severing the tape after it has been moistened, but where a cutting edge is utilized and the tape pulled across the cutting edge, it is practically impossible to completely sever the tape, as the cutting operation must start at one edge of the tape and before the operation is completed, the remainder of the tape has been pulled off the cutting edge. To remedy this I have caused a small portion of the cutting blade to be set at an angle to the rest of the cutting edge. By so doing I obtain a complete severance of the tape as the same will not slide from the cutting edge when the cutting operation is instituted.

Another object is to provide a structure made from a single blank of novel construction.

Still another object is to provide a pad in which there will be constant capillary action.

Other objects will be disclosed in the specification and drawings.

In the drawings:

Figure 1 is a perspective of the tape holder, dispenser and moistener.

Figure 2 is a sectional side elevation.

Figure 3 is a top plan of the device.

Figure 4 is a bottom plan of the tape dispenser.

Figure 5 is a plan of the blank from which the device is produced, opened out.

Figure 6 is a cross-section taken on the staggered section line 6—6 of Figure 2, and

Figure 7 is a side elevation of the same showing the position in which the dispenser is usually held when the tape is drawn across the face of the pad and across the cutting edge.

The tape holder, dispenser and moistener comprises an integral structure 1 by which the device is generally designated and is preferably produced from a blank having side extensions or wings 2 folded upwardly along parallel side edges indicated by the dotted lines in Figure 5. The extensions or side portions 2 are bent in the same direction at right angles to the body portion which is of rectangular formation and are disposed in parallel relation and preferably provided with convexly rounded ends as shown. The side portions have central inward depressions 2′ which frictionally engage the central portion of the roll of tape 3 and form a support for the roll while retaining the same in position and permitting it to turn without being released or dropping out of position over the central body portion. The blank has an end portion 4 projecting beyond the adjacent edges of the sides 2 which is bent in the opposite direction at right angles to the body portion and then again at right angles parallel thereto as indicated by the dotted lines in Figure 5 and as clearly shown in the other views of the drawings forming a down turned edge. Additional side extensions 4′ are provided in front of the forward edges of the side extensions or wings 2 and in slightly spaced relation or severed therefrom, these side extensions 4′ being also bent at right angles to the parallel side edges of the body portion of the blank and then again at right angles inwardly. By the holding means thus provided in conjunction with the rear extension 4, a moistener pad 5 of felt or other suitable materials is held. This felt may be a single piece or a folded length as shown and is disposed so that its bent end is up against the part 4 and its opposite ends project beyond the forward edges of the side extensions or tongue 4′ as clearly shown in the drawings.

The body of the blank at the intermediate portion between the side extensions 2 which form the tape holder is provided with a projection or extension 6 having a transverse slot or aperture 7 through which the tape 3

is adapted to feed from the roll. The portion 6 is preferably wider than the bottom and the cut out portion forms a down turned flange 8 which serves to hold the pad 5 in place and prevents the moisture from the said pad at its projecting front portion from coming in contact with the tape 3 at its gummed side when the same is not in use. Along the sides of the projection 6 are reinforcing plates 9, these being simply formed by bending over the side edges of the extension or projection 6 upwardly and inwardly which stiffens and reinforces the same as well as obviates sharp edges which would be likely to cause injury to the user. The forward portion of the projection 6 is bent slightly at an angle in the direction of the pad, that is in a direction opposite to the extensions 2 and forms a cutting edge 10 with a blade portion set at an angle to the rest of the blade as at 11. That is, the cutting edge or blade is set at an angle and a portion 11 is set at an opposite angle so that the tape can be presented against either cutting edge, that is, the sharp corner at either side to initially cut the same. This is to start the cut at the sides of the tape whereby it may be completely cut after being moistened. While the short edge may be used for this purpose, it is preferable to start the cut on the pointed end at the outer side of the edge 10 and then draw the tape across the edge when it will be caught on the edge portion 11 extending at an obtuse angle with respect thereto so that the tape will be prevented from tearing and will be immediately severed at this point.

By making the tape dispenser out of a single blank a great saving in production and manufacture is obtained. By folding the pad and placing the two ends to contact with the tape, a much greater moistening surface is obtained and at the same time complete capillary action is retained. The flange 8 serves a double purpose of not only preventing the pad 5 from working forward but serves to prevent moisture from seeping up into the tape and wetting same before it is desired to use the tape.

As actually used the pad will be moistened, the tape drawn across the face of the pad and then pulled across the cutting edge. The tape will be retained on the cutting edge by reason of the small section of the blade set at an angle to the rest of the cutting edge which insures a complete severance of the tape.

While I have described my invention in a preferred form, it is to be understood that various modifications may be made within the limits of the description and that the parts may be varied in proportion and arrangement as shall be determined by the scope of the following claims.

Having thus described my invention what I claim is:

1. A tape holder, moistener and dispenser, formed of a blank including a body portion with side extensions bent at right angles in the same direction parallel to each other, said extensions having central depressions to frictionally hold a roll of tape therein and permit the same to be unrolled, said body portion having a rear end extension and side extensions in front bent opposite to the first extensions in angular relation to receive and hold a moistener pad therein against the opposite side of the body portion, an extension at the front of the body portion having a guide slot through which the tape extends to move in contact with the pad to moisten the gummed side of the tape, and a diagonal cutting edge at the end of the front extension, with one end portion set at an intersecting angle.

2. A tape dispenser comprising a body portion, a pad support and a pad, a flange disposed intermediate the pad and body portion, adapted to secure said pad and prevent moisture from seeping up and wetting the tape when same is not in engagement with said pad.

3. A tape holder, moistener and dispenser formed of a blank including a body portion with side extensions designed to hold a roll of tape therebetween and permit the same to be unrolled, said body portion having a rear extension and side extensions bent to receive and hold a moistener pad therein against the body portion, an extension at the front of the body portion having guiding means for the tape and holding the same in contact with the pad to moisten the gummed side of the tape as dispensed, and a cutting edge at the front end of the extension.

4. A tape holder, moistener and dispenser, comprising a body portion with side extensions designed to hold a roll of tape and to permit the same to be unrolled, said body portion having a rear end and side portions bent in spaced relation to the body to receive and hold a moistener pad therein against the bottom of the body portion, said body portion being turned down against the moistener pad to form a flange, and an extension at the front of the body portion having a guide slot through which the tape extends to move in contact with a pad for moistening gummed side of the tape, and a cutting edge at the front end extending down at an angle for cutting the tape.

In testimony whereof I affix my signature.

FERDINAND W. HUEMPFNER.