J. F. MEAD.

PLOWS.

No. 193,983. Patented Aug. 7, 1877.

Fig. 1.

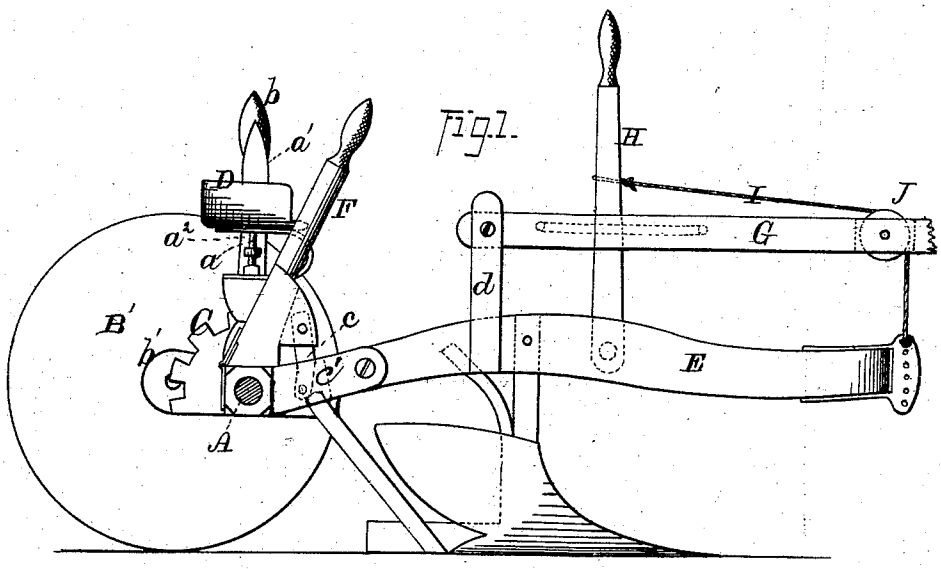


Fig. 2.

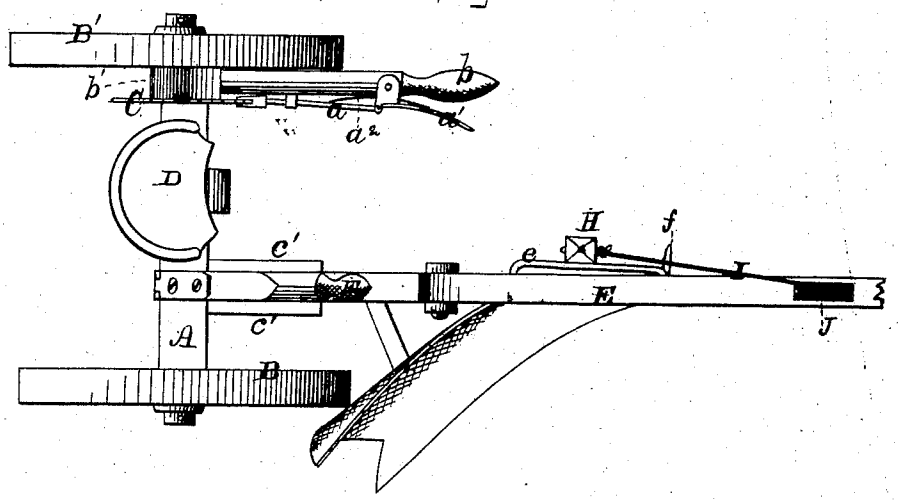


WITNESSES

Jas. E. Hutchinson.

J. Wm. Wiston.

John F. Mead

INVENTOR

Edmund Brooks

ATTORNEYS

N. PETERS, PHOTO-LITHOGRAPHER, WASHINGTON, D. C.

# UNITED STATES PATENT OFFICE.

JOHN F. MEAD, OF DE KALB, ILLINOIS.

## IMPROVEMENT IN PLOWS.

Specification forming part of Letters Patent No. **193,983**, dated August 7, 1877; application filed June 28, 1877.

*To all whom it may concern:*

Be it known that I, JOHN F. MEAD, of De Kalb, in the county of De Kalb and State of Illinois, have invented certain new and useful Improvements in Plows; and I do hereby declare that the following is a full, clear, and exact description thereof, which will enable others skilled in the art to which it appertains to make and use the same, reference being had to the accompanying drawings, and to the letters of reference marked thereon, which form a part of this specification, and in which—

Figure 1 is a side elevation of my improved plow, and Fig. 2 is a plan view of the same.

Corresponding parts in the two figures are denoted by like letters.

This invention relates to a certain improvement in plows, particularly of that class termed sulky-plows; and it consists of mechanism for inserting the plow into the ground at the running depth, substantially as hereinafter more fully set forth.

In the annexed drawing, A refers to an axle, upon one end of which is a wheel, B, and pivoted to the other end is a lever, *b*, having an arm, *b'*, provided with a short axis having a wheel, B'. A toothed segment, C, is also attached to the lever end of the axle A to receive a detent, *a*, upon the lever *b*, in order to retain the said lever in position. The upper end of the detent or rod *a* is pivoted or hinged to a lever, $a^1$, pivoted to the hand-lever *b*, and pressed upon by a spring, $a^2$, to retain the said detent in between the teeth of the segment C.

By pressing upon the lever $a^1$ the said detent will be retracted or disengaged from the toothed segment C, in order to vary the relative position of the axle and the wheel B' upon the land-side as the wheel B sinks into the furrow, and thus cause the axle to maintain a horizontal position.

Upon the axle A is mounted the driver's seat D. E is the plow-beam, pivoted, a short distance from its rear end, to forward-projecting arms *c' c'* of axle A, and preferably slotted at said end to receive and permit of the attachment thereto of a link or plate, *c*, pivoted or connected to a lever, F, hinged or pivoted to the axle A.

By this arrangement it will be seen that, by moving or pressing the lever F backward, the heel of the plow, attached in the usual manner to the beam E, will be elevated, so as to cause its point to be inclined and inserted into the ground upon commencing to plow.

G is the tongue, pivoted to a standard, *d*, secured upon the beam E. H is a lever, fulcrumed to the beam E, and extending up alongside the tongue G between two stops, *e f*, upon the said tongue. A rope or chain, I, or its equivalent, is attached to the forward end of the beam E, and passes up over a pulley, J, in the tongue, and is attached to the lever H.

It will be observed that by moving the lever H rearwardly the forward end of the beam E will be elevated, which, in turn, will lift the plow-point out of the ground, and thus stop the operation of plowing.

Having thus described my invention, what I claim, and desire to secure by Letters Patent, is—

The combination of the axle A, having the forward-projecting arms *c' c'*, the plow-beam E, pivoted to axle-arms *c' c'*, and the elbow-lever F, hinged to the axle and linked to the rear end of the plow-beam, substantially as shown and described.

In testimony that I claim the foregoing as my own I hereunto affix my signature in presence of two witnesses.

JOHN F. MEAD.

Witnesses:

JOSEPH MEAD,

NORRIS SWEET.