(12) INTERNATIONAL APPLICATION PUBLISHED UNDER THE PATENT COOPERATION TREATY (PCT)

(19) World Intellectual Property Organization
International Bureau

(43) International Publication Date
25 January 2007 (25.01.2007)

PCT

(10) International Publication Number
WO 2007/010510 A2

(51) International Patent Classification: Not classified

(21) International Application Number:
PCT/IB2006/052981

(22) International Filing Date: 28 August 2006 (28.08.2006)

(25) Filing Language: English

(26) Publication Language: English

(30) Priority Data:
PCT/IB2006/000772 3 April 2006 (03.04.2006) IB

(71) Applicant and
(72) Inventor: **MAYER, Michael** [AT/CA]; 25 Westmount Road North, Unit 905, Waterloo, Ontario N2L5G7 (CA).

(74) Agent: **SPIERENBURG, Pieter**; Spierenburg & Partner AG, Patent- und Markenanwälte, Mellingerstrasse 12, CH-5443 Niederrohrdorf (CH).

(81) Designated States *(unless otherwise indicated, for every kind of national protection available)*: AE, AG, AL, AM, AT, AU, AZ, BA, BB, BG, BR, BW, BY, BZ, CA, CH, CN, CO, CR, CU, CZ, DE, DK, DM, DZ, EC, EE, EG, ES, FI, GB, GD, GE, GH, GM, HN, HR, HU, ID, IL, IN, IS, JP, KE, KG, KM, KN, KP, KR, KZ, LA, LC, LK, LR, LS, LT, LU, LV, LY, MA, MD, MG, MK, MN, MW, MX, MY, MZ, NA, NG, NI, NO, NZ, OM, PG, PH, PL, PT, RO, RS, RU, SC, SD, SE, SG, SK, SL, SM, SV, SY, TJ, TM, TN, TR, TT, TZ, UA, UG, US, UZ, VC, VN, ZA, ZM, ZW.

(84) Designated States *(unless otherwise indicated, for every kind of regional protection available)*: ARIPO (BW, GH, GM, KE, LS, MW, MZ, NA, SD, SL, SZ, TZ, UG, ZM, ZW), Eurasian (AM, AZ, BY, KG, KZ, MD, RU, TJ, TM), European (AT, BE, BG, CH, CY, CZ, DE, DK, EE, ES, FI, FR, GB, GR, HU, IE, IS, IT, LT, LU, LV, MC, NL, PL, PT, RO, SE, SI, SK, TR), OAPI (BF, BJ, CF, CG, CI, CM, GA, GN, GQ, GW, ML, MR, NE, SN, TD, TG).

Published:
— *upon request of the applicant, before the expiration of the time limit referred to in Article 21(2)(a)*
— *without international search report and to be republished upon receipt of that report*
— *without classification; title and abstract not checked by the International Searching Authority*

For two-letter codes and other abbreviations, refer to the "Guidance Notes on Codes and Abbreviations" appearing at the beginning of each regular issue of the PCT Gazette.

WO 2007/010510 A2

(54) Title: METHOD AND DEVICE FOR WIRE BONDING WITH LOW MECHANICAL STRESS

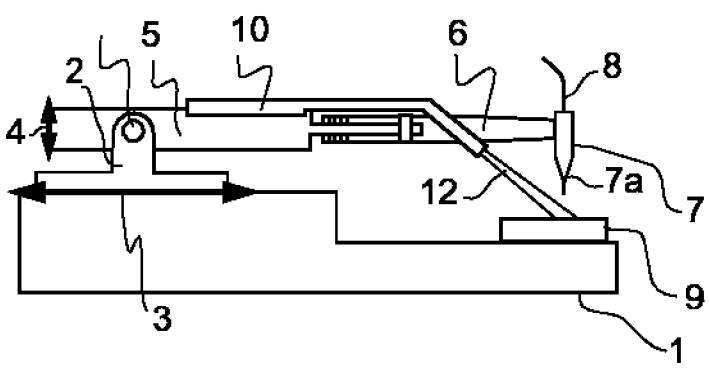

(57) Abstract: A novel wire bonding system for bonding a wire to electronic components is described, which comprises a frame (1), a bond head (7) being connected to the frame and being movable by means of positioning elements (3, 4), and a bond site cleaning device (10, 11) mounted to the frame and adapted to emit an energy beam (12) towards a surface of the electronic component for cleaning from contaminants. The bond site cleaning device (10, 11) is mounted such that the energy beam (12) is directed in an angle towards the site of the electronic component to be immediately bonded to the wire, whereby the beam spot on the site is lying underneath the bonding head (7).

Method and device for wire bonding with low mechanical stress

The invention is related to a method and a device for wire bonding according to the preamble of claim 1.

BACKGROUND

Wire bonding is a common production process in the electronics industry and is known from the book “Wire Bonding in Microelectronics: Materials, Processes, Reliability, and Yield” by George G. Harman (ISBN 0-07-032619-3). The equipment used to carry out wire bonding is called a wire bonder. It is used to connect two or more parts with a wire. Wires and parts are usually metals. The parts are referred to as the bond material. Each part has at least one contact site which is also referred to as bond location, bond site, bond position, bond pad, bonding pad, pad, or connection point. The parts can be e.g. the metallization of a micro-circuit, a piece of metal already bonded to a micro-circuit, the metallization of a printed circuit board, the metallization of a multi-chip module, a part of a lead frame, a feed-through pin of a transistor-outline package, or others. The process to attach one wire loop is referred to as the wire bonding cycle. This process uses a mechanical bonding tool, mostly with a capillary hole, to lead a wire end to the first contact site and attach (bond) it there, form a wire loop, attach the end of the loop to a second contact site, and break the excess wire at a location close to the bonded loop. Alternatively, at least one additional loop is formed with an additional bond before breaking the wire.

Two variations of wire bonding are mainly used in the microelectronics industry. They are ball bonding as described e.g. in patents US 6,477,768 B1, US 3,643,321, and US 4,098,447, and wedge bonding as described e.g. in patents US 3,444,612 and US 4,619,397. The wires used in wire bonding usually have a circular cross section. Wires with a flat cross section are called ribbons and are known from the patent US 5,054,680. Ribbons are processed with wedge bonders only. Wires are usually made of Au, Al, or Cu, and metallization layers are usually made of Au, Ag, Al, Cu, or Pd. The wire and metallization usually are covered by contamination layers and possibly by oxide layers.

The wire bonder consists of several components including a frame that holds a bond head and a system that handles and heats the bond material. The bond head is one of the main components of a wire bonder, comprising a wire guidance system leading the wire from a wire source through the air via the wire clamp to the bonding tool. In ball bonding, the bond head comprises an electrode to produce an electrical arc that melts the wire end, the material of which then solidifies in the shape of a ball with a diameter of typically 150% of that of the wire. The bond head comprises a three-dimensional motion system, i.e. the three mechanical degrees of freedom (DOFs), to allow for the movement of the wire tool and the wire end towards the bonding surface. The horizontal direction of the loop is defined by the line intersecting with the two points defined by the two horizontal (X- and Y-) coordinate pairs of the first and next contact sites, respectively. Due to the rotational symmetry of the tool used on a ball bonder, the bond head does not need to be turned to the horizontal loop direction to bond the loop. The horizontal movements of the three-dimensional motion system are produced by an XY-stage or the movement system described in US 6,460,751 B1. The vertical movement is facilitated by either a cantilever design with a pivot point or by a linear guide. In ball bonding, the first bond of a loop is called the ball bond, and any following bond is called a crescent (or stitch) bond.

In wedge bonding the tool is not rotational symmetric and a fourth axis is needed to turn the bondhead or bond material to position it towards the direction of the following loop prior to bonding it. A wedge bonder has four DOFs. An ultrasonic system is included on the bondheads of both, ball and wedge bonders, to allow for ultrasonic welding.

The described components allow the production of wire loops attached to at least two points of one or more surfaces of one or more parts, eg. chips or substrates. The bondhead also comprises an optical system used to align the tool with the contact sites.

In order to achieve wire bonds of a predetermined and high enough quality, an adequate set of values of physical and/or technical factors is chosen. The main factors influencing the wire bonding process are the velocity of the tool approaching the bond site, the applied impact force, the applied bonding force, the applied ultrasonic power or amplitude, duration of ultrasound and/or force application, and the temperature to which the bond material is heated.

During bonding, plastic wire deformation and interfacial bond formation take place, and forces are exerted to the interface. The application of such forces to advanced products can conflict with limitations as described in the following. During bonding, stress fields are generated in the metallization and in the material below the metallization. These stress fields can destroy dielectric layers as they are recently developed for integrated circuits on micro-chips for increased performance. To avoid layer damage, the process factors have to be adapted which usually leads to a reduction of the bond quality. Some other applications use copper as a wire material which is harder and induces even higher stress than gold wire. Such copper wires are difficult to be used on delicate micro-chips as the layers of the integrated circuit can be damaged. The industry needs methods to overcome these limitations in wire bonding.

There are various methods of surface preparation to remove oxides and contamination to achieve unusually high degrees of surface cleanliness that allow to modify the set of bonding process factors in a way that they produce less mechanical stress while the final bond quality is high enough. A method with a cleaning laser is described in the scientific paper “Laser removal of oxides and particles from copper surfaces for microelectronic fabrication” by J. M. Lee and K. G. Watkins, published in 2000 in OPTICS EXPRESS, Vol. 7, No. 2. Other laser cleaning methods are know from the patents US 5,151,134, US 5,389,761, and US 5,977,512. The application of a laser for cleaning prior to wire bonding is described in the patent publications JP 2000-286287-A, JP 2001-068499, and JP 2003-133356, and the patent application US 2005/0184133 A1. Cleaning the bonding surface and with laser light prior to bonding allows to modify at least one of the process factors to reduce stress in order to achieve sufficient bond strength.

OBJECT OF THE INVENTION

It is an object of the present invention to provide a wire bonding system and a wire bonding method for achieving strong wire bonds while keeping mechanical stresses in the substrate extremely low, at a low process time and a low process temperature.

SUMMARY

This object is achieved by means of a wire bonding system as claimed in claim 1 and a wire bonding method as claimed in claim 7.

In accordance to the wire bonding system and the method for wire bonding of the present invention the following steps are provided:

A preshaping process may be inserted in the existing wire bonding cycle. Prior to bonding, the tool with the wire end is moved towards a flat preshaping surface in order to prepare for a preshaping action. The tool is moved towards the surface until it impacts with the wire between tool and surface. The force experienced by the wire during the impact preshapes the wire by plastic deformation, thereby producing a flat wire underside that will serve as the contact area for the bond to the component. Care is taken not to bond the wire to the preshaping surface. This is achieved by not using any ultrasonic energy during the preshaping process step. The tool with the wire is retracted from this surface and is positioned above the first bond location. Now the bond position and the flat wire underside are cleaned in accordance with the invention by using a cleaning device that is mechanically fixed at a constant position relative to the tool and that produces an energy beam, e.g. a laser beam, and its reflection. The beam is irradiated at an angle onto the bond location, and reflected from the bond location onto the flat wire underside, thereby cleaning both the bond site and the flat contact area of the wire. However, cleaning can also be provided without previously preshaping the underside of the bond wire.

The tool with the wire end is then pressed to the bond site using adequate force. While pressing, the wire end is bonded to the bond site using adequate ultrasonic energy for a predetermined time period.

The wire bonding cycle is continued as usual by forming at least one wire loop, and at least one subsequent bond connection. In accordance to the invention clean surfaces are produced which subsequently are bonded with a lower mechanical force and less ultrasonic energy.

Depending on the specific application, one or more of the following variations may be preferred:

For cleaning, a continuous light source can be used instead of a pulsed light source. A light source other than a laser can be used. The light source can emit light with a wavelength that is reflected by dielectric layers. A plasma torch instead of a light source can be used. More than one cleaning device can be installed on the wire bonder for more efficient cleaning of the bonding partners.

Regarding the installation of a cleaning device on the bondhead, it can be mechanically fixed at a constant position relative to the bond location or the alignment camera. The cleaning device has at least two positioning elements at two (perpendicular) motional DOFs allowing for movement and thereby position adjustment relative to the capillary tip.

The preshaping location can be the bond position, it can be on a surface that is moved below the wire end by a special mechanism, e.g., on a retractable electrode as it is used for electrical flame off (EFO), or it can be any predefined location on the bond material or anywhere on any wire bonder component.

The reflection surface can be a contact site, an extension of the contact site, a contact site extending the wire contact diameter by at least half a contact area diameter, a metallization layer different from the contact site metallization layer, or a metallization layer covered by a dielectric layer.

BRIEF DESCRIPTION OF THE DRAWINGS

The invention will now be described in greater detail, by way of example, with reference to the accompanying drawings, in which:

Figs. 1A and 1B show a side view and a top view of a wire bonder, respectively,

Figs. 2A and 2B show wires bonded to different components,

Fig. 3 shows the geometrical location of a beam, the front end of a bonding tool, and a bond material surface with metallization,

Figs. 4A, 4B and 4C show the steps of preshaping of a bond wire,

Figs. 5A and 5B show the steps required for cleaning of a bond metallization area of the component and the underside of the bond wire,

Fig. 6 shows the front end of the bonding tool pressing the wire end to the component,

Figs. 7A to 7E show the steps of cleaning the metallization, preshaping, cleaning and bonding a bond wire,

Figs 8A to 8E show similar steps as in Figs 7A to 7E for a wedge bonder process,

Fig. 9 shows the use of a beam for simultaneously cleaning the bond wire underside and the top surface of the component.

PREFERRED EMBODIMENT / DETAILED DESCRIPTION

In the figures the same reference numbers are used for the same elements and the description applies to all figures unless mentioned otherwise.

A preferred embodiment of the invention consists of a wire bonder with all existing modules needed for wire bonding. Some important parts of this embodiment are illustrated in Figures 1A and 1B showing a side view and a top view of the wire

bonder, respectively. In particular, the wire bonder consists of a frame 1 holding an XY-table 2 with two positioning elements at two degrees of freedom DOFs 3, i.e. in X-direction and in Y-direction, respectively. A Z-motion system with one DOF 4 in Z-direction is attached to the XY-table. The Z-motion system moves a cantilever 5 that holds an ultrasonic transducer 6. This transducer 6 holds a bonding tool or bond head 7 which is used to lead a bonding wire 8 by means of the front end of the tool 7b (tool tip) to a bonding material or electronic component 9. The XY-table 2 and the Z-motion system enables the wire bonder to move the tool 7 to any position relative to the bonding material 9 and, in particular, bring the tool tip with the wire 8 into contact with the bonding material 9.

In the preferred embodiment as depicted in Figures 1A and 1B, the wire bonder comprises two cleaning devices 10 and 11, one located to the left of the transducer 6 and the other to the right. The cleaning devices 10 and 11 produce two cleaning beams 12 and 13 which can be directed towards the bond area on the bond material 9 by means of two positioning devices 14 and 15 for two different DOFs between the cleaning device 10 and 11, respectively, and the tool 7 allowing for adjustment of the cleaning beam location. Each cleaning device comprises a laser diode with the following typical specifications: emission wavelengths between 400 nm and 1600 nm, maximum output power of typically 30 mW, beam durations of between 1 ns and 1000 ns to produce beam pulses, and a pulse repetition rate of a least 500 Hz. Such a laser diode is offered by Hamamatsu Corporation, Bridgewater, NJ, USA, under type number L7060-02. In combination with the laser diode, each cleaning device also comprises a suitable set of optical elements, including lenses, prisms, mirrors, frequency-doubling crystals, and optical fibres, and any other devices that allow for adjustment of the beam wavelength, focus, and diameter. In the preferred embodiment, a diode laser 15a is mounted close to the positioning device 15 and the beam is parallelized with a set of lenses 15b, and directed to the contact site with a mirror 15c. Similarly, a set of identical optical components are mounted close to the positioning device 14 on the left hand side as shown in Fig. 1B. Alternative other laser systems are those described in US Pat. Application 2005/0184133A1. An alternative cleaning beam is an atmospheric plasma beam as produced by

Plasmapen™, a plasma torch offered eg. by PVA TePla America, Inc., Corona, CA, USA. Values for wavelength, intensity, duration, and number of pulses of the cleaning beam 12 are chosen such as to sufficiently clean the surfaces to which it is applied. If a laser is used, care must be taken that all necessary safety measures are met to protect all personnel from the energy beam.

The aforementioned wire bonder facilitates bonding of a component or bond wire 16 to another component 17, as illustrated in Fig. 2A. However, the component 16 may also be bonded to a further component 18, thereby connecting the components 17 and 18. Typically, the bonding material is an assembly of a chip 19 and a substrate or leadframe 20, each of which has dedicated bonding locations covered by a metallization layer 21, as illustrated in Fig. 2B.

With respect to Fig. 3 the steps required for the adjustment of the beam with respect to the metallization layer 21 of the bond material 9 are described. Based on the wire diameter, the tool tip geometrical extension, the bond pad pitch chosen for the respective application, and further process settings a maximum diameter 22 of the metallization area needed to attach the wire is determined. A distance D between the expected thickness 23 of the plastically deformed wire end and the metallization layer 21 is defined not less than the maximum diameter 22. A typical value for D is 70 µm for an application when balls are bonded on pads pitched at 80 µm. In the case of crescent bonding, the value of D is chosen at least as large as the total crescent bond area (TCBA), ie. the area on the metallization where the wire could be bonded, disregarding the horizontal direction of the wire loop. A good estimate of the diameter of the TCBA is the nominal diameter of the tool tip 22a as specified by the tool supplier. A typical value of D is 120 µm for a crescent bond application. If the cleaning beam is used for both types of bonds of a ball bonding process, ie. the ball and the crescent bond, a distance D is determined which is equal or larger than both, the maximum diameter of the ball bond area and the maximum diameter of the TCBA. The beam angle α is defined as the angle between the beam 12 direction and the horizontal plane (X-Y plane). The value of α is chosen as large as possible provided the tool tip does not obstruct

the beam. A typical value is α = 37°. The diameter of the cleaning beam 26 is chosen D times sinα or larger.

The beam location is adjusted by the following steps. After adjusting or calibrating the wire bonder in the usual way, including the calibration of the tool tip Z-height with respect to the surfaces of the bond materials, the wire bonder is programmed to move the tool 7 towards the bond location and stop at a distance above the bond location which is the sum of D and the expected plastically deformed wire thickness 23, which is typically 15 µm if 25 µm diameter wires are used. The beam 12 then is switched on and its location is adjusted by displacing set screws that move the cleaning device 10 along the two DOFs 14, i.e. X-direction and Y-direction. Optionally a pair of DOFs in the Y- and Z-directionand a pair of DOFs in the X- and Z-direction are provided. The adjustment is finished when all of the bond area on the metallization layer 21 is irradiated by the beam 12. The same method is used to adjust the location of the second beam. During production, bonding tools are changed as a matter of routine, resulting in a difference of the new tool tip location compared to that of the old tool tip. Therefore, the cleaning beam location should be adjusted after each such change. After adjustment of the cleaning device, the bonding wire 16 is inserted into the tool 7. The cleaning device 10 is in a fixed mechanical connection with the tool 7 and therefore moves over the same distances as the tool, both relative to the bonding material 9, using the positioning elements 3 and 4 as shown in Fig. 1, for the movements.

Figures 4A, 4B, and 4C show the steps required for the preshaping of the wire 8 for the case of ball bonding. In the preferred embodiment, the wire bonder has a flat plate, the surface of which is used for a preshaping operation. The surface of the plate is perpendicular to the vertical direction. A mechanism allows to place the plate between the tool and the bond location. The electrical flame-off electrode needed for ball bonding can be manufactured as a flat plate. Such electrodes are e.g. described in US 6,739,493. A mechanism allows to place the electrode below the tool. The wire end is preshaped by first placing it above the surface 24 as shown in Fig. 4A, vertically moving it towards the surface 24, and impacting the tool 7 with the wire end 8 on the surface 24 with an impact force high enough to

obtain plastic deformation of the wire, as shown in Fig. 4B. After this, the tool 7 with the wire 8 is moved up again, as shown in Fig. 4C. The plastic deformation results in a flat underside of the wire 25. Alternatively, the preshaping surface 24 is the bond location or any location on the bond material or the wire bonder.

Figures 5A and 5B show the steps required for the cleaning of the bond metallization area 21 and the bond wire underside 25 for the case of ball bonding. In the preferred embodiment, the tool 7 moves the preshaped wire 8 vertically towards the expected bond position. Once the Z-distance (vertical distance) of the wire underside to the expected bond position reduces to approximately D, the cleaning beam 12 is switched on, as shown in Fig. 5A. The cleaning beam 12 is irradiated onto the bond location, covering and cleaning the entire bond area. In the preferred embodiment, the cleaning is provided by means of two beam pulses that are shot during 1 millisecond while the tool passes the distance D. The duration of a typical pulse is 100 nanoseconds or less, and the peak power of a typical pulse is 30 Watt. Optionally, the cleaning is performed while the wire is held at a constant distance D for a predefined time period, T. Such optional stopping periods for cleaning last typically 2 milliseconds, after which the wire bonder moves the tool 7 with the wire end to a second cleaning location at a distance from the bond location 29 of approximately one half D, as shown is in Fig. 5B. A minimum metallization area is provided with a diameter, D_M, to allow for complete reflection of the cleaning beam 12. The values for D and D_M are chosen in a way where their ratio D/D_M equals 0.5 or less. Thereby, the bonding metallization extends beyond the minimum required bond area by a distance 27 of at least half of D. This extended metallization area 21 reflects the cleaning beam 12. The reflected beam 28 is completely covering and cleaning the underside 25 of the bond location of the wire. Optionally, a stopping period is observed while the wire is held at a distance 29 that is typically half of D. As an alternative, the cleaning of the underside 25 can be performed in a similar way just after the preshaping operation, using the beam reflected from the preshaping surface.

Preferably the steps of cleaning the bond area and of cleaning the wire end both take place while the wire end moves towards the bond location and before the wire

touches the metallization layer (touchdown). Once the wire end touches the metallization layer, as shown in Fig. 6, the impact is detected with a known sensor mechanism. Then, the wire bonder presses the wire 16 to the bonding position with an adequate force, and applies an adequate value of ultrasonic energy and for a predetermined period of time to form a metallic bond between wire and metallization layer.

If the invention is applied to ball bonding, and in particular to any bond of the bonding cycle that follows the first bond, ie. if the invention is applied to a crescent bond, the necessary steps are described in the following. After the first bond operation, the tool 7 and wire 8 are moved along an existing trajectory to a search height 30 above the expected location of the next bond location 31 as shown in Fig. 7A. Figures 7B and 7C show the steps of preshaping the wire. The preferred preshaping location is the bond location 31. The wire 8 is preshaped by impacting it onto the bond location surface with an impact force high enough to obtain plastic deformation of the wire 8, as shown in Fig. 7B that reduces the wire thickness to approximately 70% to 50% of the original thickness. The plastic deformation of the wire 8 results in a flat underside 33 of the wire.

Figures 7C and 7D are showing the steps required for the cleaning of the bond metallization 31 and the bond wire underside 33. After the preshaping step, the tool moves the preshaped wire 8 upward from the bond position. One millisecond or less before the distance from the wire underside 33 to bond position 31 reaches approximately 50% of D distance 34b, the cleaning beam 12 is switched on, as shown in Fig. 7C. Optionally, a stopping period is observed. To allow beam reflection, the contact site is selected in a way that the bond metallization layer extends the bond area 34 by a distance 34c of at least 50% of D 34b. The metallization is cleaned by the cleaning beam 12 with a diameter 26 of D times $\sin\alpha$ or larger and subsequently reflects the cleaning beam. The reflected beam 28 is completely covering and cleaning the underside 33 of the wire end for all possible horizontal orientations of the wire end like the position of the wire 8b drawn with dashed lines. The tool 7 and cleaning device 10 continue to be moved upwards with the wire until distance D is reached as shown in Fig. 7D. The

cleaning beam 12 is irradiated onto the bond location, covering all of the bond area. After an optional stopping period the wire bonder moves the tool with the wire towards the bond location. Optionally, the wire underside is cleaned during this descent movement simultaneously while cleaning the bond location, the cleaning being carried out in the same way as shown in Fig. 7C. Before the wire end reaches the metallization layer, the beam 12 is switched off. Once the wire end reaches the metallization layer, the impact is detected with an usually known mechanism. Then, the wire bonder presses the wire to the bonding position with an adequate force, and applies an adequate value of ultrasonic energy and for an adequate period of time to form a metallic bond between wire 8 and metallization layer 31, as shown in Fig. 7E. From this, the wire bonder either proceeds with bonding at least one additional bond, or it breaks the wire using one of the generally known methods.

Alternatively, the wire is not preshaped. Further, the wire and tool may be those in a known wedge bonding process which is illustrated in Figs. 8A to 8E. The front end of the tool 7 holds the wire 8 by means of a short capillary hole. The wire end is located below the tip 7 as shown in Fig. 8A and pressed to a preshaping surface 42 which optionally is the bond location, as shown in Fig. 8B. On a wedge bonder, preferably only one cleaning device 41 is mounted with its position fixed with respect to the front end of the tool 7. This cleaning device 41 is mounted in a way that it will produce a cleaning beam 40 which is below the tip of the tool 7 directed essentially parallel to the wire loop direction. The cleaning and bonding process then is carried out analogously to those described for the ball bond and crescent bond processes.

Alternative locations for a cleaning device are on the XY-table without being connected to the Z-motion system. In such an alternative wire bonding device, the bond area is cleaned prior to touchdown at any given Z-position of the tool.

Another embodiment of the wire bonding device is illustrated in Fig. 9. In this embodiment, the bond location 21 and the flat wire underside 25 are cleaned

simultaneously using a cleaning beam 12 and its reflected beam 28, respectively. The preferred diameter of the cleaning beam is two times D times sinα.

Claims

1. A wire bonding system for bonding a wire to electronic components comprising a frame (1), a bond head (7) being connected to the frame and being movable by means of positioning elements (3, 4), and a bond site cleaning device (10, 11) mounted to the bond head and adapted to emit an energy beam (12) towards a surface of the electronic component for cleaning from contaminants, characterized in that the bond site cleaning device (10, 11) is mounted such that the energy beam (12) is directed in a non-perpendicular angle towards the site of the electronic component to be immediately bonded to the wire, whereby the beam spot on the site is lying underneath the bond head (7).

2. A wire bonding system according to claim 1, characterized in that the cleaning device (10, 11) is mounted to a suspending part (5) of the bond head (7) by means of a positioning device (14, 15) for adjusting the beam spot with respect to the lower end of the bond head.

3. A wire bonding system according to claim 1 or 2, characterized in that the cleaning device (10, 11) is adapted to be automatically shifted between a first position at which a flat underside of the bond wire is cleaned by the energy beam reflected from the surface of the electronic component to be bonded and a second position at the immediate bond site of the electronic component to be cleaned before bonding.

4. A wire bonding system according to claim 3, characterized in that the bond head fixing the end region of the bond wire is adapted to be moved to and fro a flat surface (24) facing the bonding head (7) in order to flatten the end region of the bond wire onto the flat surface before cleaning and bonding.

5. A wire bonding system as claimed in one of claims 1 to 4, characterized in that two cleaning devices (10, 11) are provided at two locations of the bond head and each cleaning device is mounted such that its energy beam is directed to the same beam spot on the surface of the electronic component.

6. A wire bonding system as claimed in claim 5 where the two cleaning devices are provided at opposite sides of the bond head (7).

7. Method for bonding a bond wire to an electronic component by means of a wire bonding system as claimed in one of claims 1 to 6, wherein the surface of the electronic component is cleaned by an energy beam before bonding, characterized in that the immediate bond site of the electronic component is cleaned by the energy beam directed in a non-perpendicular angle towards the surface underneath the bond head, and the bond wire is bonded to the cleaned surface of the electronic component.

8. Method for wire bonding as claimed in claim 7, characterized in that the bond wire is deformed before bonding by moving the bond head to and fro a flat surface (24) such that a region of the bond wire is flattened by plastic deformation.

9. Method for wire bonding as claimed in claim 7 or 8, characterized in that the surface (24) is a surface of the electronic component.

10. Method for wire bonding as claimed in one of claims 7 to 9, characterized in that the energy beam is directed at a position onto the surface (24) such that the energy beam is reflected towards the end region of the bond wire, in order to clean said end region, and the bond wire is subsequently bonded to the electronic component.

11. Method for wire bonding as claimed in one of claims 7 to 10, characterized in that the energy beam is firstly directed at a first position onto the flat surface (24) such that the beam is reflected to the end region of the bond wire, in order to clean said end region, and secondly the energy beam is directed at a second position to the bond site on the surface (24) before bonding the bond wire to the electronic component.

12. Method for wire bonding as claimed in one of claims 7 to 11, characterized in that cleaning is provided by two energy beams emitted from cleaning devices (10, 11) at both sides of the bond head (7).

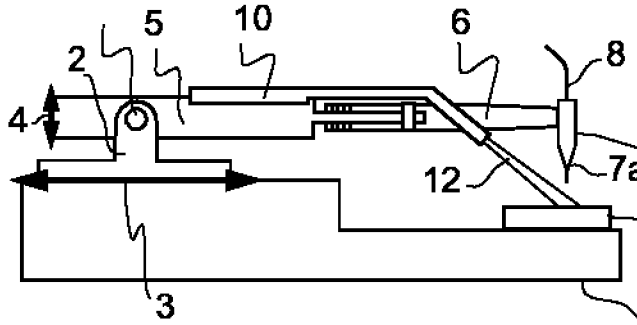

FIG. 1 A

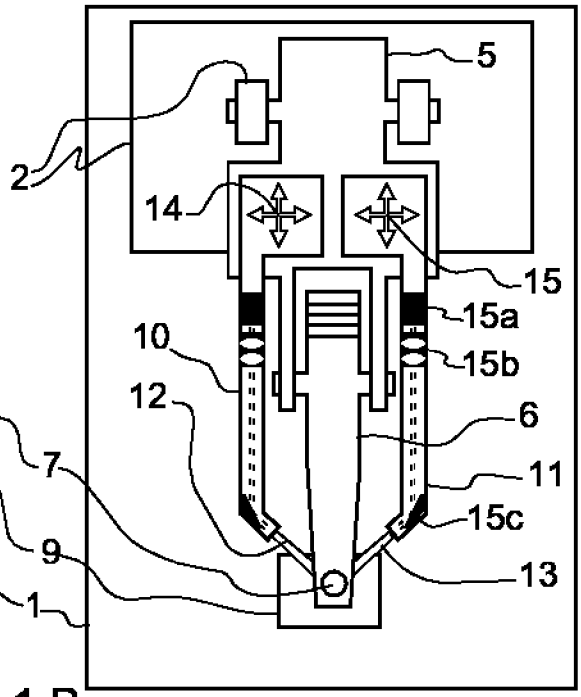

FIG. 1 B

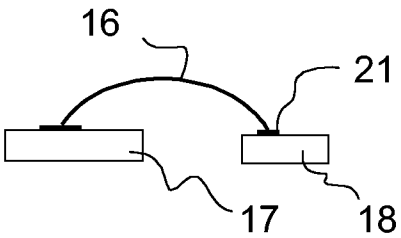

FIG. 2A

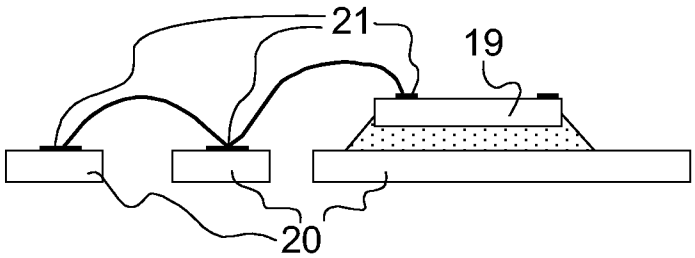

FIG. 2B

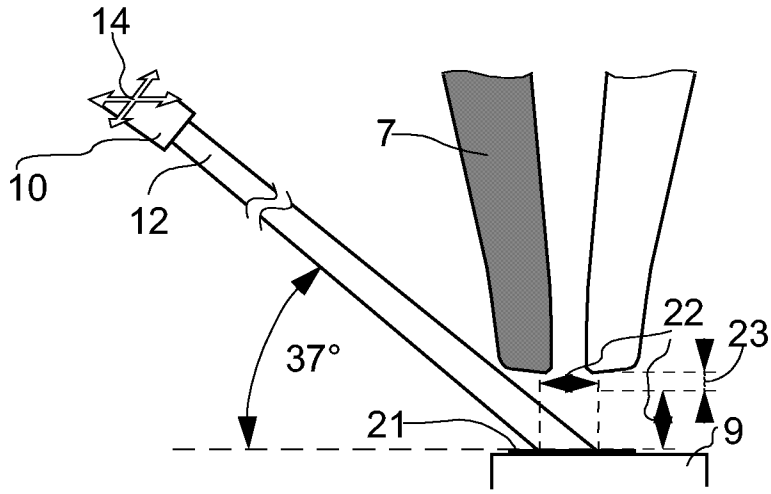

FIG. 3

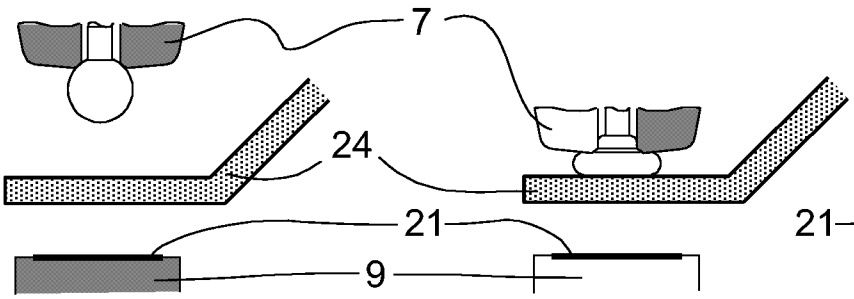

FIG. 4A

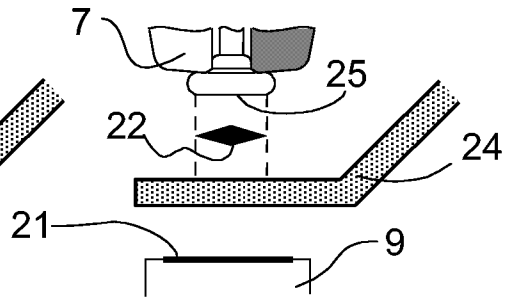

FIG. 4B FIG. 4C

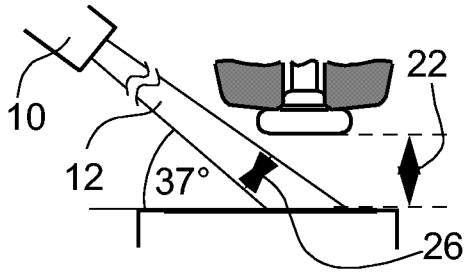

FIG. 5A

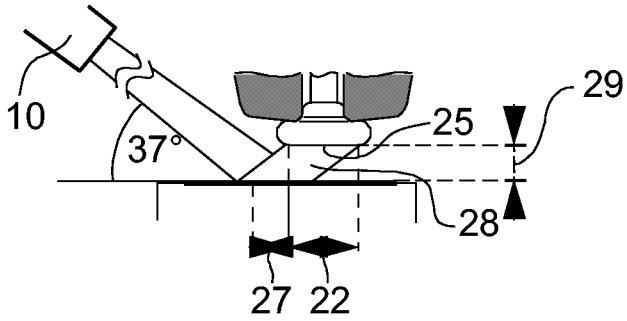

FIG. 5B

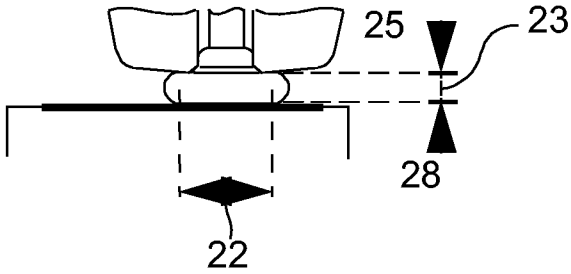

FIG. 6

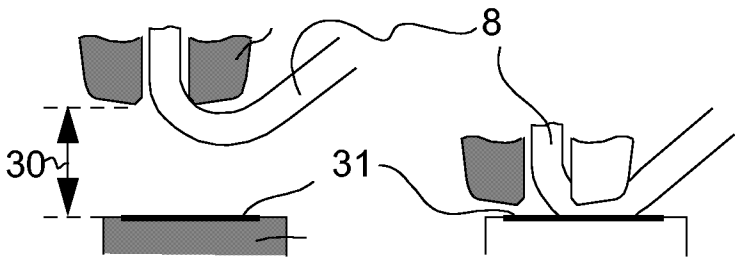

FIG. 7A

FIG. 7B

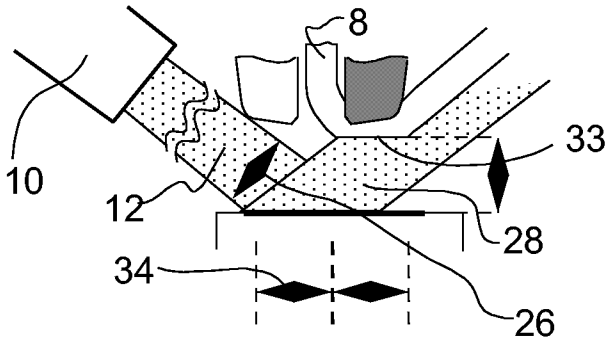

FIG. 7C

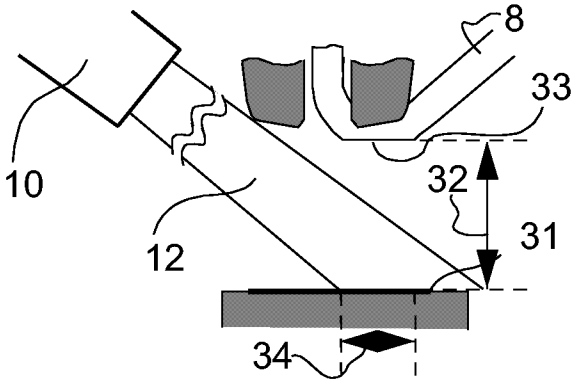

FIG. 7D

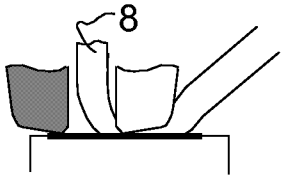

FIG. 7E

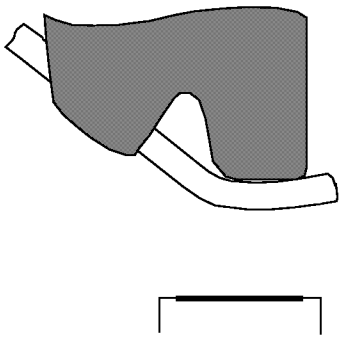

FIG. 8A

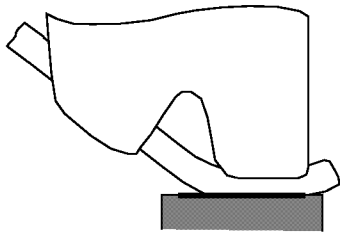

FIG. 8B

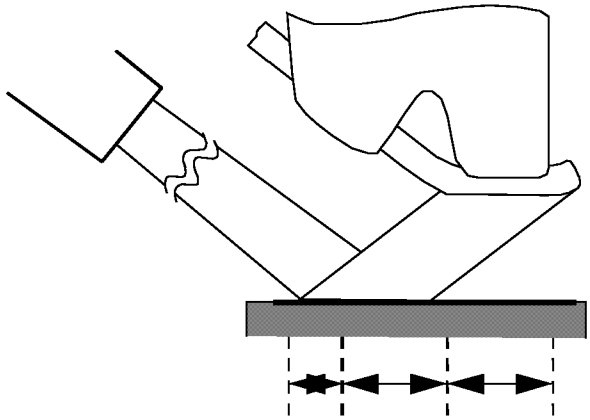

FIG. 8C

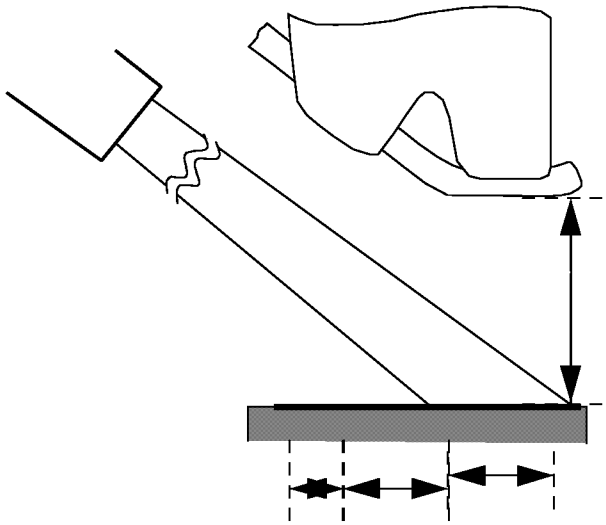

FIG. 8D

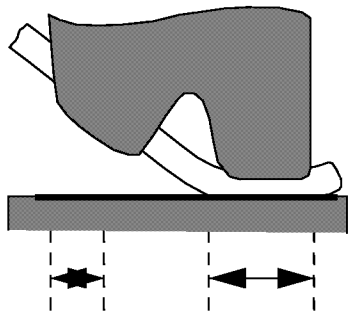

FIG. 8E

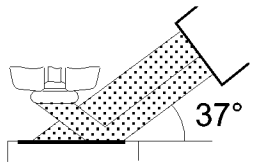

FIG. 9

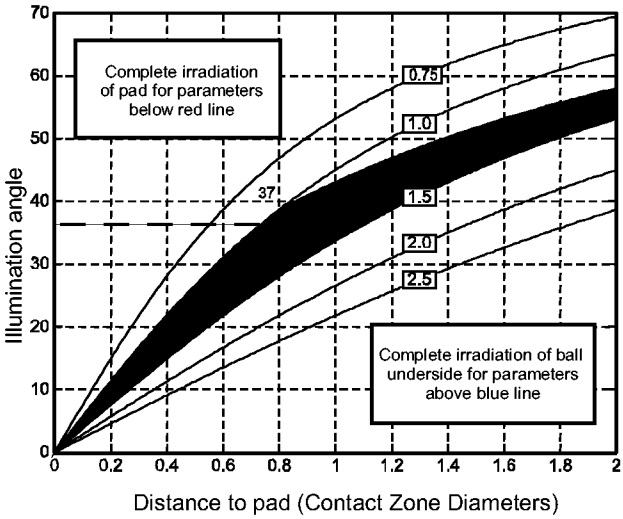

FIG. 11

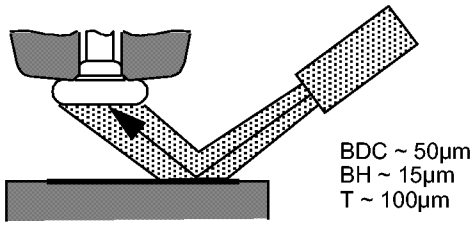

FIG. 10