G. W. DICKEY.

RAIL JOINT SUPPORT.

APPLICATION FILED DEC. 18, 1912.

1,068,419. Patented July 29, 1913.

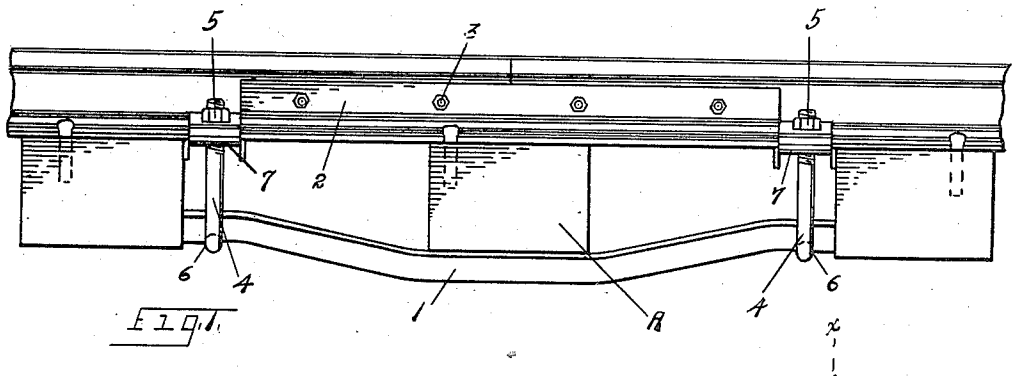

FIG. 1.

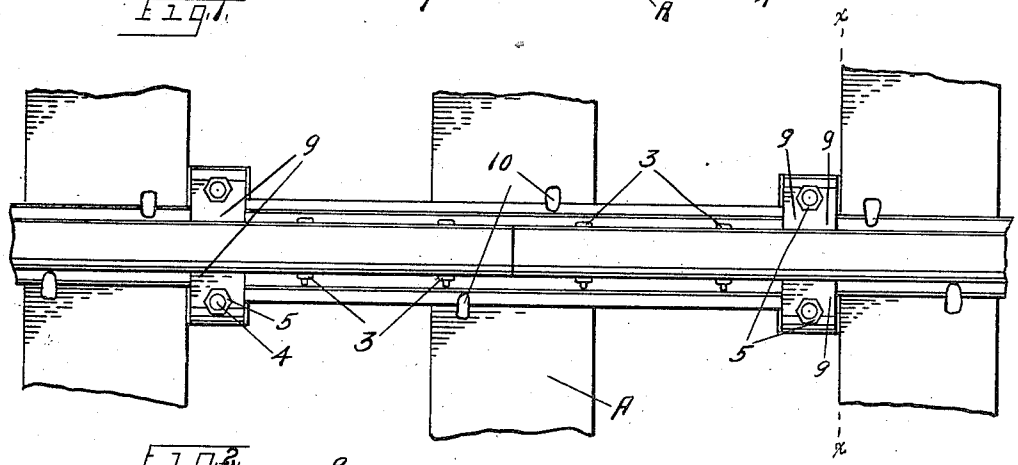

FIG. 2.

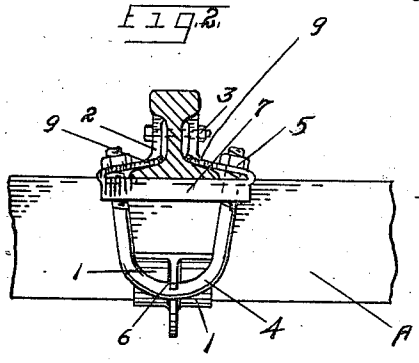

FIG. 3.

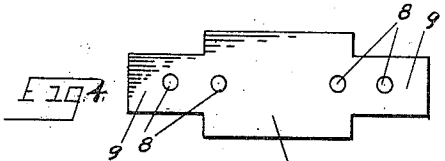

FIG. 4.

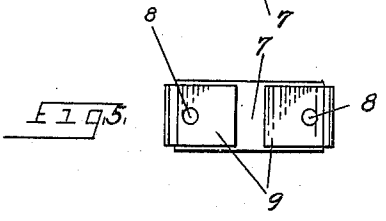

FIG. 5.

WITNESSES:

F. W. Thomas.

W. W. Barton

George W. Dickey

INVENTOR.

BY J. M. Thomas

ATTORNEY.

COLUMBIA PLANOGRAPH CO., WASHINGTON, D. C.

UNITED STATES PATENT OFFICE.

GEORGE W. DICKEY, OF SALT LAKE CITY, UTAH.

RAIL-JOINT SUPPORT.

1,068,419. Specification of Letters Patent. Patented July 29, 1913.

Application filed December 18, 1912. Serial No. 737,545.

To all whom it may concern:

Be it known that I, GEORGE W. DICKEY, a citizen of the United States, residing at Salt Lake City, in the county of Salt Lake and State of Utah, have invented certain new and useful Improvements in Rail-Joint Supports, of which the following is a specification.

My invention relates to rail joint supports, and has for its object to provide a truss support for a rail joint which will prevent the springing of the end of railway rails at the joint when the rolling stock is passing thereover, and stop the tendency of said rails from spreading, rolling or creeping, and by means of which the meeting ends of railway rails are held firmly together in order to prevent the breaking and battering of rail ends, angle bars and bolts.

A further object is the production of a device by means of which the tie under the joint is firmly supported, and the ends of the rails reinforced sufficiently to permit the wave motion to pass through the joints and to prevent oscillation or pounding.

A further object is to provide a device by means of which the rail joints are held in perfect alinement and to prevent the lateral movement of the track on slopes, and around curves.

These and other objects which will be apparent I accomplish with the device illustrated in the accompanying drawings, in which similar letters of reference indicate like parts throughout the several figures, and as described in the specifications forming a part of this application, and pointed out in the appended claims.

Figure 1 is a side elevation of my device in place at the meeting ends of two rails. Fig. 2 is a plan view of the same, with portions only of said rail and ties being shown. Fig. 3 is a transverse section on line *x x* of Fig. 2. Fig. 4 is a plan of the rail clips of my support as cut from a sheet of steel before it is bent into form. Fig. 5 is a plan view of the same after it is bent into form.

It is well known that when heavy rolling stock is passing over a track the ends of the rails where the joint occurs will be sprung downward by wheel pressure and the rail carrying the load will be depressed at the joint and the contiguous end of the receiving rail will remain in horizontal position, and when the wheels of the passing car or engine strike the said contiguous end there is a jar to the passing vehicle, a wear on the end of the rail so struck, and a loosening of the angle bars holding the rails together. At the same time the blow on the end of the receiving and unburdened rail will have a tendency to move it longitudinally and cause the creeping of the rails. This tendency to creep is also aided by the lever action of the ends of the depressed rails when the joint opens however slightly at the base of the rails, and my purpose is to supply a truss support at and under the joint of the rails which will not produce what is known as an "anvil joint," but will prevent the uneven depression of the rails at the joint and the consequent jar, wear and creeping. To accomplish these objects I fasten under the rails at the meeting joint a tie A, and other ties as are desired thereunder. Said rails are secured together by the usual angle bars 2 one on each side thereof and having holes therethrough in alinement with the holes in the end portions of the rails and through which the usual bolts 3 are fastened. As a support for the end portion of said tie A and of said rails a metal truss bar 1 is secured below and vertically parallel with said rails. Said truss bar is T-shaped in cross section and bent upward in order that the ends thereof will abut against the sides of the two ties adjacent the said joint tie A, and the intermediate portion will contact with the under side of said joint tie. Each end of said bar 1 is held in place by means of a U-shaped bolt or clamp 4, which is fitted around said bar 1 in a notch 6 cut therein. Said U-shaped clamps 4 have their end portions inserted through rail clips 7 and threaded, and on which threaded portion the nuts 5 are screwed. Said rail clips 7 are cut from sheet steel in the form shown in Fig. 4, with holes 8 therethrough which will register when the end portions of said clips are bent upward and inward toward each other as at 9 to engage the base flange of the rail. The side portions of each clip are bent downward and said clips 7 are so placed on the rails that one side bears against the ends of the angle bars 2 and the opposite side against an adjacent tie. When said nuts 5 are screwed upon said clamps 4, the said truss bar 1 may be given any desired tension and will be firmly held against

the under side of the joint tie A and the two adjacent ties will bear against the ends of said truss bar. The bend in the truss bar 1 will allow the ends thereof to abut against the lower corner of the adjacent ties and will prevent any tendency of said ties to roll when the rails which are spiked thereto creep in either direction. If there should be any creeping of the rails the U-shaped bolts would be gradually turned or worked from off the end of the truss bar if I did not provide the said notches 6 therein. The intermediate portion of said bar forms a depending member on the joint tie, which will be ballasted in the roadbed and hold the track against skidding or sluing. The contacting sides of said rail clips 7 will bear against the ends of the angle bars 2 and will prevent any creeping or longitudinal movement of the rails. Said rails will also be held in the usual way by the spikes 10 being driven into said ties with the heads thereof engaging the base flange of the rails. I thus provide a depending anchor rigidly fastened on the rails that when embedded in the road bed, under the joint tie, will prevent any tendency of the rails to roll, a clamp that will prevent creeping of the rails and a support that will prevent any giving of the joint, and the consequent wearing of the ties.

Having thus described my invention I desire to secure by Letters Patent and claim:—

1. In a rail joint support the combination of a pair of rails, angle bars connecting the ends thereof, a plurality of ties upon which said rails are secured, with a truss bar disposed below the joint tie and upwardly bent to contact with the adjacent ties; and U-shaped bolts inclosing the end portions of said truss bar and secured to said rails.

2. In a rail joint support the combination of a pair of meeting rails, angle bars connecting the ends thereof, and ties upon which said rails are secured, with a truss bar disposed below the end portion of the joint tie and vertically parallel with said rails and provided with a notch in the lower portion near each end; and U-shaped clamps inclosing said truss bar at said notch and secured to said rails.

3. In combination with the meeting ends of two rails and ties thereunder, and angle bars connecting said rails, of a truss bar disposed below the end portion of the joint tie and vertically parallel with said rails and provided with notches near each end; U-shaped clamps inclosing said truss bar at said notches and rail clips engaging the base flange of said rails to which said clamps are secured.

4. In combination with the meeting ends of two railway rails and the ties adjacent said meeting point, of angle bars secured to said rails; rail clips adapted to engage the base flange of the rails; a bar bent to contact with the under side of one of said ties and to bear against the sides of two adjacent ties; U-shaped clamps inclosing said bar and having their ends threaded and inserted through said rail clips; and nuts screwed on said clamps to hold said bar against the under side of said tie and to abut against adjacent ties.

5. In combination with the meeting ends of two railway rails and the ties adjacent said meeting point, of angle bars secured to said rails; a truss bar bent to contact with the under side of one of said ties; U-shaped clamps inclosing said bars, having their ends threaded; and rail clips secured thereon to hold said bar against the under side of the joint tie to support said rails at their meeting point.

6. In combination with the meeting ends of two railway rails and the tie thereunder, of angle bars secured to said rails, rail clips engaging the base flange of said rails and having holes therethrough; a bar bent to contact with the under side of said tie and to abut against the sides of adjacent ties; U-shaped clamps inclosing said bar and having their ends threaded and inserted through the holes in rail clips; and nuts screwed on said clamps to hold said bar against the under side of said tie and said rail clips in gripping contact with the base flange of said rails.

7. In combination with the meeting ends of two railway rails and the tie thereunder adjacent said meeting point, of angle bars connecting said rails, and rail clips cut from a sheet of metal and portions bent to engage the base of said rails and provided with holes therein; a bar bent to contact with the under side of said tie and having notches cut near the ends; U-shaped clamps inclosing said bar in said notches and having the ends threaded and inserted through the holes in said rail clips; and nuts screwed thereon.

In testimony whereof I have affixed my signature in presence of two witnesses.

GEORGE W. DICKEY.

Witnesses:
SAM RANEY,
R. B. MCINTOSH.

Copies of this patent may be obtained for five cents each, by addressing the "Commissioner of Patents, Washington, D. C."